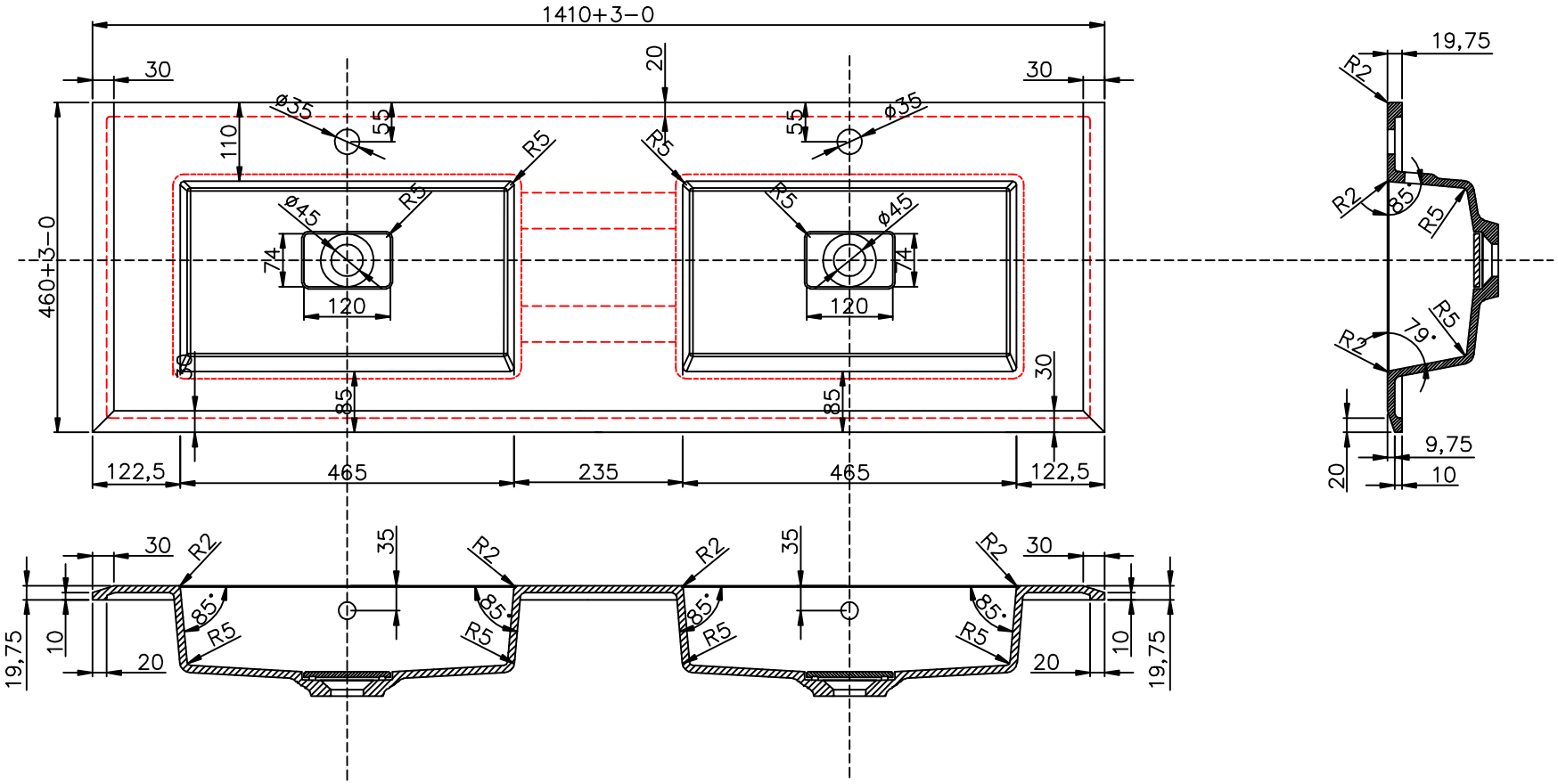

Z1410-D	TITLE		
	DRAWING_NUMBER	EDITION	SHEET