Ausführungsvarianten für Muffe Innenrohr

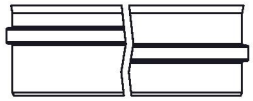

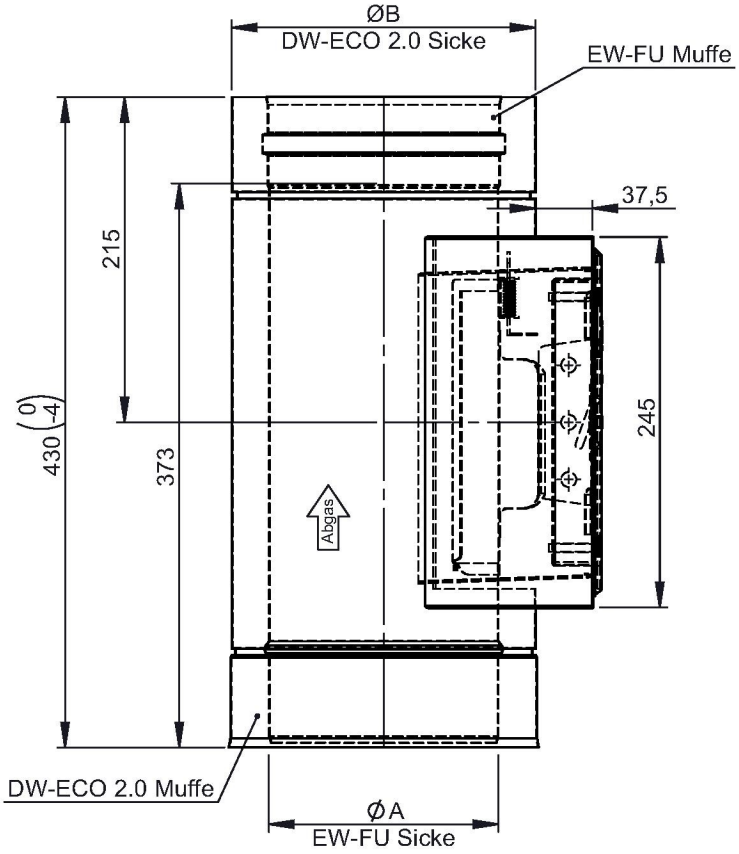

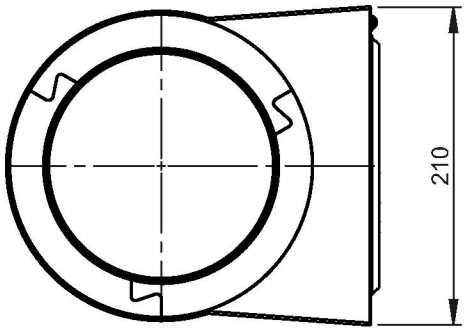

M 1:8 (Ø150)

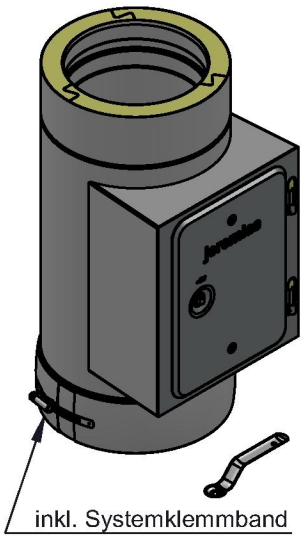

Ø					130	150	160	180
A					130	150	160	180
B					180	200	210	230
kg					4,0	4,4	4,6	4,8

notes:

DIN ISO 13920 Tolerances B

revisions-no. A1 | mm / kg

	date	name
drawn by	24.08.2021	KSA
checked by		
approved by		
modified by	18.01.2022	KSA

jeremias® CHIMNEY SYSTEMS

description: Revisionselement (bis 600°C/N1), eckige Öffnung 210x140mm inkl. Klemmband

code: **215-DWECO10**

drawing-no.: **01-02-35-1650-215**

scale: 1:5

format: A4

sheet: 1 of 1

© jeremias GmbH. All rights reserved, also regarding any disposal, exploitation, editing, distribution, as well as in the event of applications for industrial property rights.