Ausführungsvarianten für Muffe Innenrohr

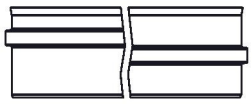

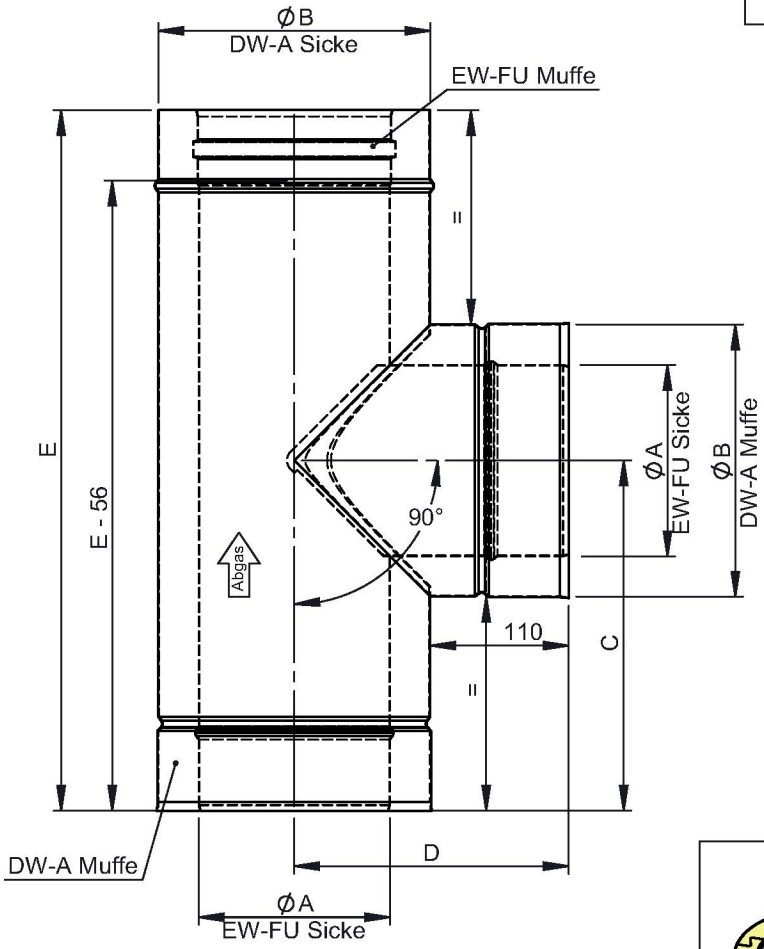

M 1:10 (Ø150)

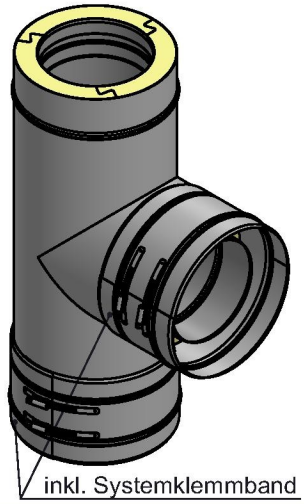

Ø							130		150	160	180										
A							130		150	160	180										
B							195		215	225	245										
C	278																				
D							208		218	223	233										
E	556																				
kg							5,7		6,3	6,6	7,2										

notes:

DIN ISO 13920 Tolerances B

revisions-no. A1 | mm / kg

	date	name
drawn by	12.04.2022	KSA
checked by		
approved by		
modified by		

jeremias® CHIMNEY SYSTEMS

description: T-Anschluss 90° mit Wassernase, inkl. Klemmband

code: **DW317**

drawing-no.: **01-02-20-2200-000**

scale: 1:6

format: A4

sheet: 1 of 1

© jeremias GmbH. All rights reserved, also regarding any disposal, exploitation, editing, distribution, as well as in the event of applications for industrial property rights.