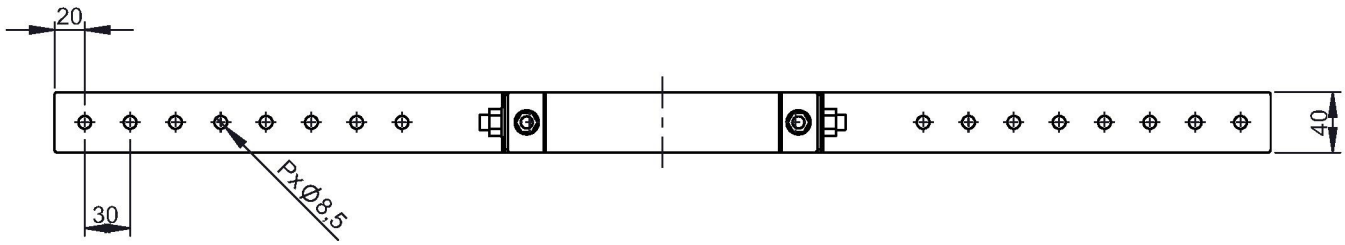

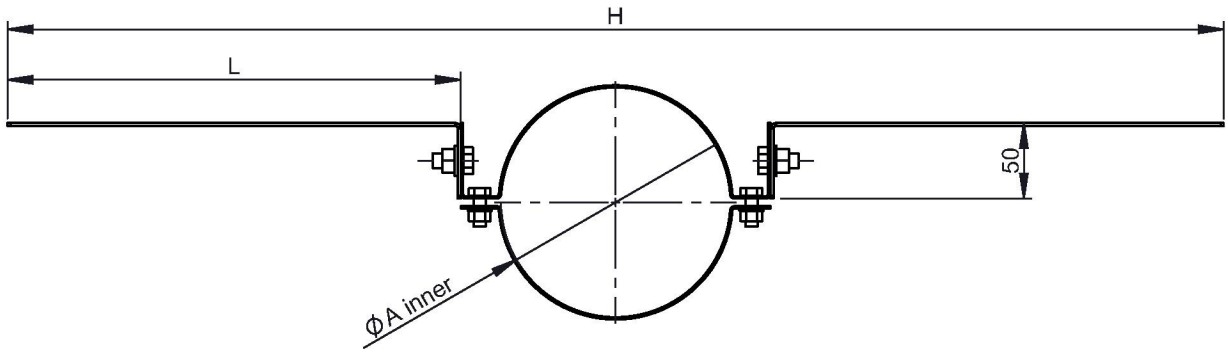

1:8 (150)

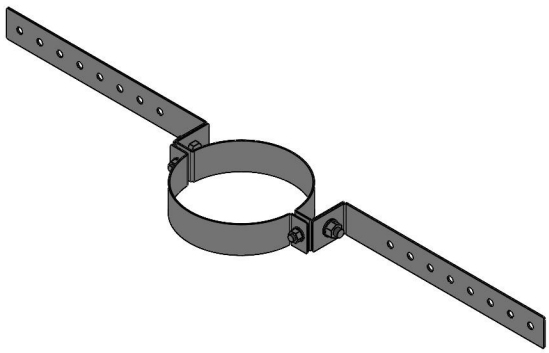

Ø																		**195**		
A																		196		
L	300																			
H																		846		
P	8																			
kg																		0,91		

Ø		**215**		**225**				**245**							
A		216		226				246							
L	300														
H		866		876				896							
P	8														
kg		0,94		0,95				0,98							

Ø
A
L
H
P
kg

notes:
ENCD

DIN ISO 13920 Tolerances B

revisions-no. 01 | mm / kg

	date	name
drawn by	17.02.20	JMA
checked by	17.02.20	SWA
approved by	17.02.20	JWY
modified by	02.11.23	HSA

jeremias® CHIMNEY SYSTEMS

description: Rafter brace, non-static light version

code: **2R2-ZUAC55L**

drawing-no.: **01-07-04-0401-000**

scale: 1:10

format: A4

sheet: 1 of 1

© jeremias GmbH. All rights reserved, also regarding any disposal, exploitation, editing, distribution, as well as in the event of applications for industrial property rights.