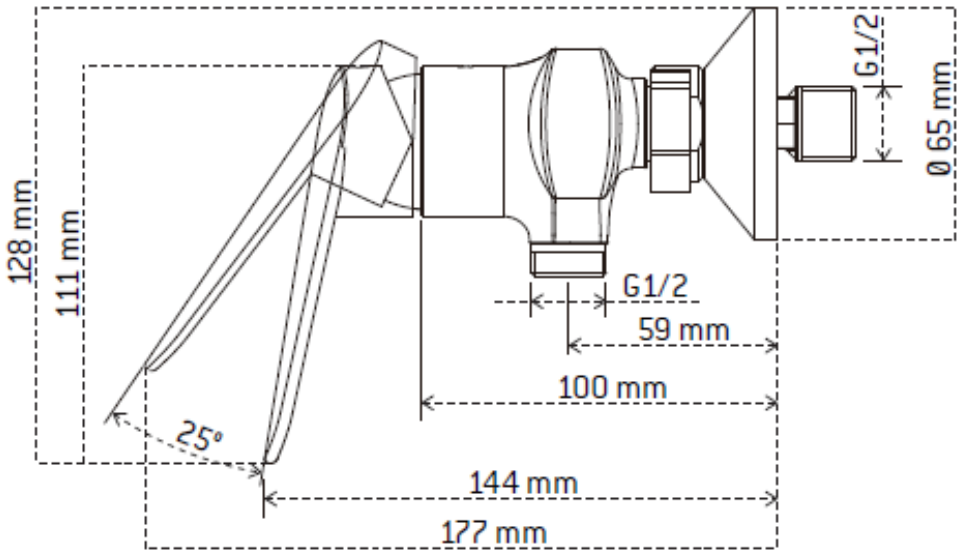
128 mm
111 mm
G1/2
Ø 65 mm
G1/2
59 mm
100 mm
25°
144 mm
177 mm

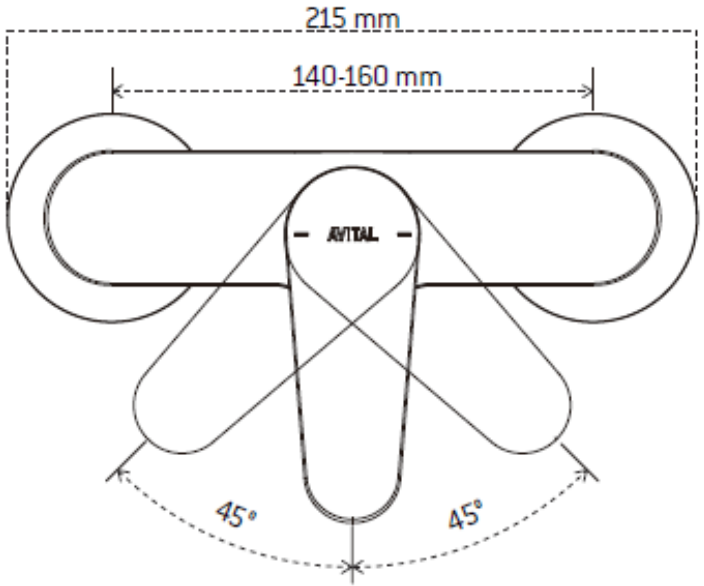
215 mm
140-160 mm
AVITAL
45°
45°