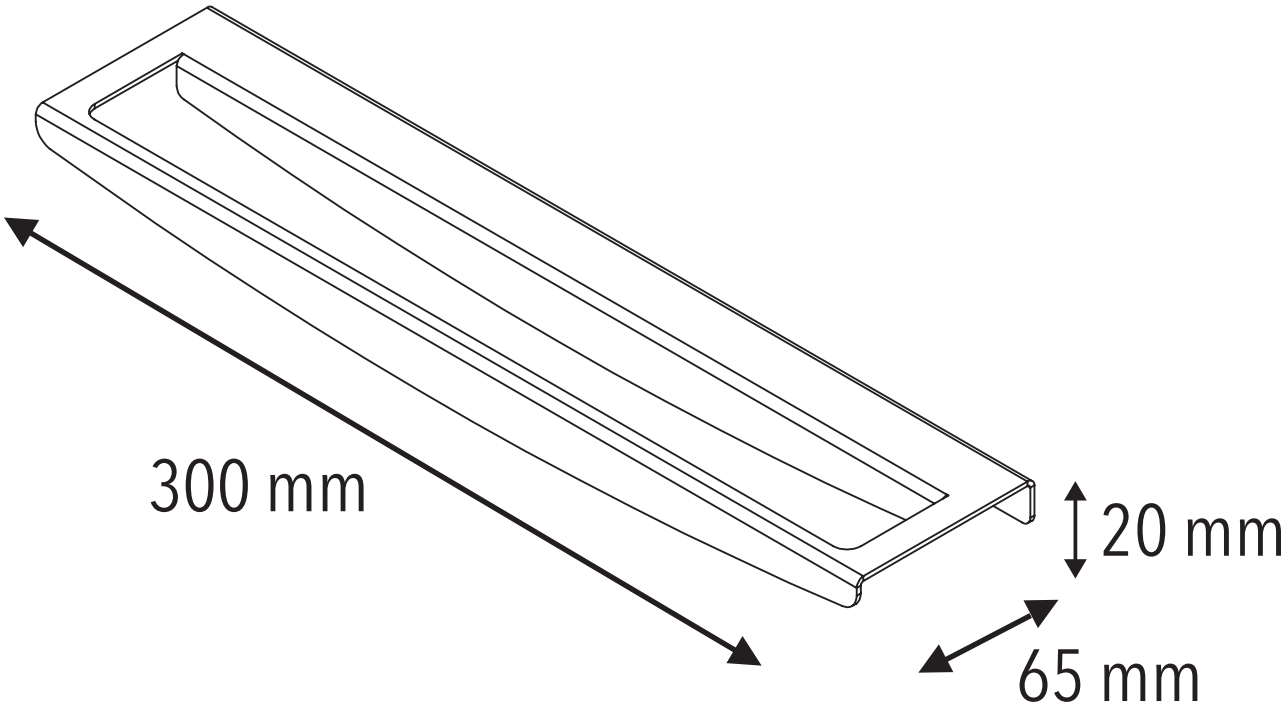

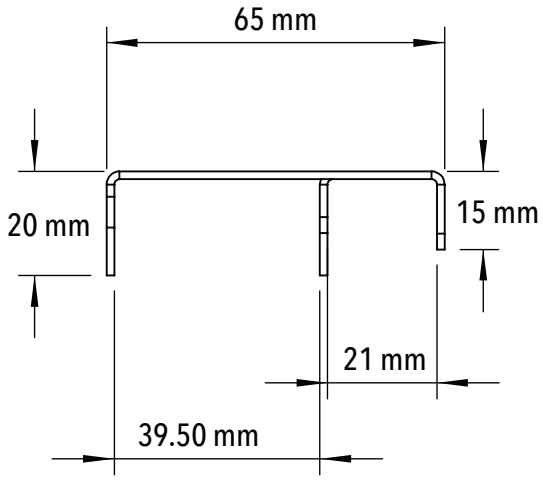

Avior
Art. 12678625