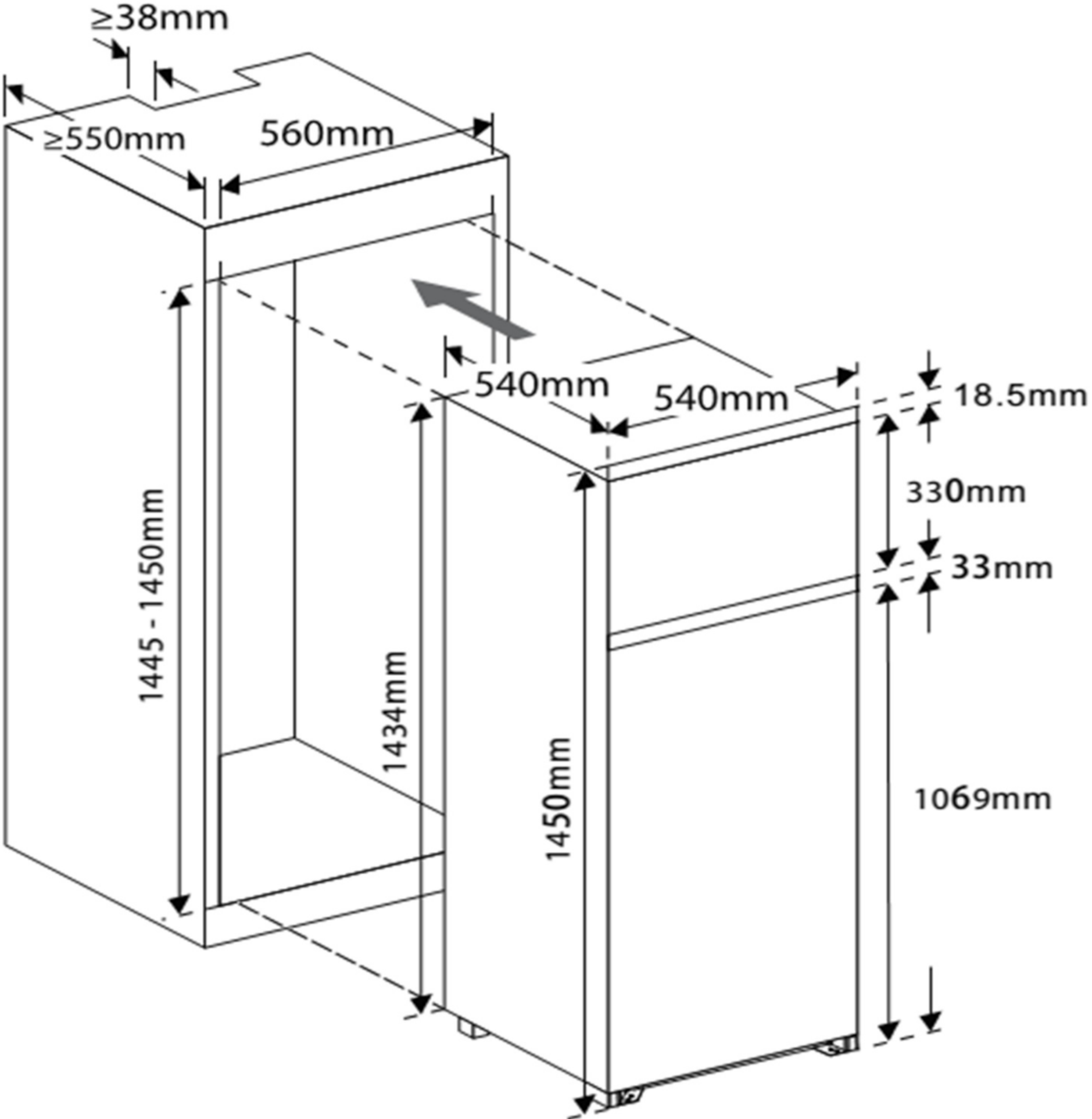
≥38mm
≥550mm
560mm
540mm
540mm
18.5mm
330mm
33mm
1445 - 1450mm
1434mm
1450mm
1069mm