Part 2a

# Assembly

# Bridge Module

850_240

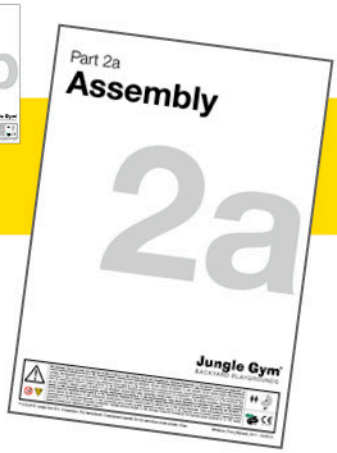


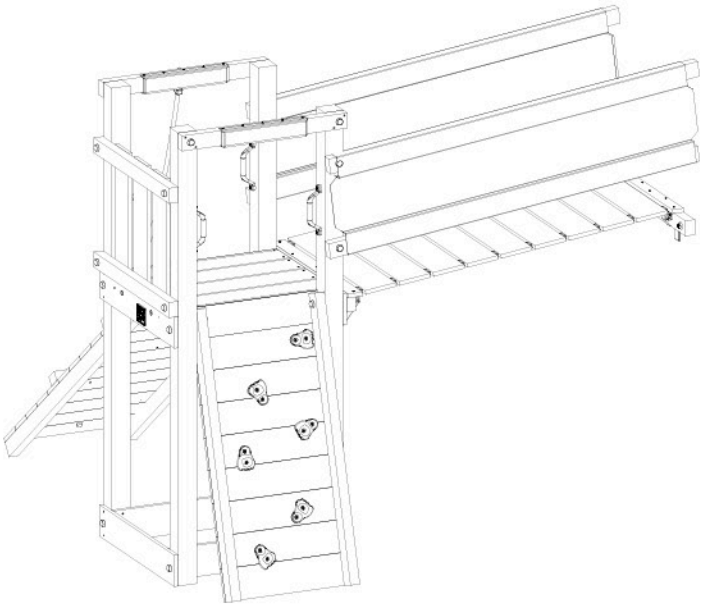


| | | | |
|---|---|---|---|
| 801_005 **Jungle Palace** | 2 | 801_090 **Jungle Cottage** | 15 |
| 801_007 **Jungle Barn** | 3 | 801_095 **Jungle House** | 16 |
| 801_008 **Jungle Farm** | 4 | 801_100 **Jungle Hut** | 17 |
| 801_009 **Jungle Mansion** | 5 | 801_103 **Jungle Home** | 18 |
| 801_010 **Jungle Fort** | 6 | 801_105 **Jungle Casa** | 19 |
| 801_013 **Jungle Chalet** | 7 | 801_110 **Jungle Club** | 20 |
| 801_020 **Jungle Villa** | 9 | 801_120 **Jungle Castle** | 21 |
| 801_040 **Jungle Lodge** | 10 | 801_200 **Jungle Tower** | 22 |
| 801_060 **Jungle Cabin** | 11 | 835_251 **Crazy Playhouse CXL** | 23 |
| 801_065 **Jungle Shelter** | 12 | 835_253 **Jungle Playhouse XL** | 24 |
| 801_070 **Jungle Cubby** | 13 | | |


Jungle Gym®
BACKYARD PLAYGROUNDS

0-3 3-10

**EN.** Warnings. Only for domestic use. Maximum number of users is 5. **DE.** Achtung. Nur für den Hausgebrauch. Maximale Benutzerzahl: 5. **FR.** Attention. Réservé à un usage privé. Le nombre maximal d'utilisateurs est de 5. **NL.** Waarschuwingen. Uitsluitend voor huishoudelijk gebruik. Het maximale aantal gebruikers is 5. **BG.** Внимание. За употреба само в домашни условия. Максималният брой потребители е 5. **CS.** Varování. Jen pro domácí použití. Maximální počet uživatelů je 5. **DA.** Advarsler. Kun til privat brug. Maksimum antal brugere er 5. **EL.** Προειδοποιήσεις. Μόνο για οικιακή χρήση. Μέγιστος αριθμός χρηστών 5. **ES.** Advertencias. Sólo para uso doméstico. Número máximo de usuarios: 5. **ET.** Hoiatused. Ainult koduseks kasutamiseks. Maksimaalne kasutajate arv on 5. **FI.** Varoitukset. Ainoastaan kotikäyttöön. Käyttäjiä yhteensä enintään 5. **HR.** Upozorenja. Samo za kućansku uporabu. Maksimalan broj korisnika je 5. **HU.** Figyelmeztetések. Csak otthoni használatra! A használók max. száma: 5. **IS.** Varnaðarorð. Eingöngu fyrir einkanotkun í heimahúsum og á einkalóðum. Hámarksfjöldi notenda er 5. **IT.** Avvertenze. Solo per uso domestico. Massimo numero di utenti è 5. **LT.** Įspėjimai. Tik buitiniam naudojimui. Maksimalus naudotojų skaičius 5. **LV.** Brīdinājumi. Izmantot tikai mājās. Maksimālais lietotāju skaits ir 5. **NO.** Advarsler. Kun for privat bruk. Maksimalt antall brukere er 5. **PL.** Ostrzeżenia. Wyłącznie do użytku domowego. Maksymalna liczba użytkowników to 5. **PT.** Avisos. Apenas para uso doméstico. O número máximo de utilizadores é 5. **RO.** Avertismente. Numai pentru uz domestic. Numărul maxim de utilizatori este 5. **RU.** Предостережения. Только для домашнего использования. Максимальное количество пользователей - 5. **SK.** Upozornenia. Iba na domáce použitie. Maximálne množstvo osôb je 5. **SL.** Opozorila. Samo za domačo uporabo. Maksimalno število uporabnikov je 5. **SR.** Upozorenja. Samo za kućnu upotrebu. Maksimalan broj korisnika je 5. **SV.** Varningar. Endast för hemmabruk. Det maximala antalet användare är 5. **TR.** Uyarılar. Sadece ev kullanımı için. Maksimum kullanıcı sayısı 5.

3h

™ & © 2018 Jungle Gym B.V. Amsterdam, The Netherlands. Copyrighted material. Do not reproduce under penalty of law.

# Jungle Palace

## 1

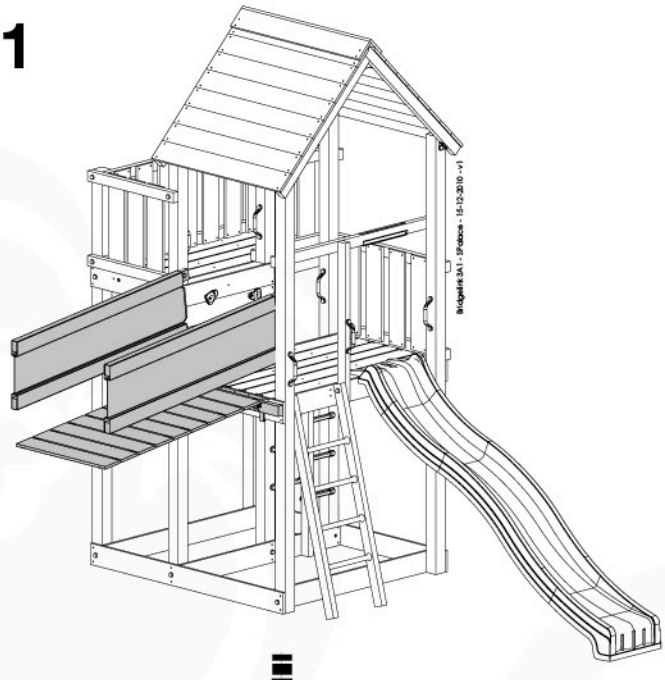

## 1’

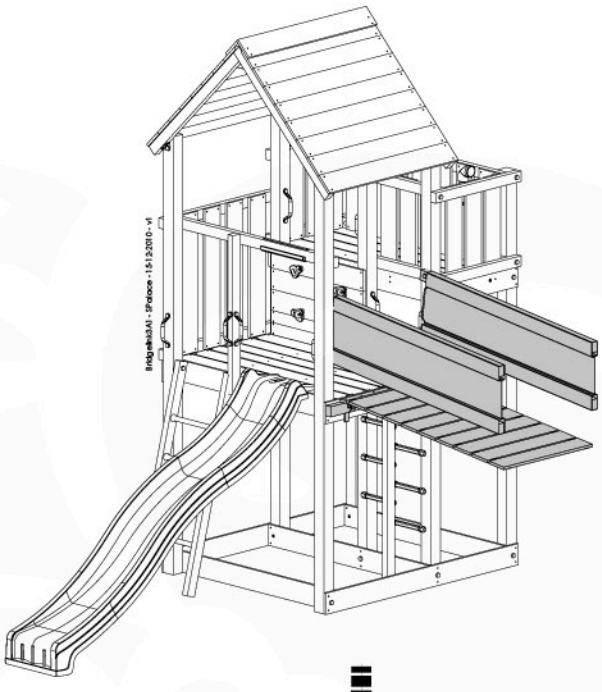

## 1a

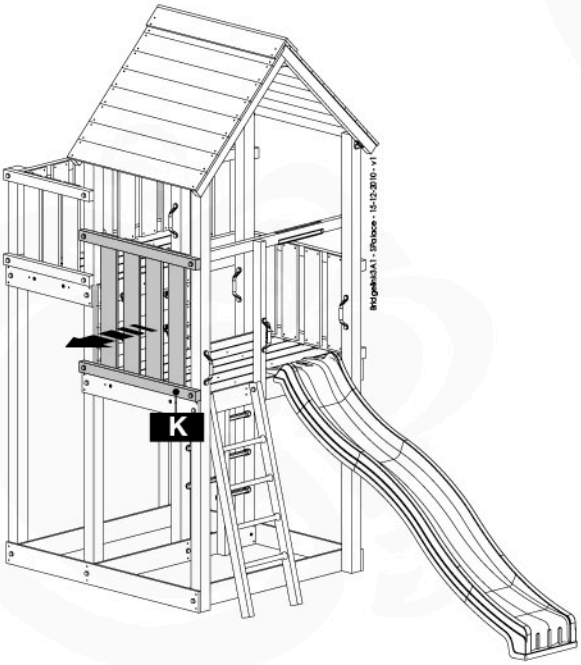


## 1a’

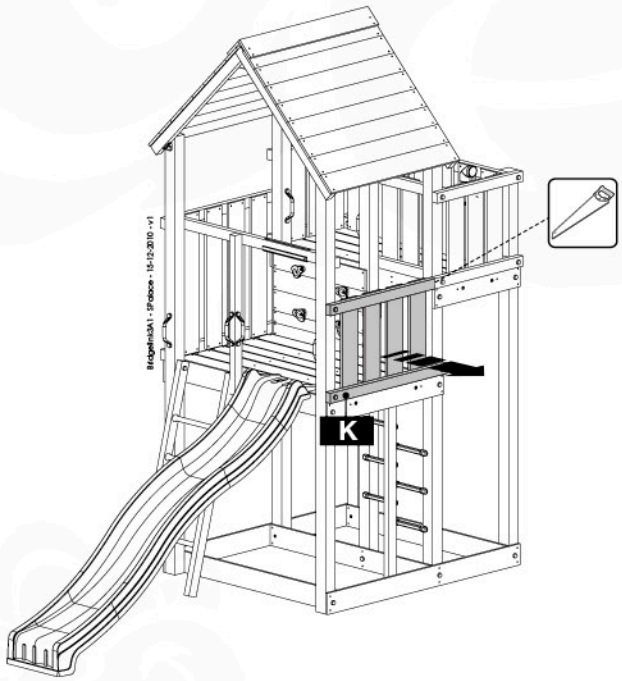


## 1b

## 1b’

www.junglegym.com - © 2018 Jungle Gym B.V.

# Jungle Barn 1

**1**

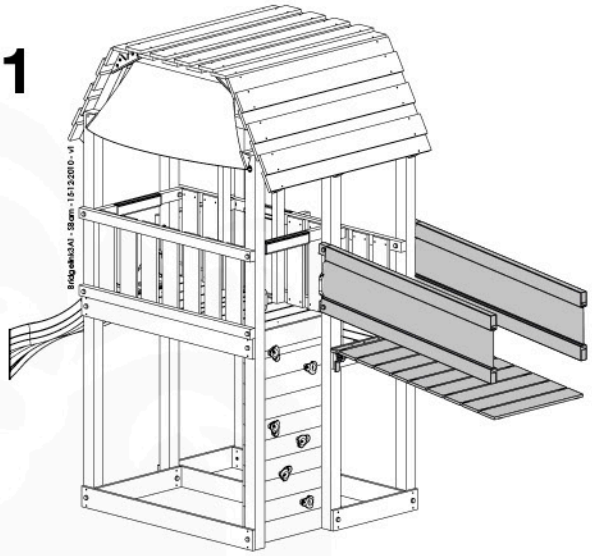

**1a**

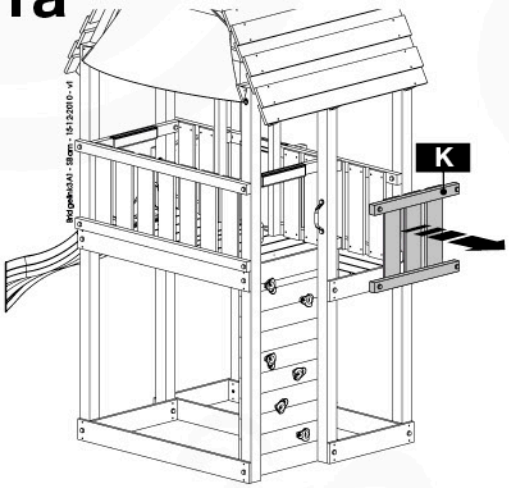


**1b**

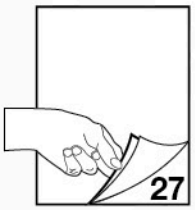


# Jungle Barn 2

**1**

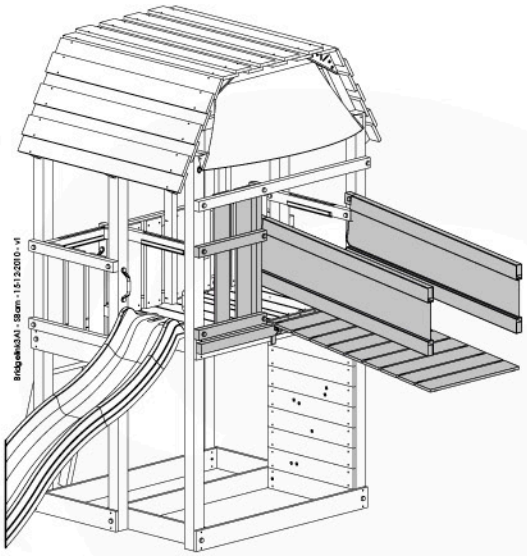

**1a**

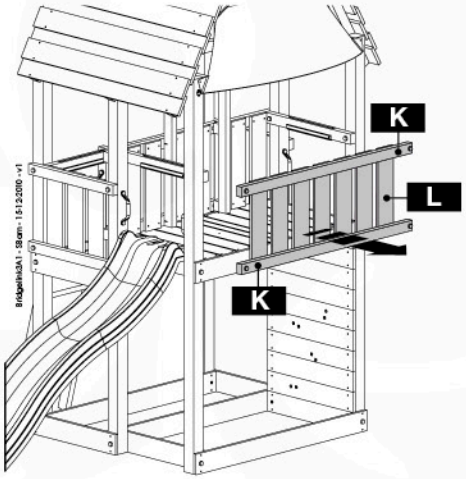


**1b**

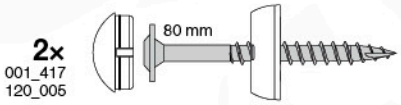


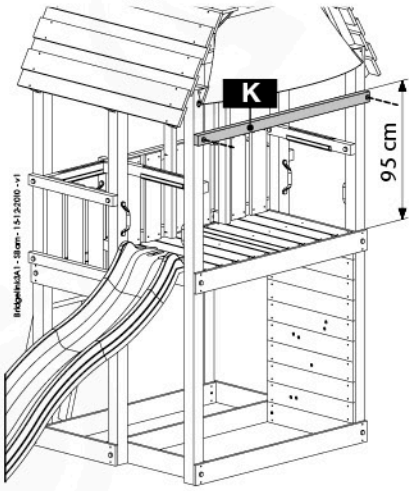


**1c**

© 2018 Jungle Gym B.V. - www.junglegym.com

# Jungle Farm 1

**1**

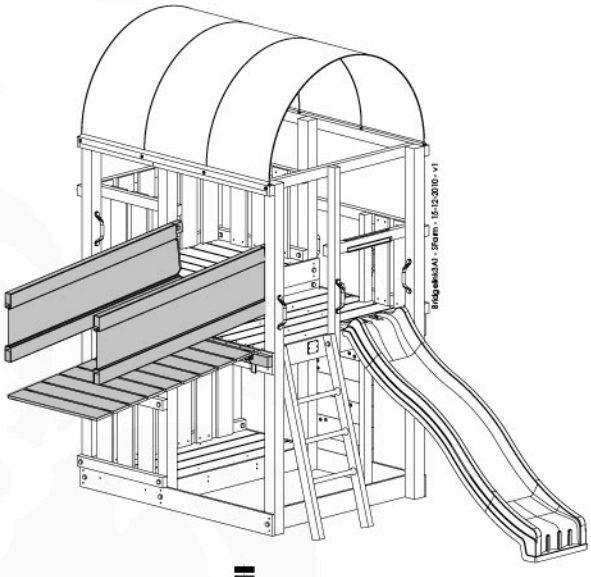

**1a**

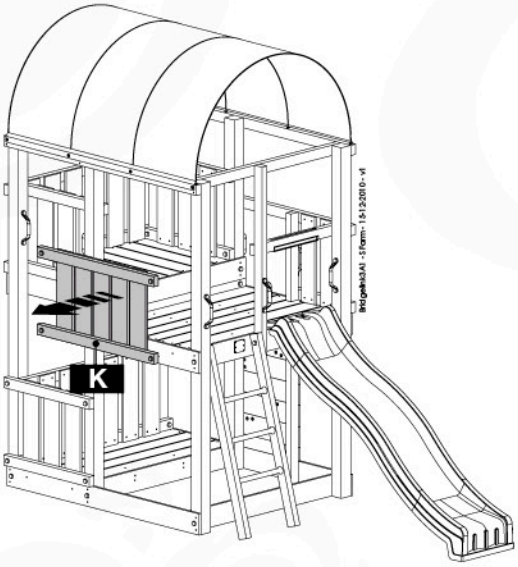


**1b**

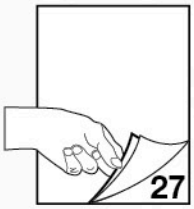


# Jungle Farm 2

**1**

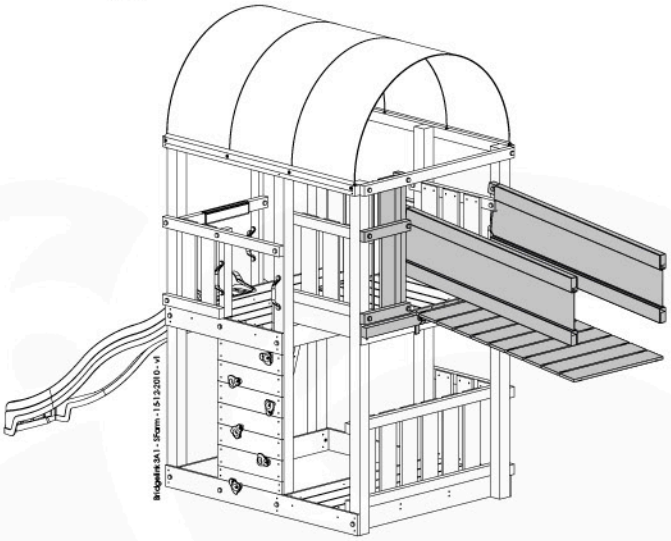

**1a**

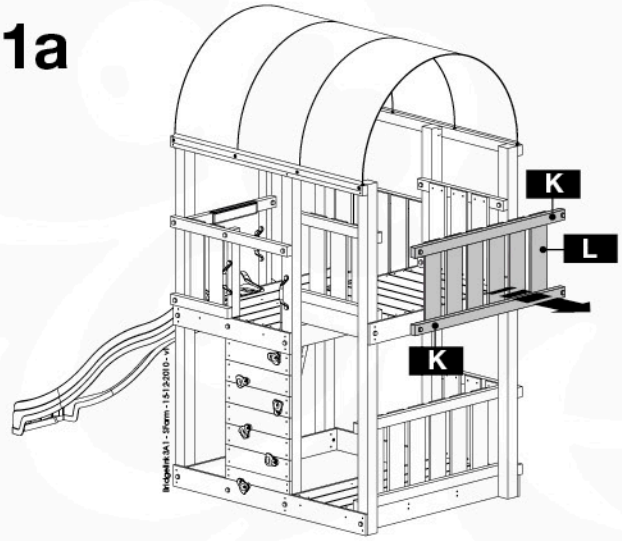


**1b** 2x 001_417 120_005

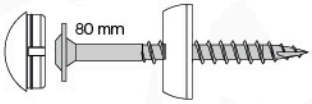


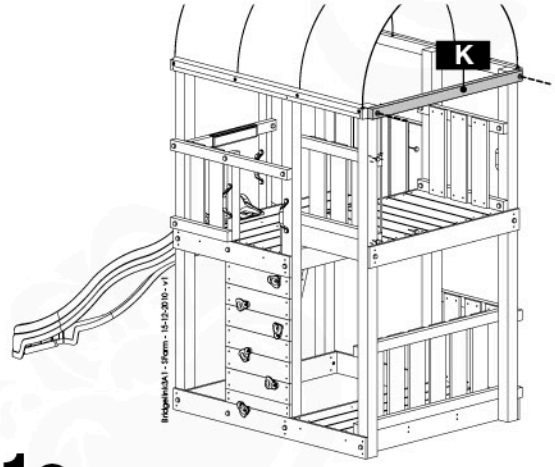


**1c**

www.junglegym.com - © 2018 Jungle Gym B.V.

# Jungle Mansion

## 1

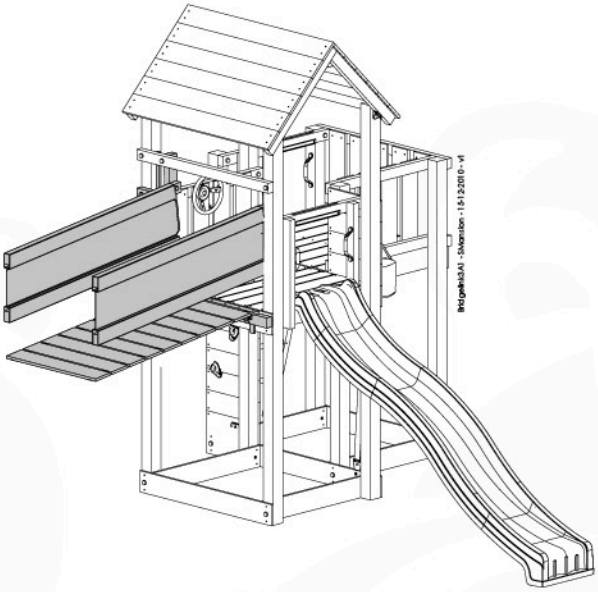

## 1a

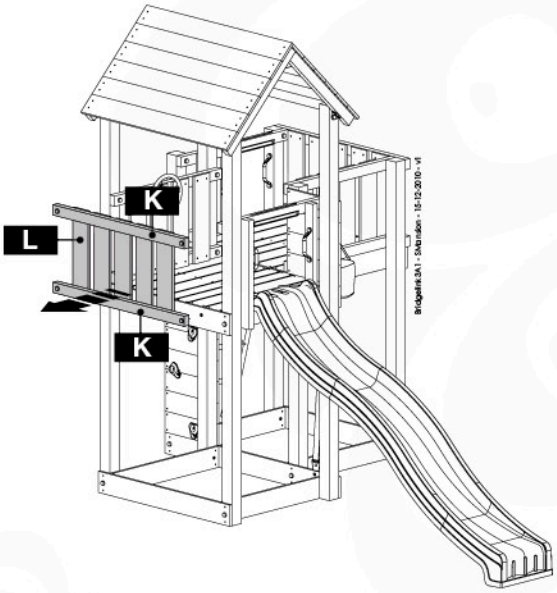


## 1b

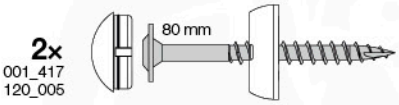


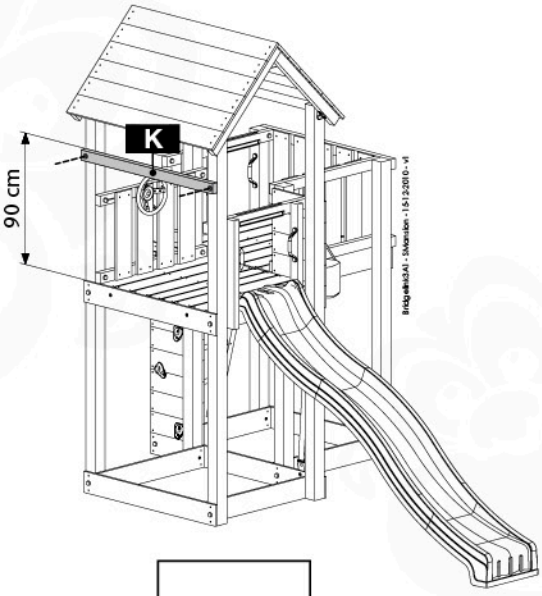


## 1c

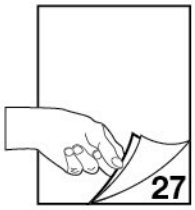

# Jungle Fort

## 1

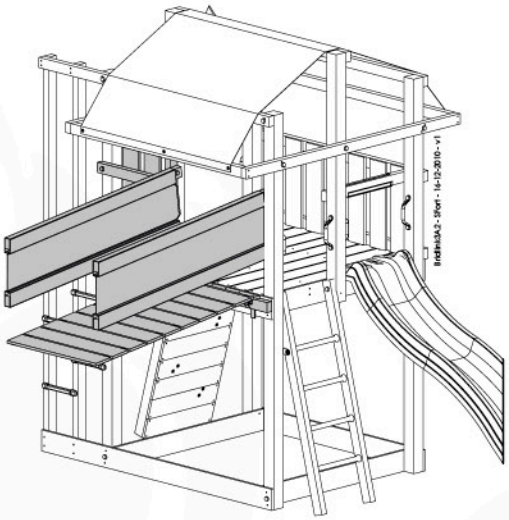

## 1’

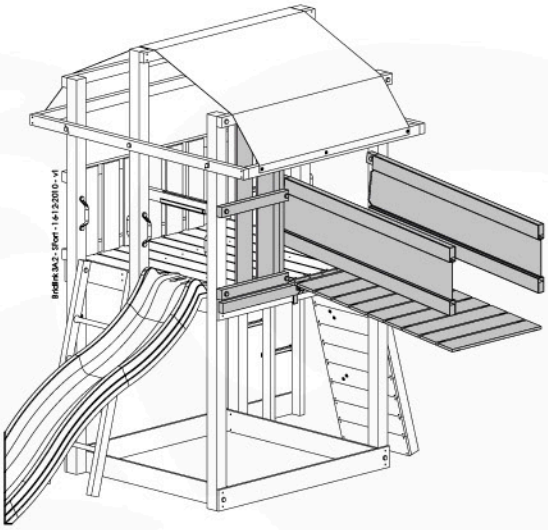

## 1a

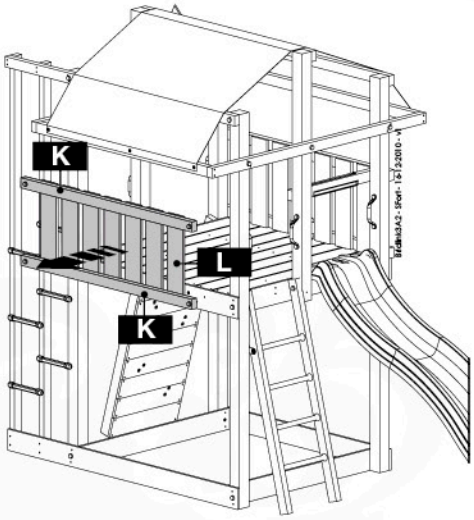


## 1a’

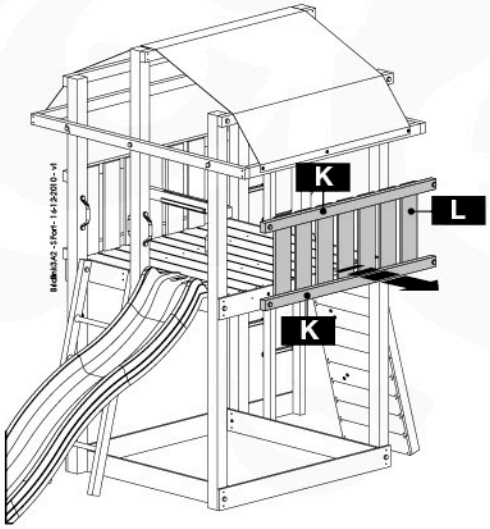


## 1b

## 1b’

# Jungle Chalet

**1**

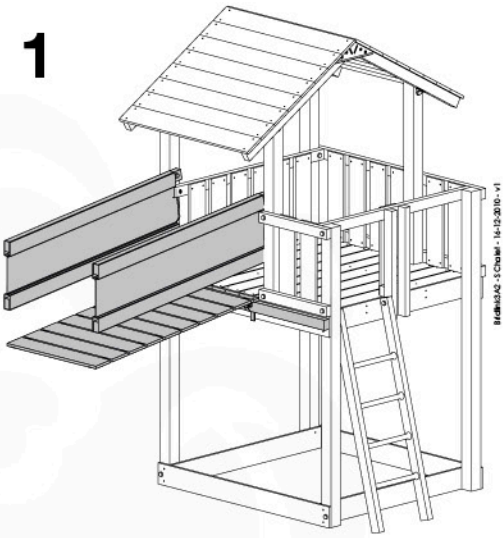

**1’**

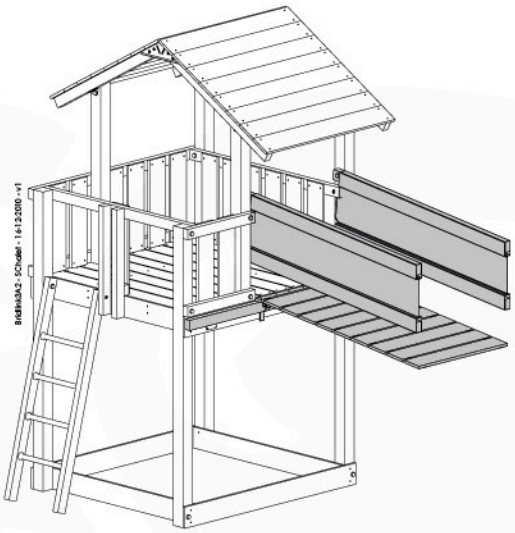

**1a**

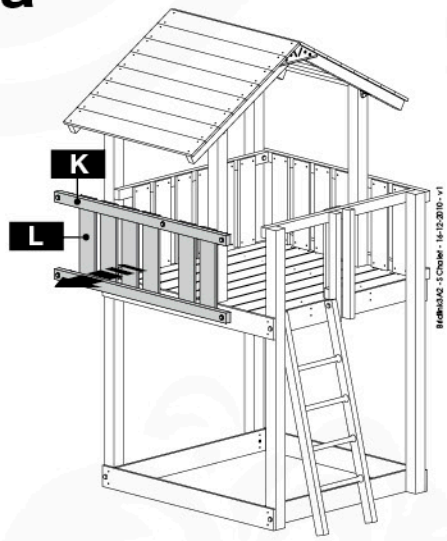


**1a’**

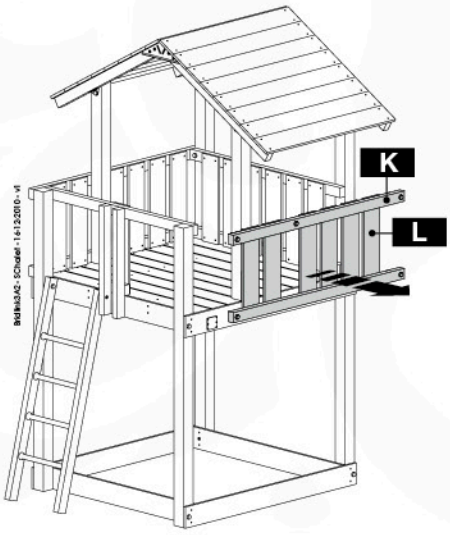


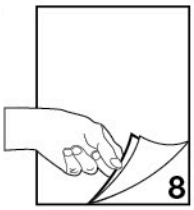

# Jungle Chalet

## 1b

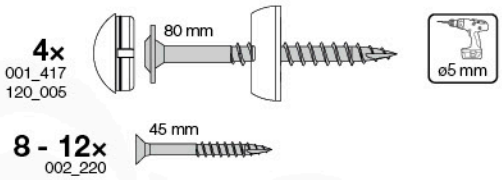


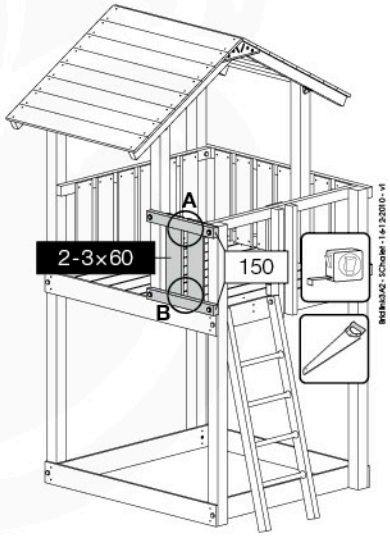


## 1b'

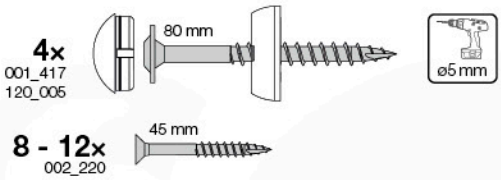


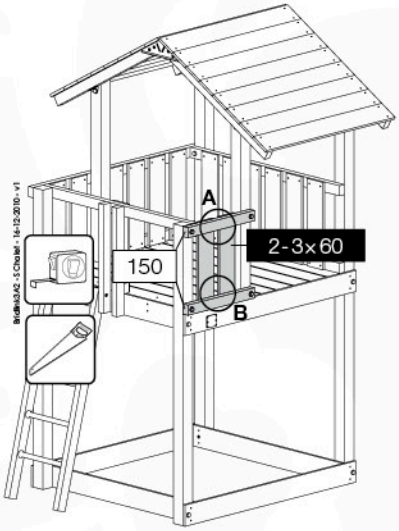


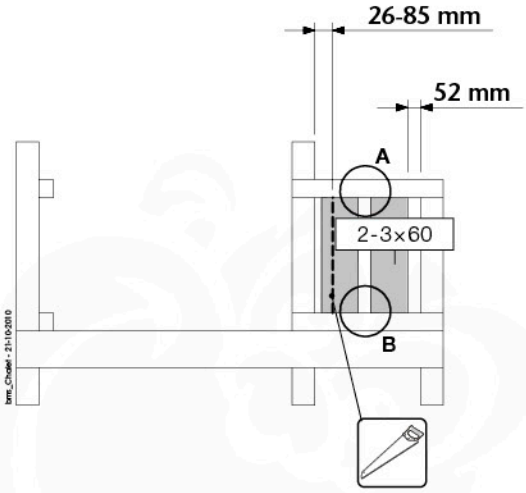


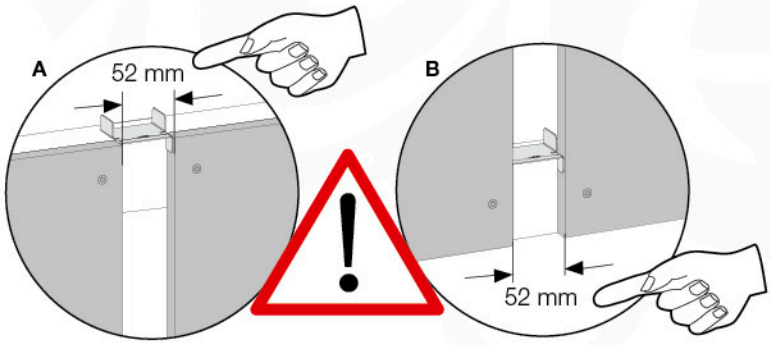


## 1c

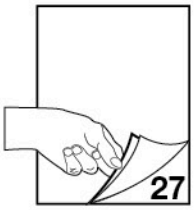


## 1c'

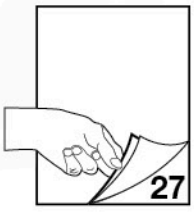

# Jungle Villa

## 1

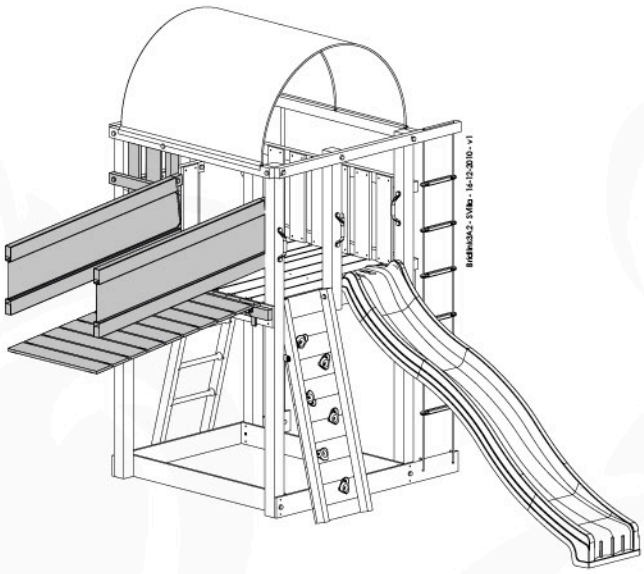

## 1a

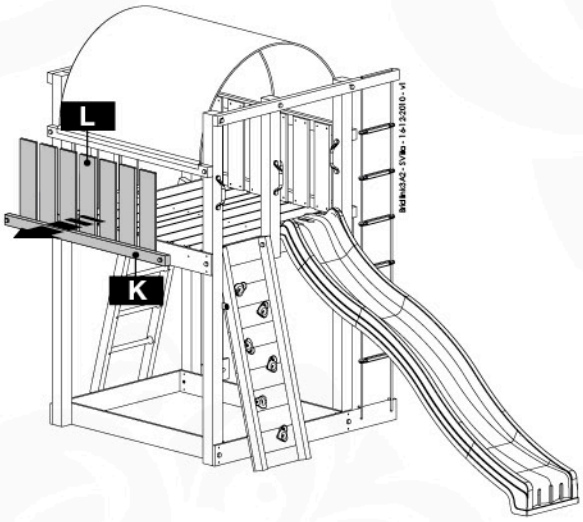


## 1b

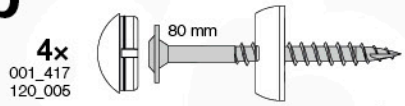

## 1c

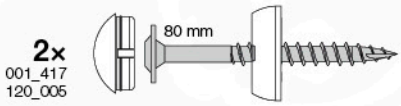


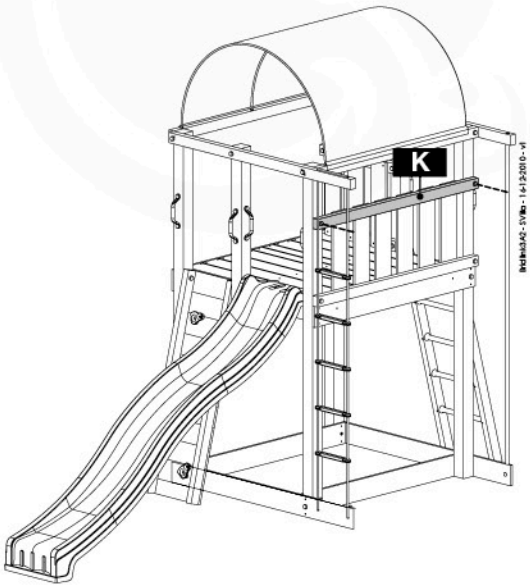


## 1d

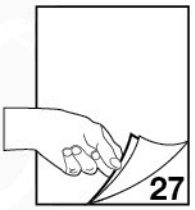

# Jungle Lodge

## 1

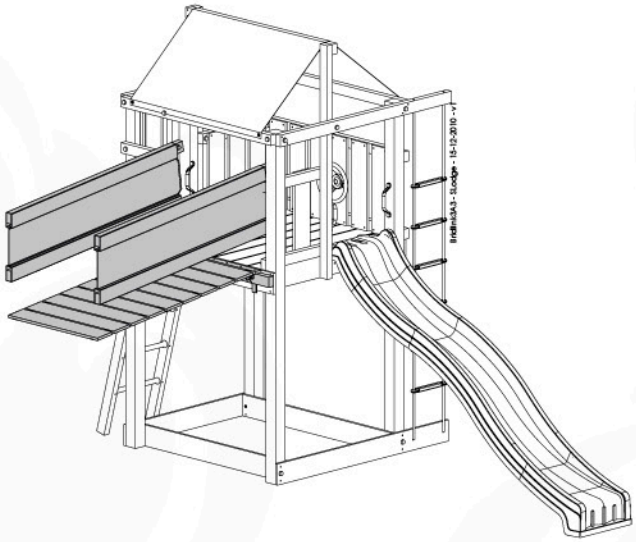

## 1a

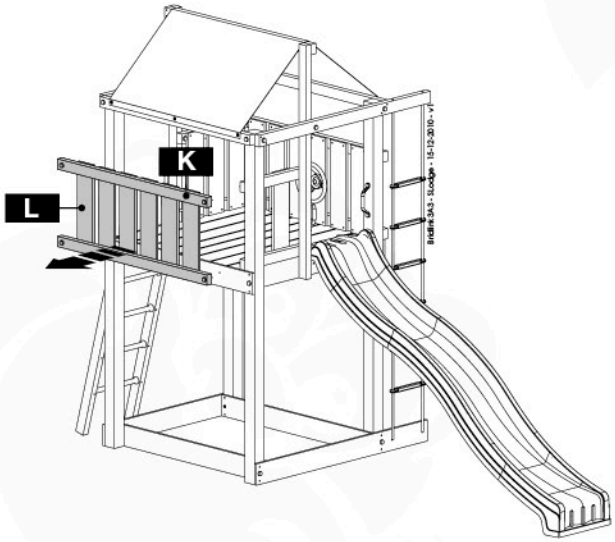


## 1b

# Jungle Cabin

## 1

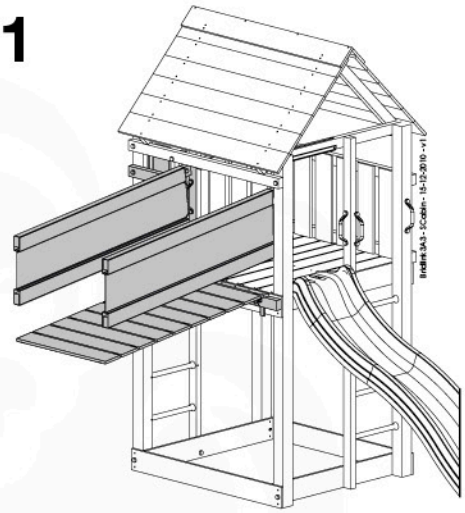

## 1'

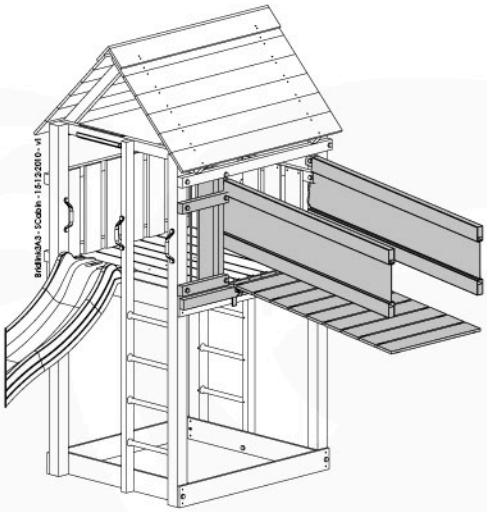

## 1a

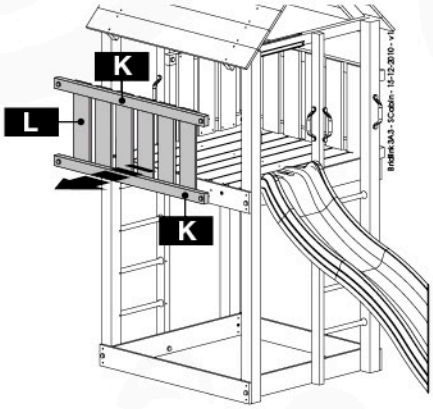


## 1a'

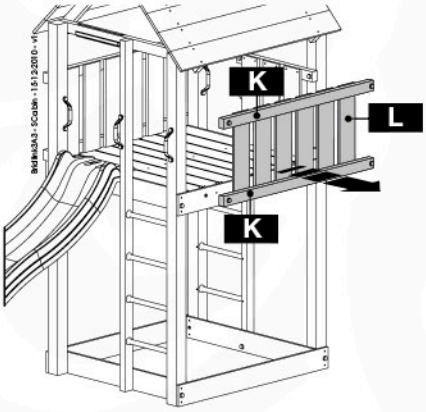


## 1b

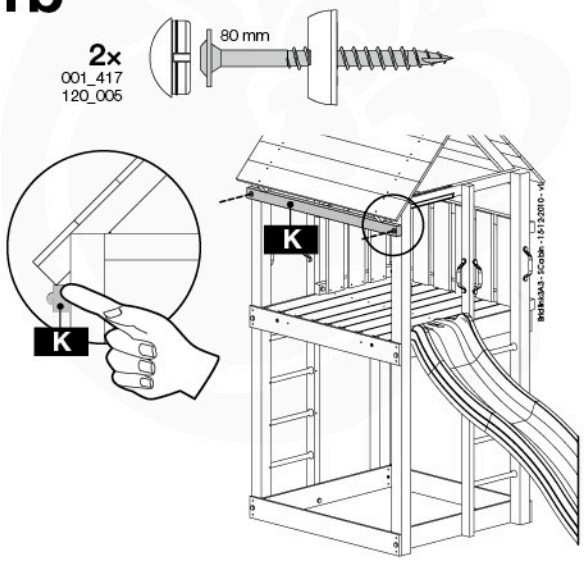


## 1b'

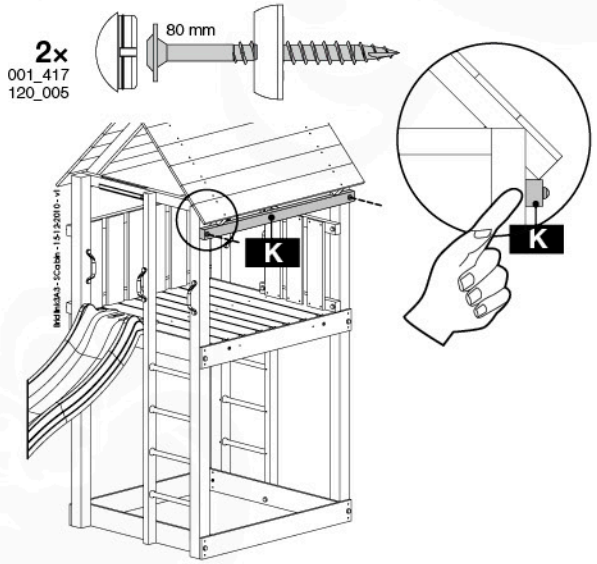


## 1c

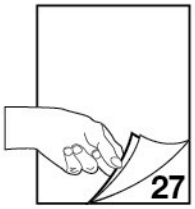


## 1c'

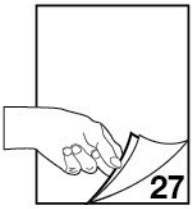


© 2018 Jungle Gym B.V. - www.junglegym.com

# Jungle Shelter

## 1

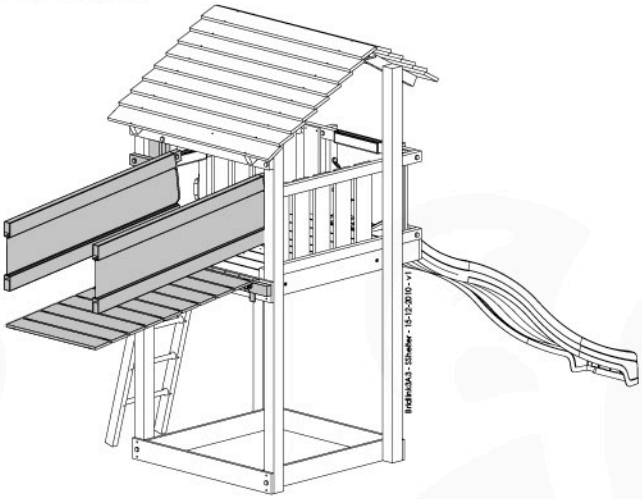

## 1a

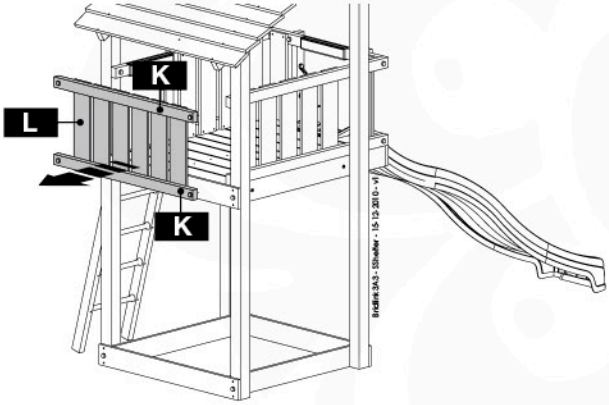


## 1b

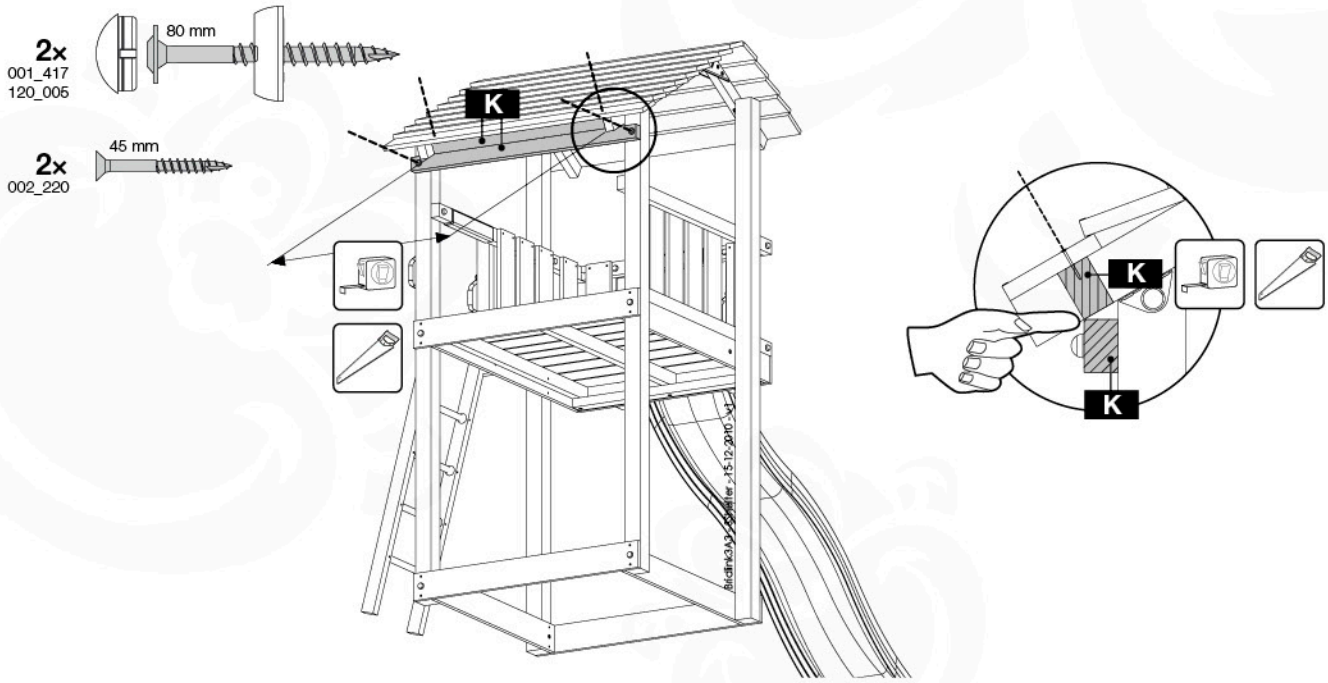


## 1c

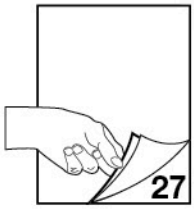

# Jungle Cubby

## 1

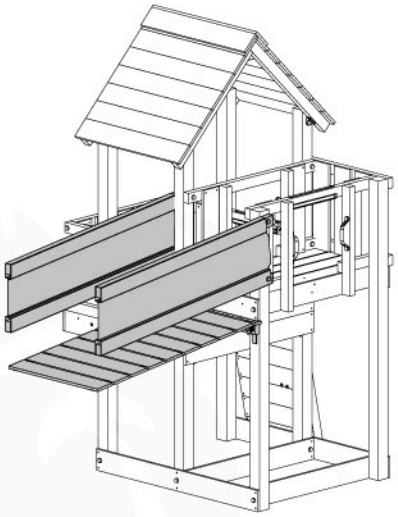

## 1’

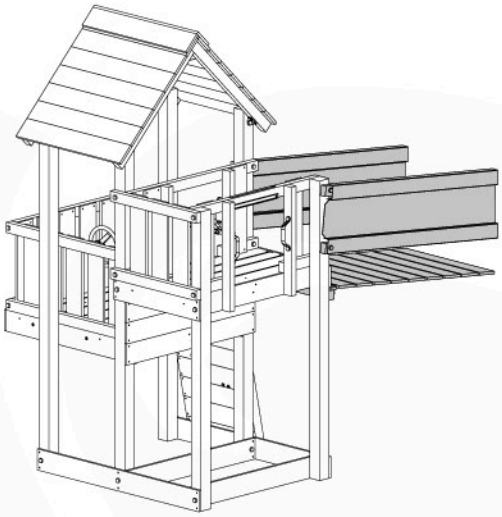

## 1a

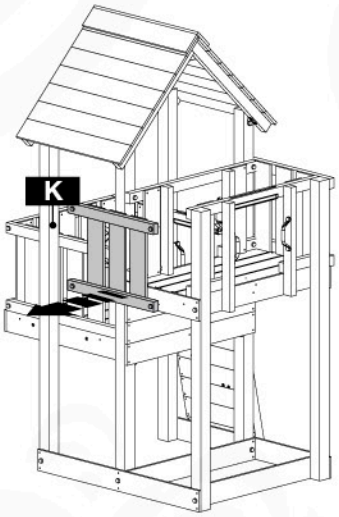


## 1a’

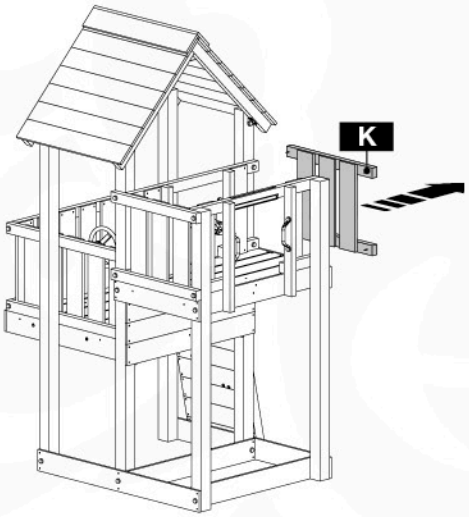


## 1b

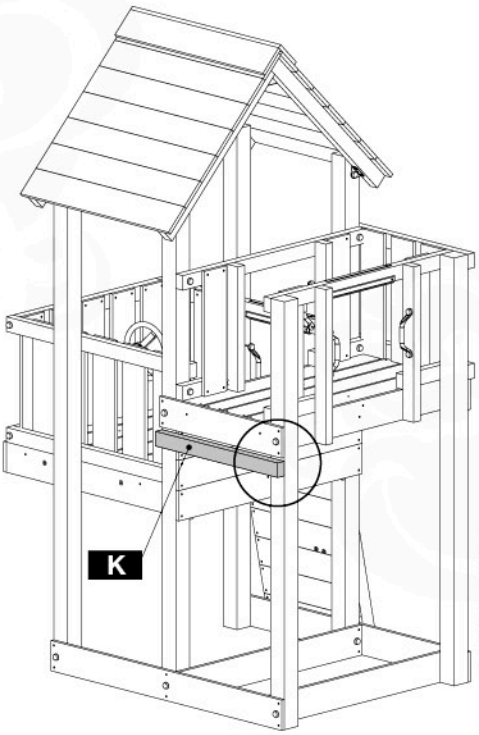


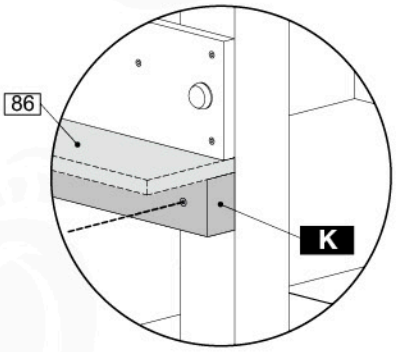


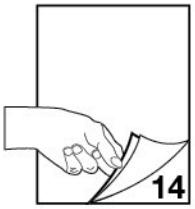

# Jungle Cubby

## 1c

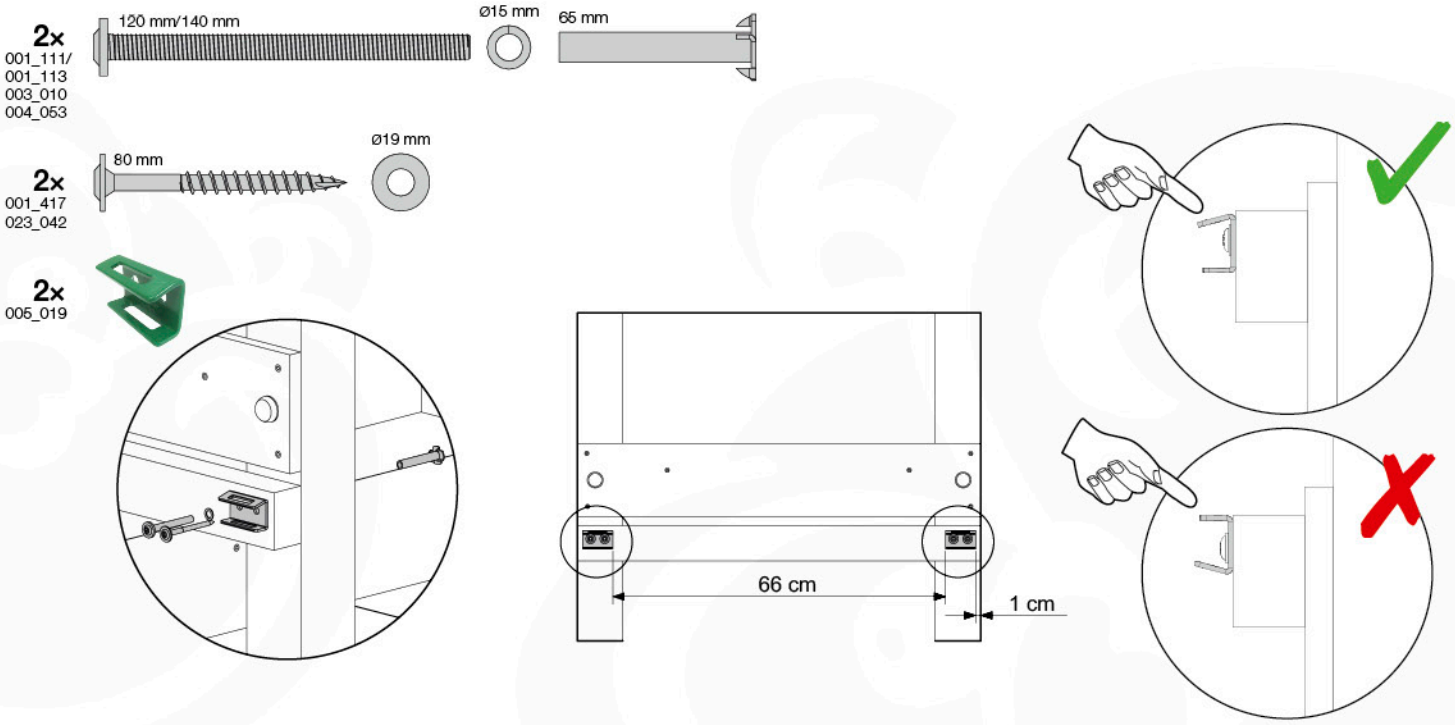


## 1d

www.junglegym.com - © 2018 Jungle Gym B.V.

# Jungle Cottage

## 1

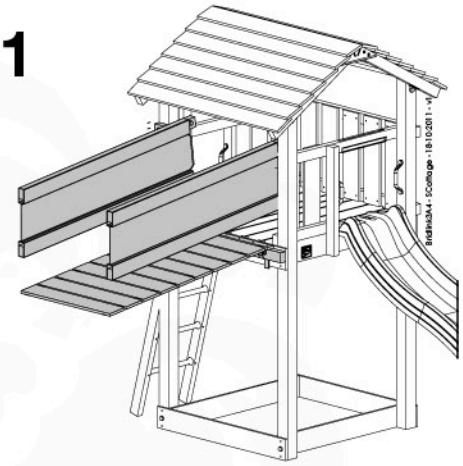

## 1'

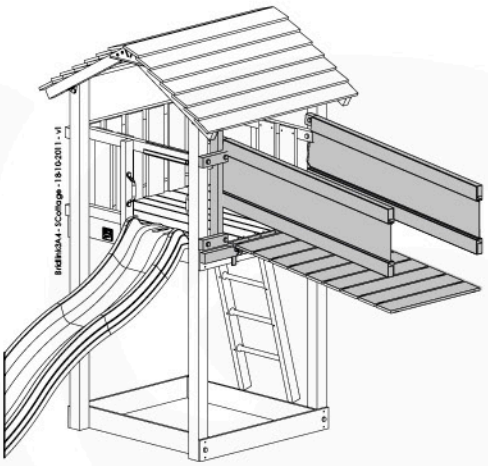

## 1a

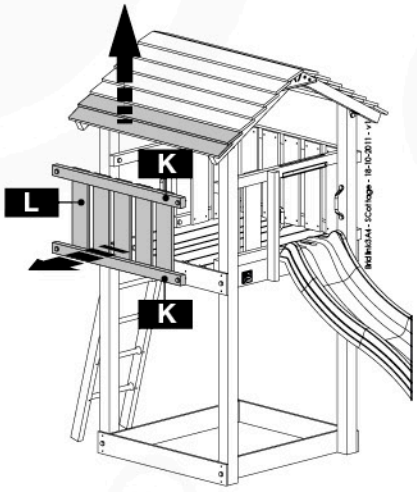


## 1a'

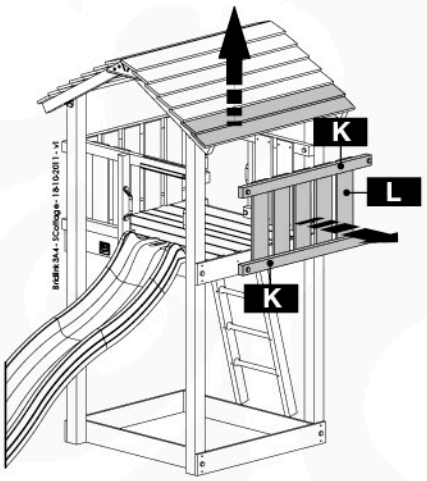


## 1b

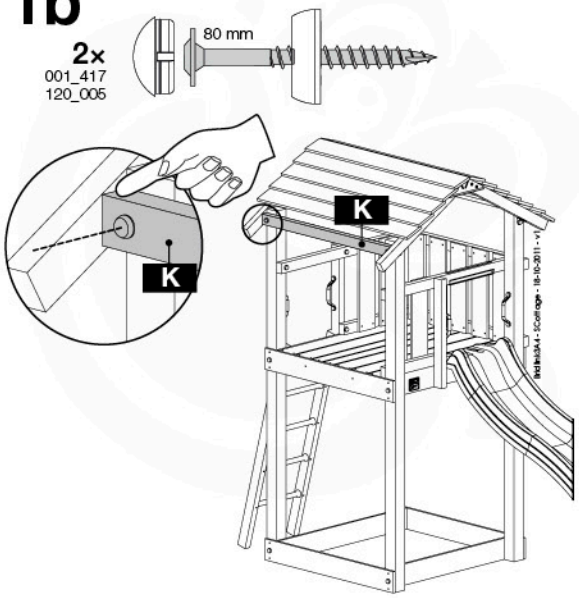


## 1b'

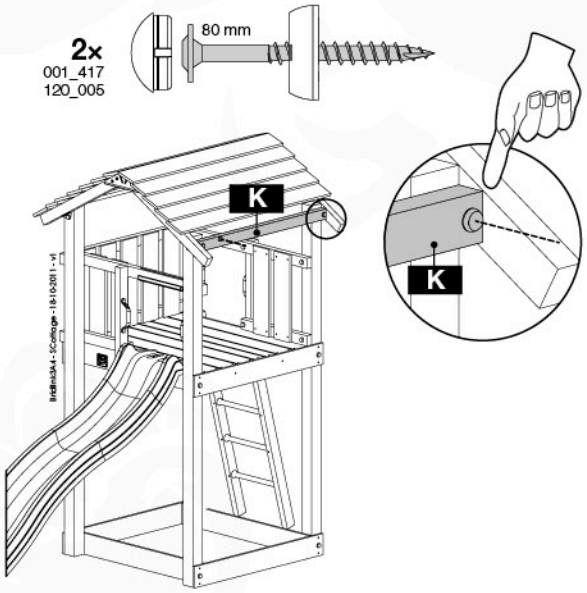


## 1c

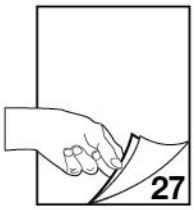


## 1c'

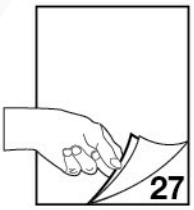


© 2018 Jungle Gym B.V. - www.junglegym.com

# Jungle House

## 1

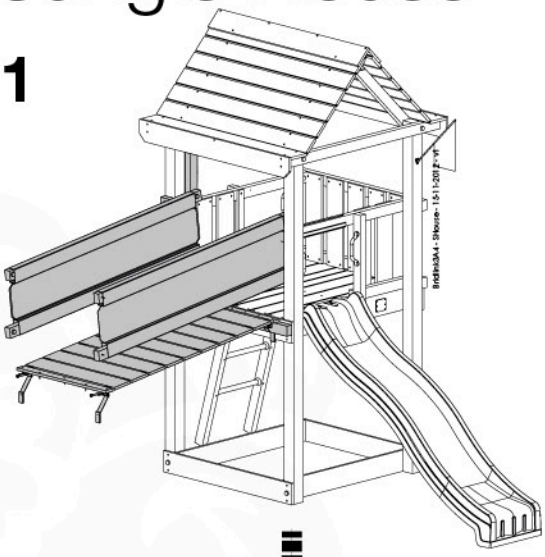

## 1'

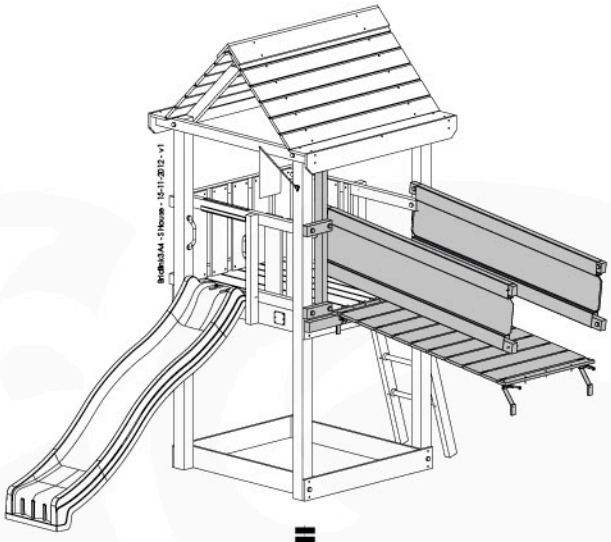

## 1a

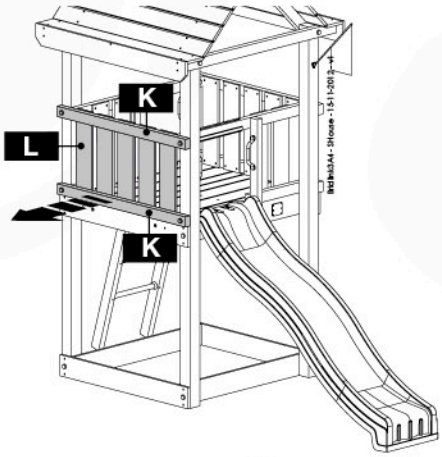


## 1a'

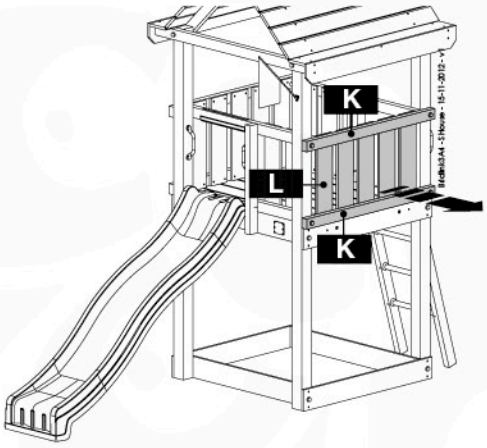


## 1b

2x
001_417
120_005

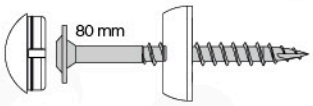


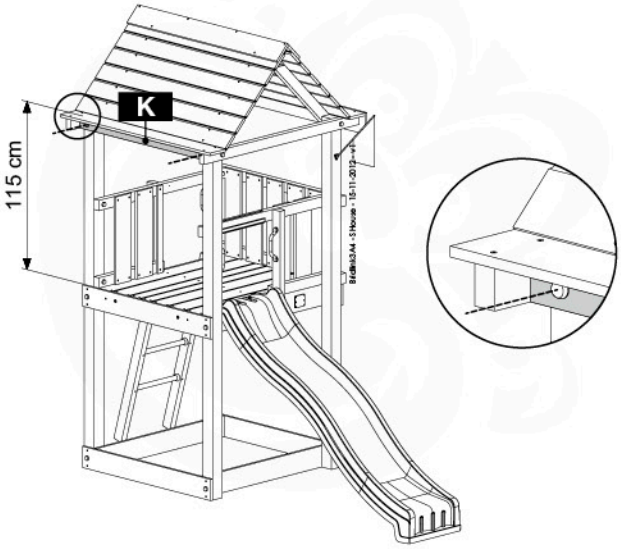


## 1b'

2x
001_417
120_005

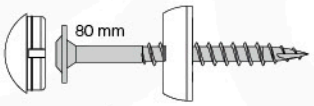


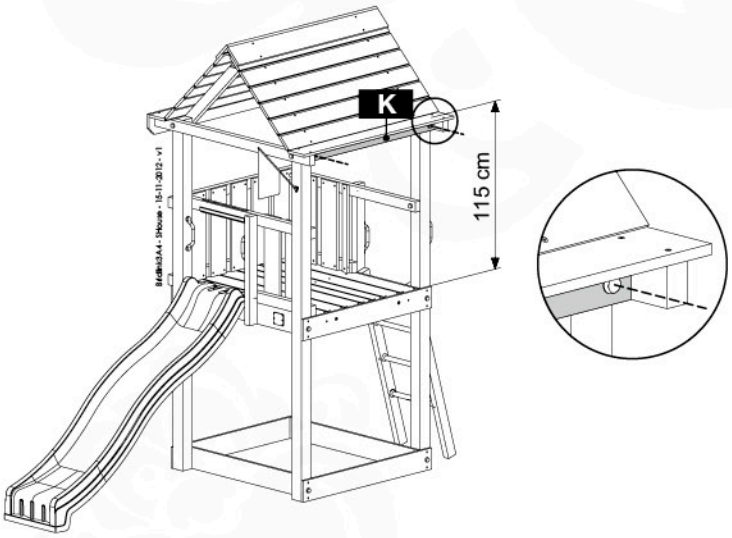


## 1c

## 1c'

# Jungle Hut

## 1

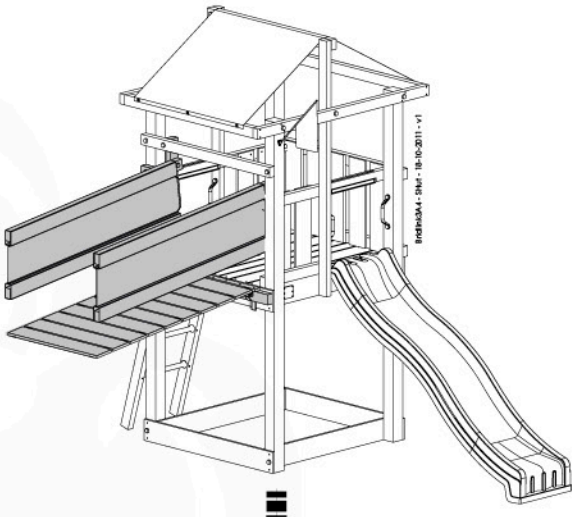

## 1'

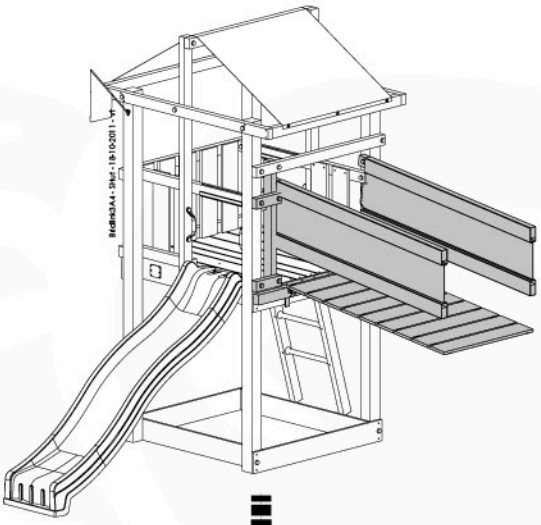

## 1a

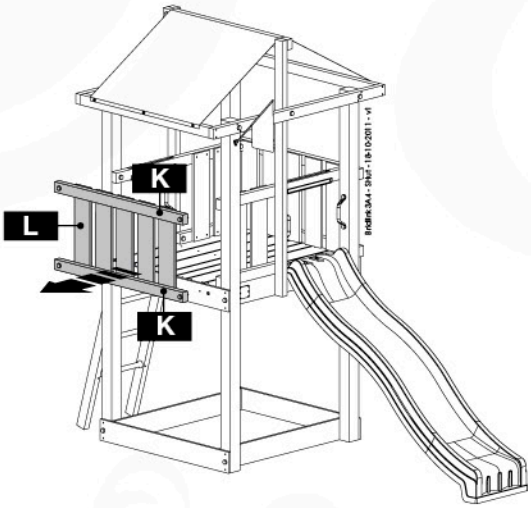


## 1a'

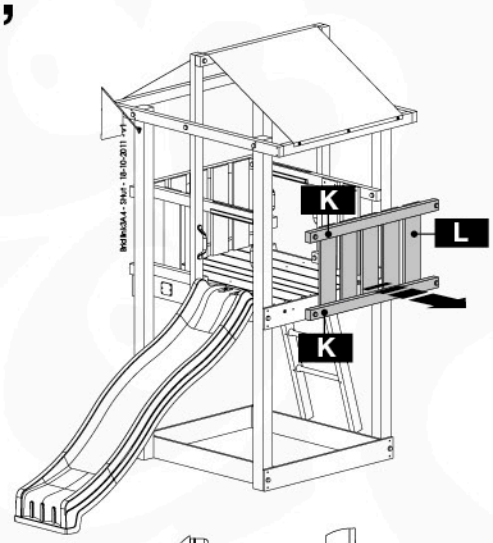


## 1b

2x
001_417
120_005

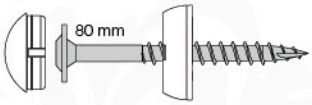


## 1b'

2x
001_417
120_005

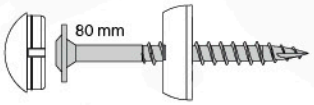


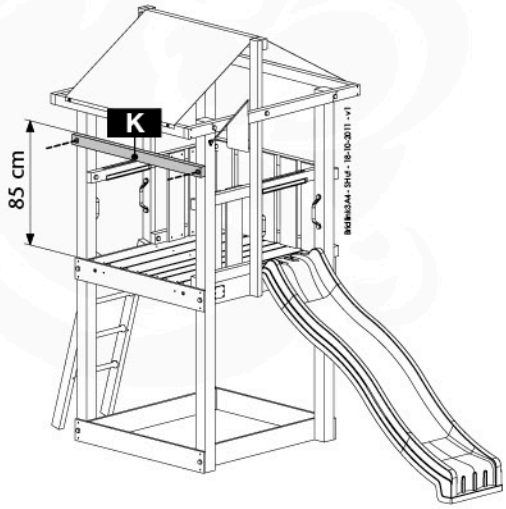


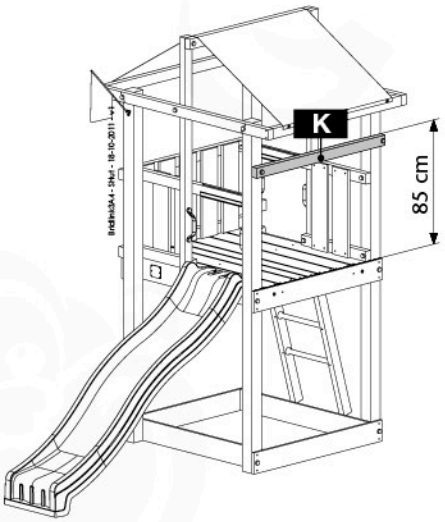


## 1c

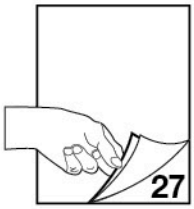


## 1c'

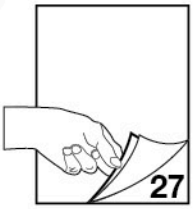


© 2018 Jungle Gym B.V. - www.junglegym.com

# Jungle Home

## 1

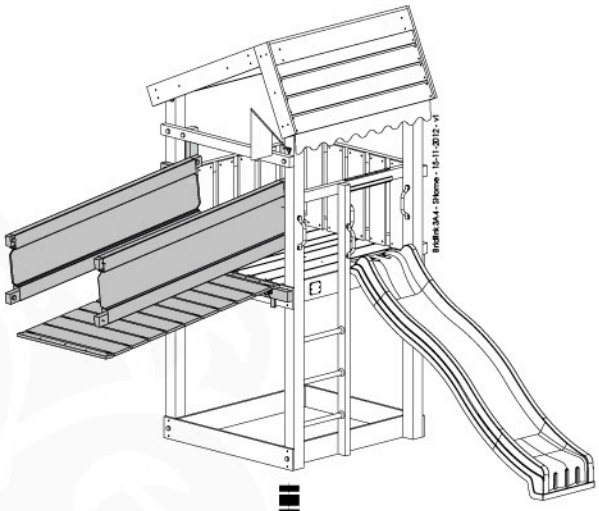

## 1'

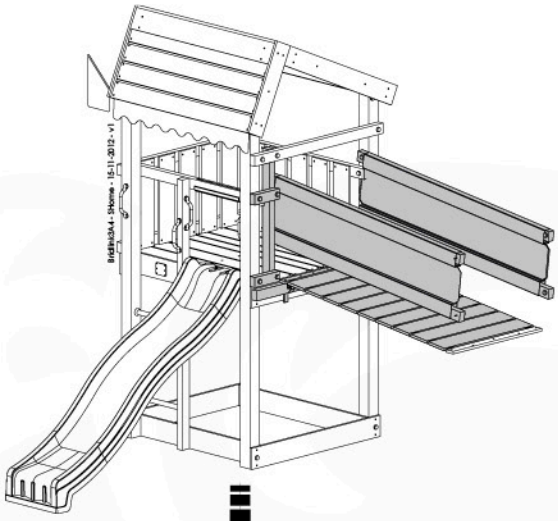

## 1a

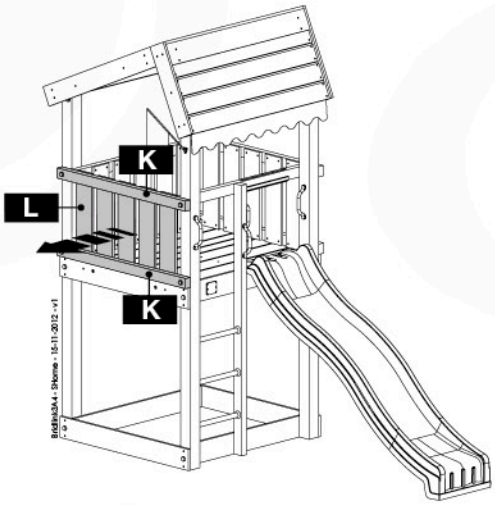


## 1a'

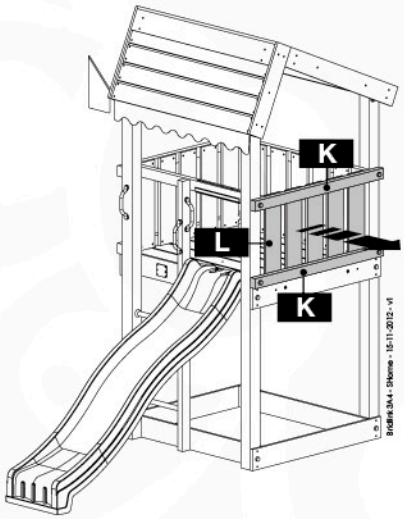


## 1b

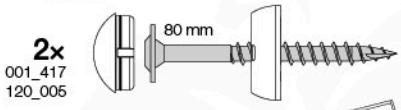


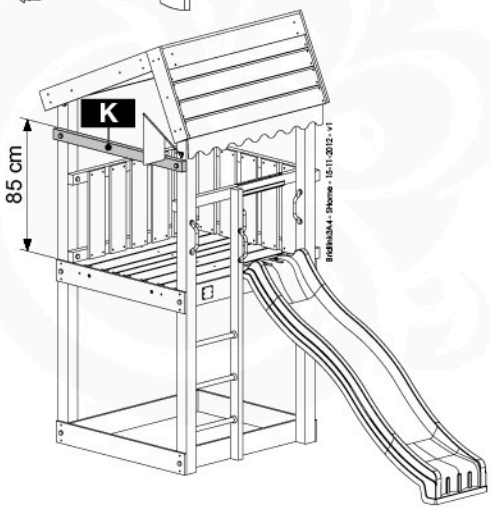


## 1b'

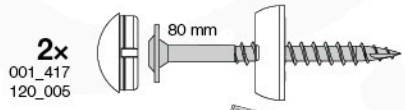


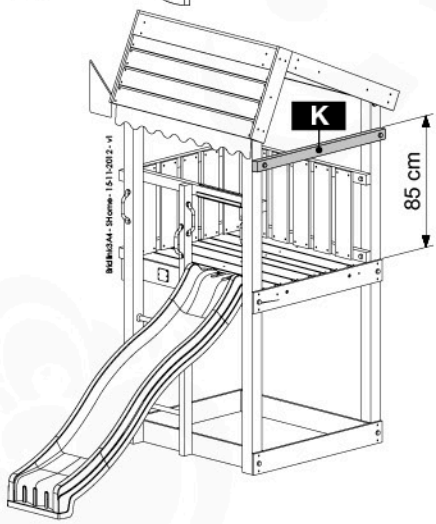


## 1c

## 1c'

# Jungle Casa

## 1

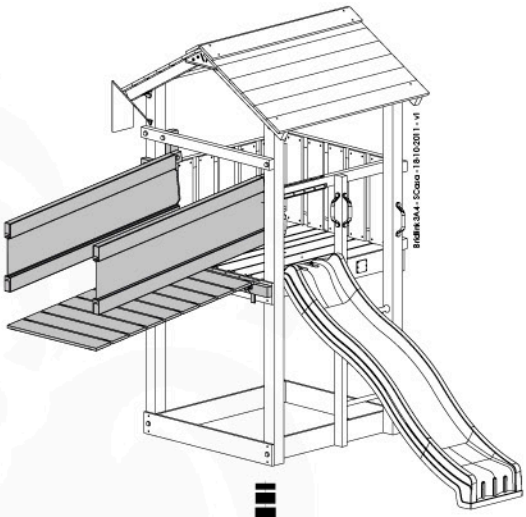

## 1'

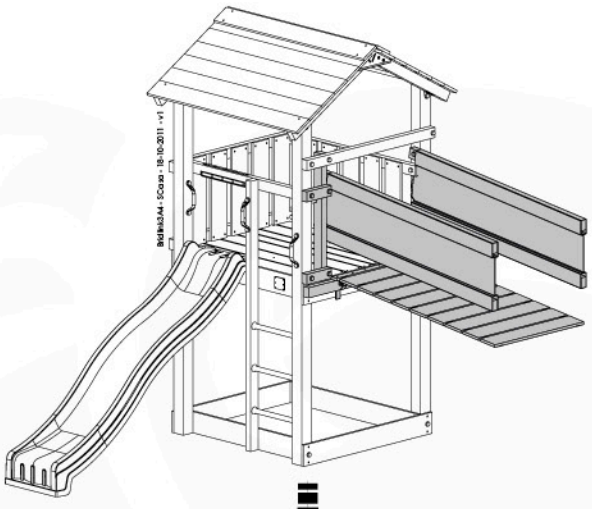

## 1a

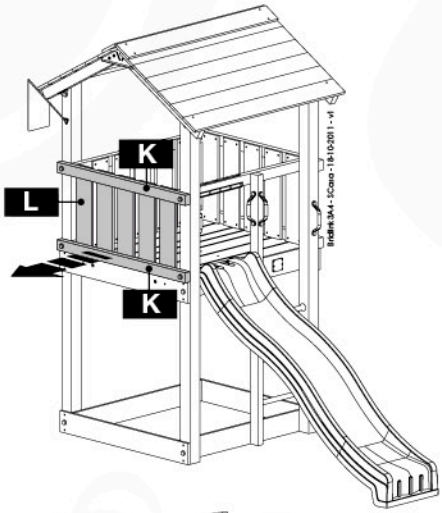


## 1a'

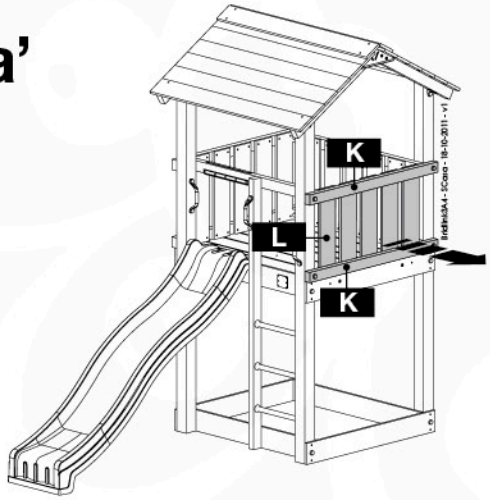


## 1b

2×
001_417
120_005

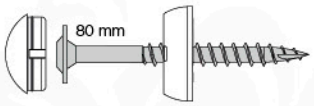


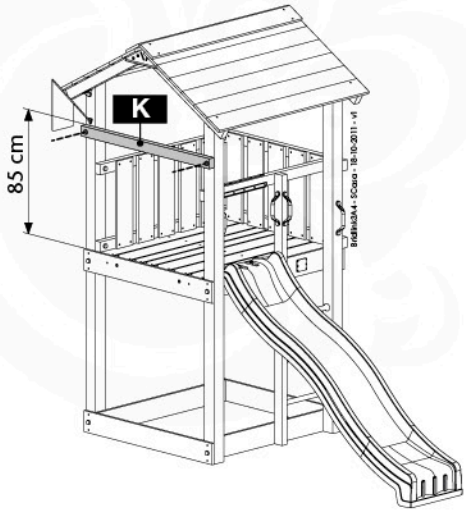


## 1b'

2×
001_417
120_005

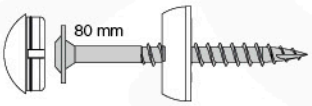


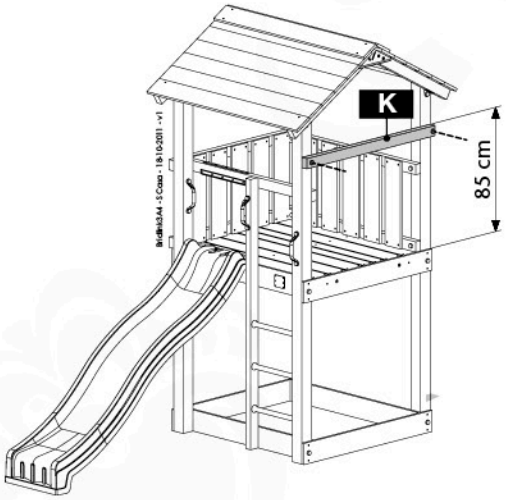


## 1c

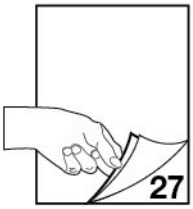


## 1c'

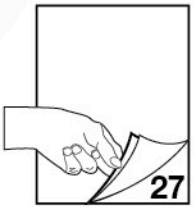

# Jungle Club

## 1

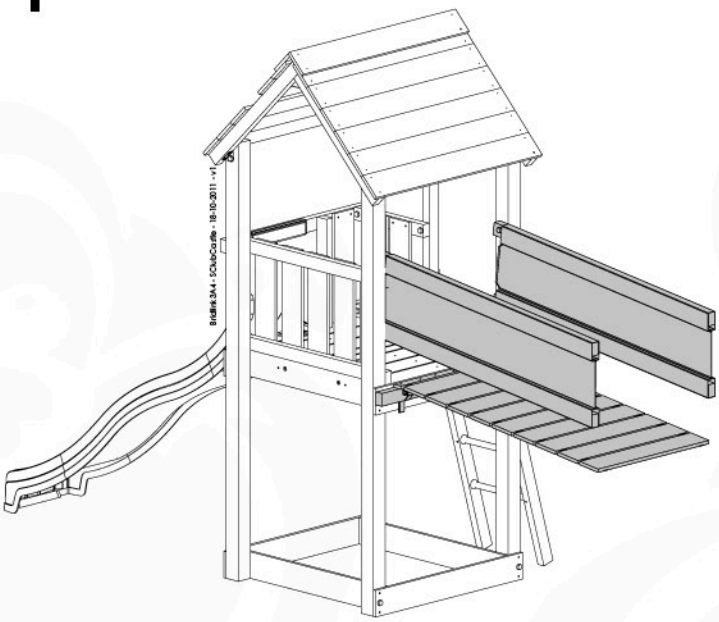

## 1a

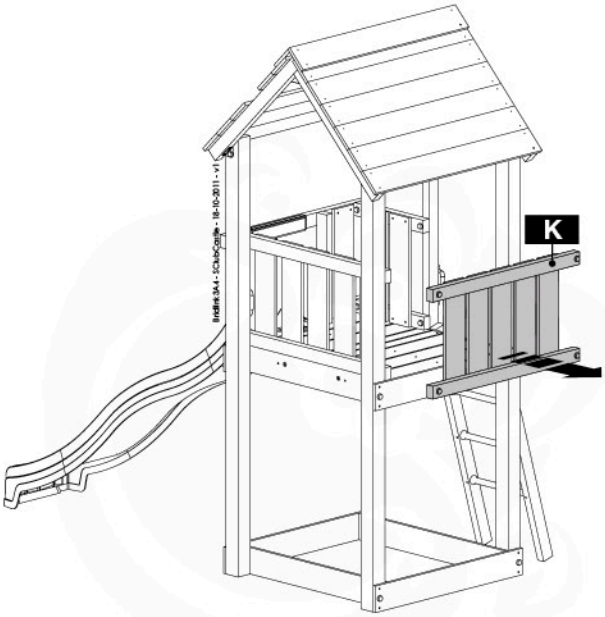


## 1b

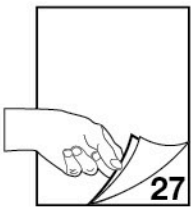

# Jungle Castle

## 1

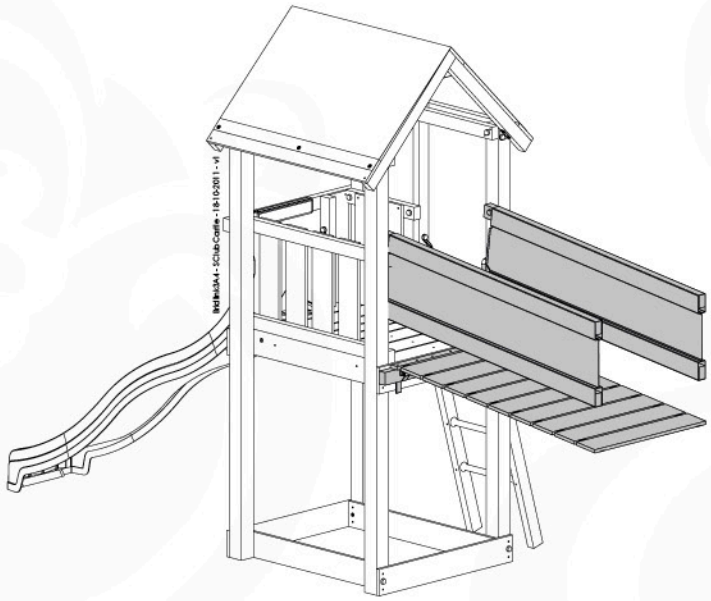

## 1a

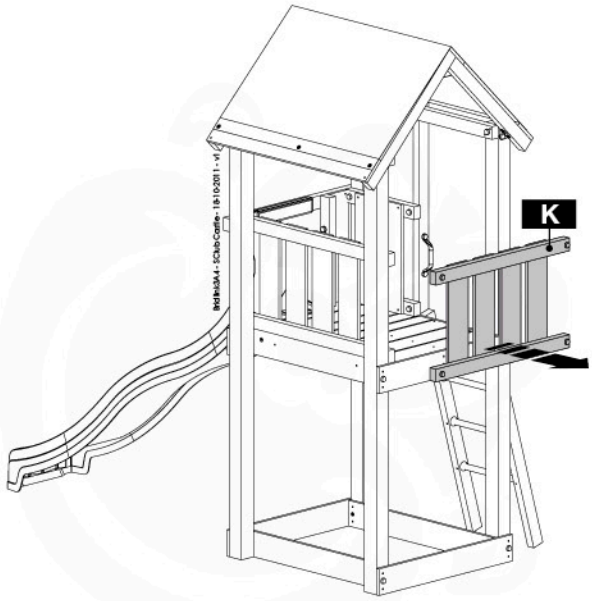


## 1b

# Jungle Tower

## 1

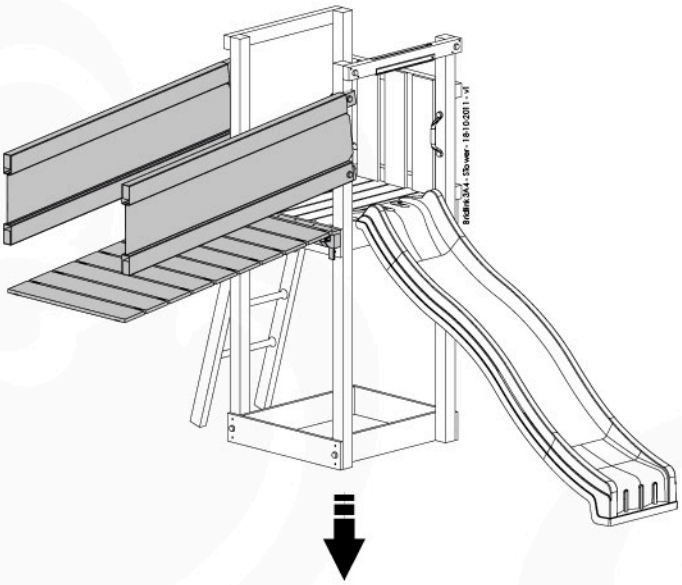

## 1’

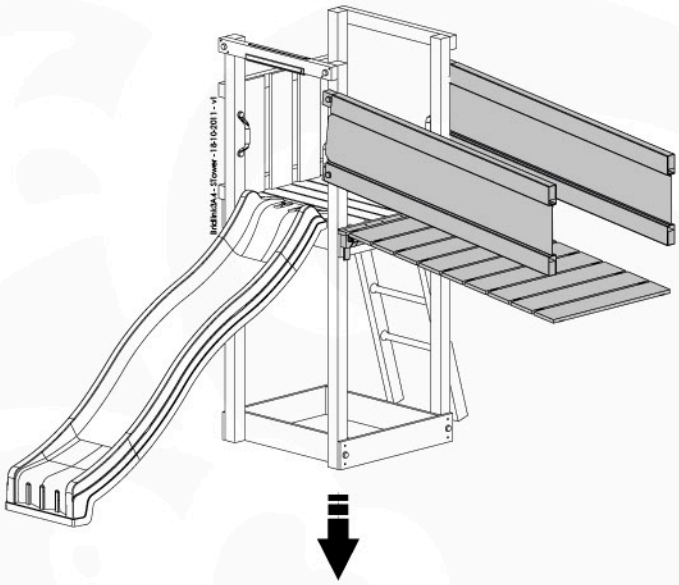

## 1a

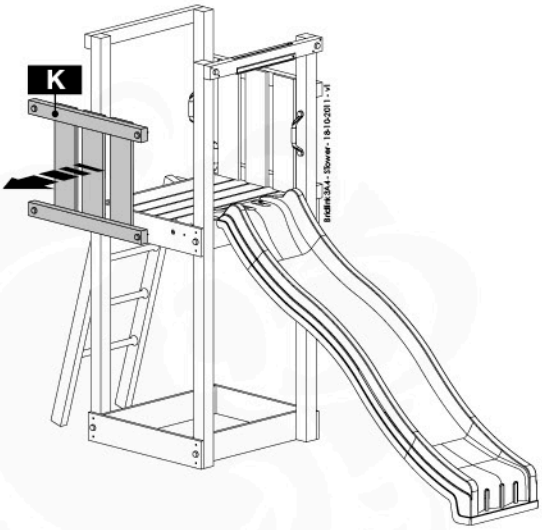


## 1a’

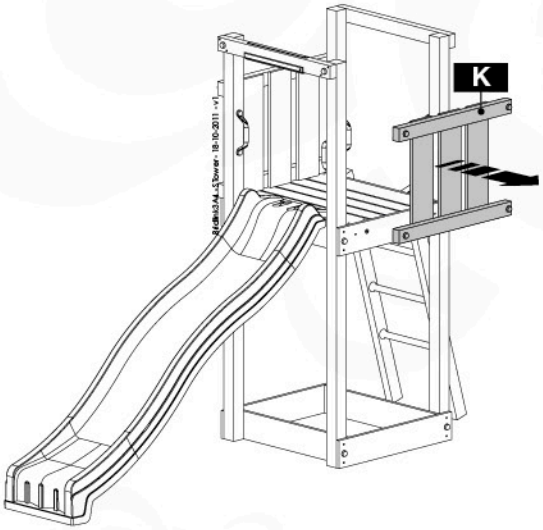


## 1b

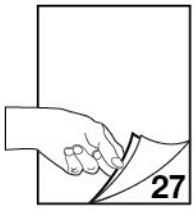


## 1b’

www.junglegym.com - © 2018 Jungle Gym B.V.

# Crazy Playhouse CXL

**1**

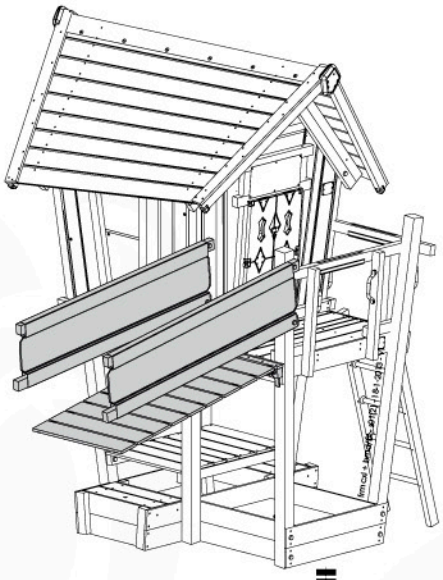

**1'**

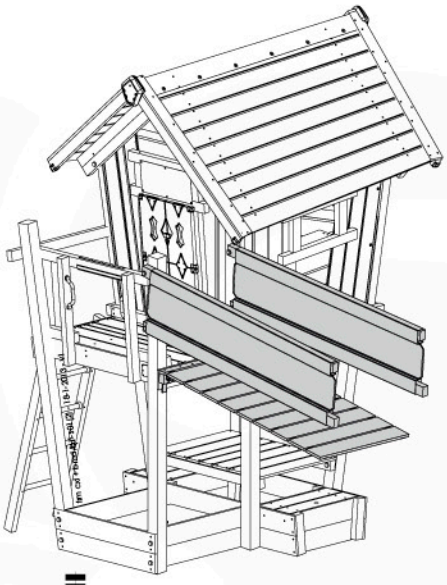

**1a**

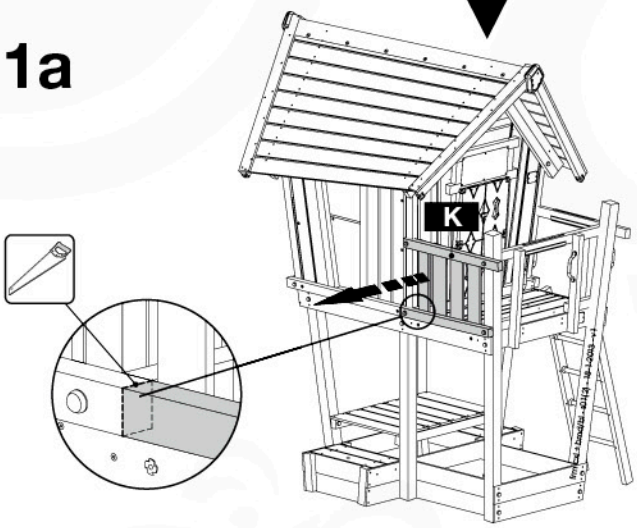


**1a'**

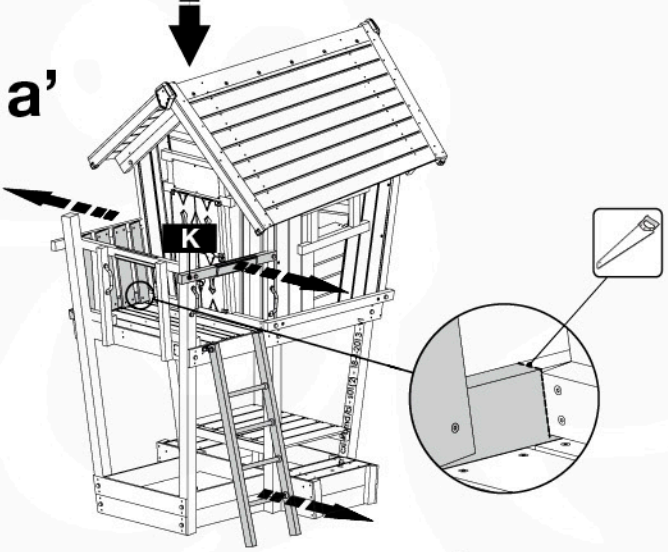


**1b**

**1b'**

**1c'**

© 2018 Jungle Gym B.V. - www.junglegym.com

# Jungle Playhouse XL

## 1a

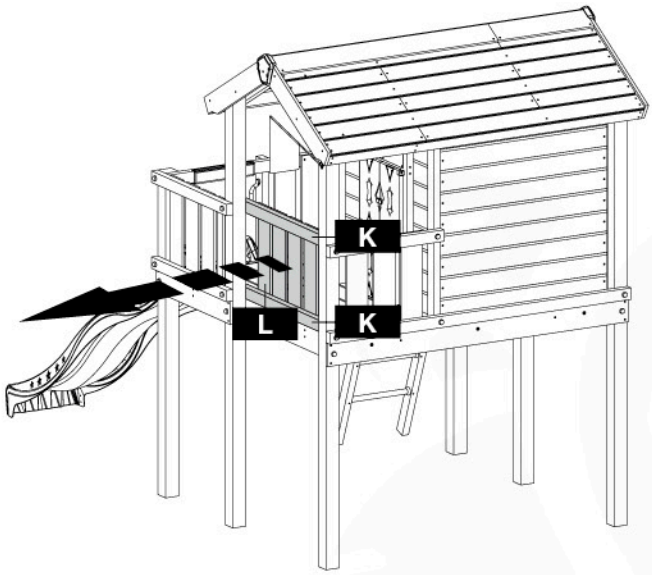


## 1b

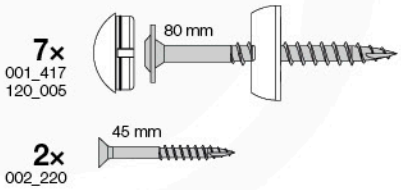


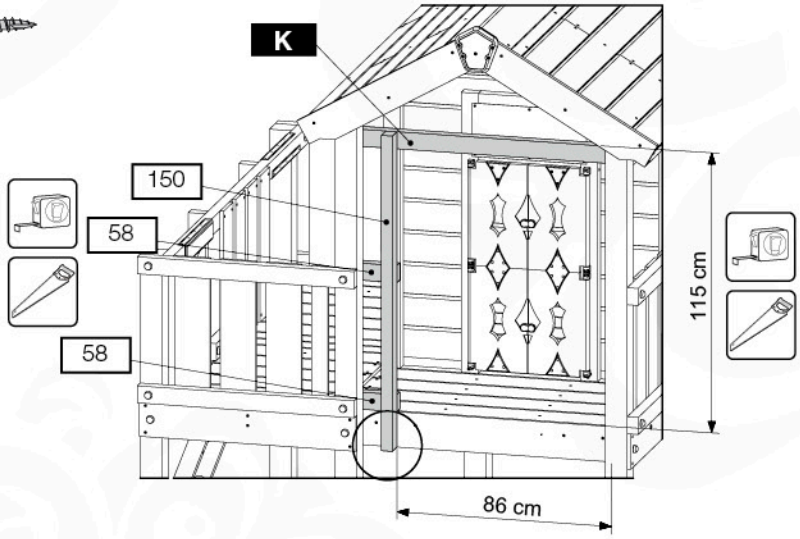


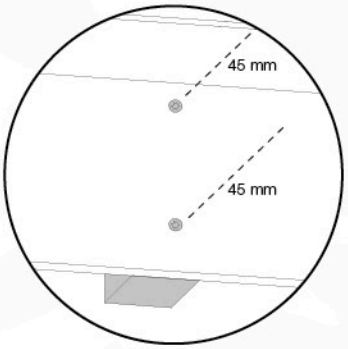


## 1c

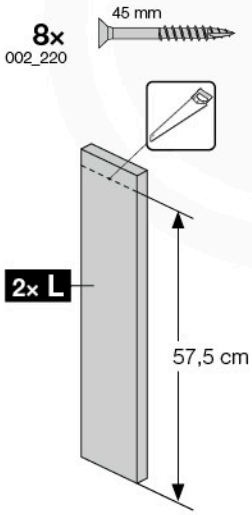


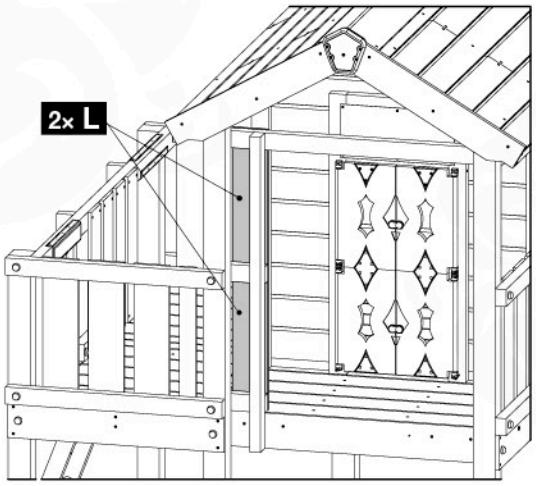


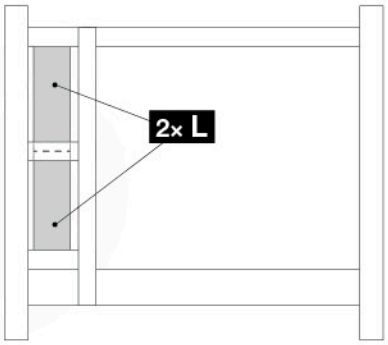



www.junglegym.com - © 2018 Jungle Gym B.V.

# 1d

**4x**
001_417

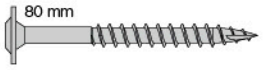


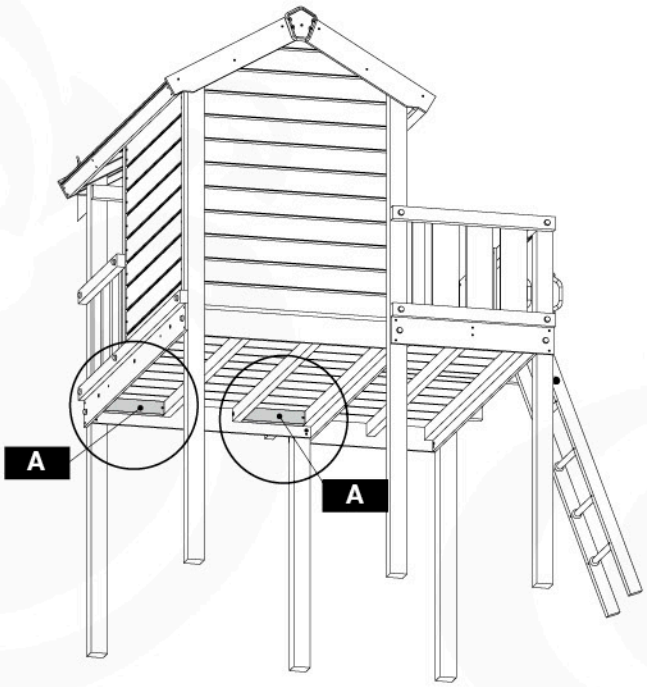


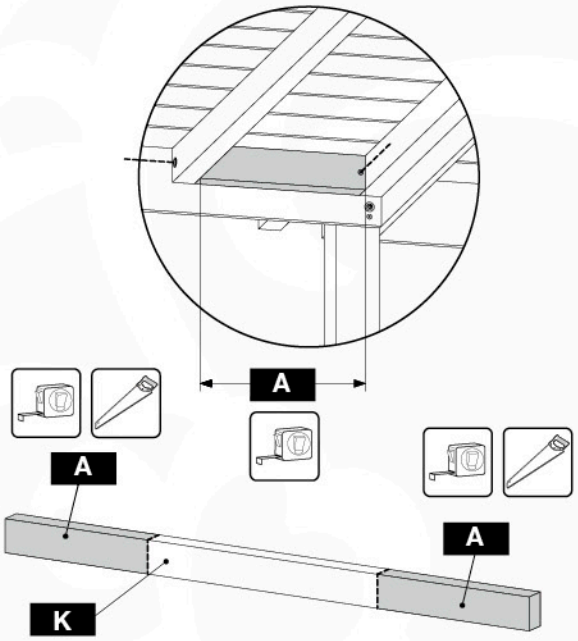


# 1e

**2x**
002_223

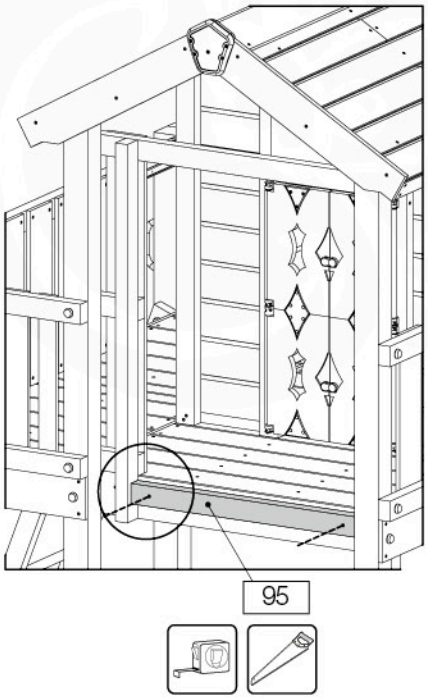


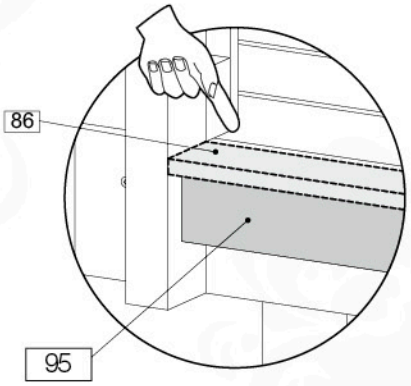


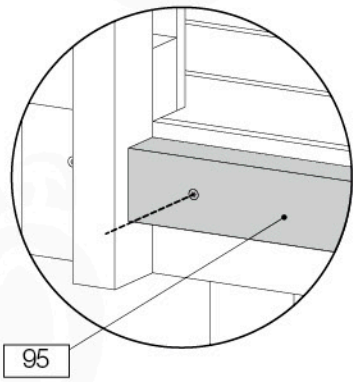


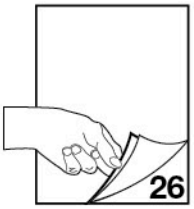

# 1f

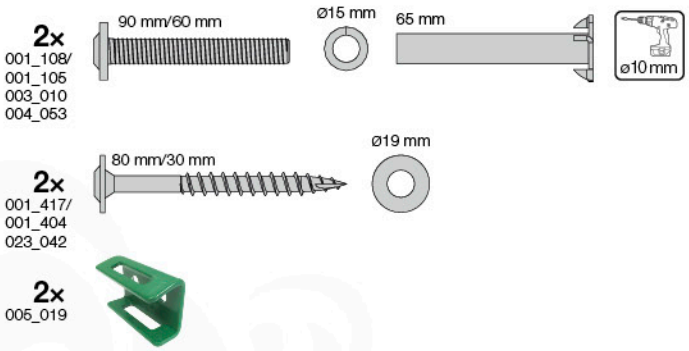


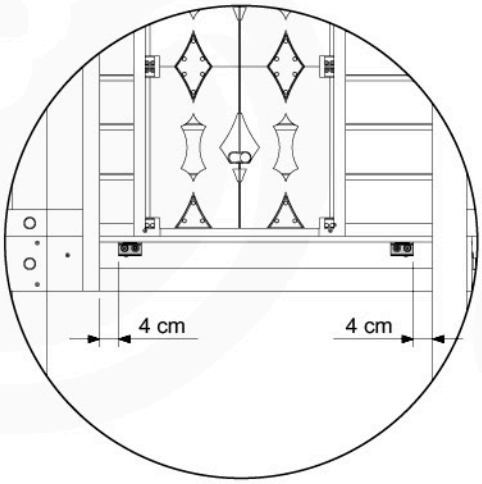


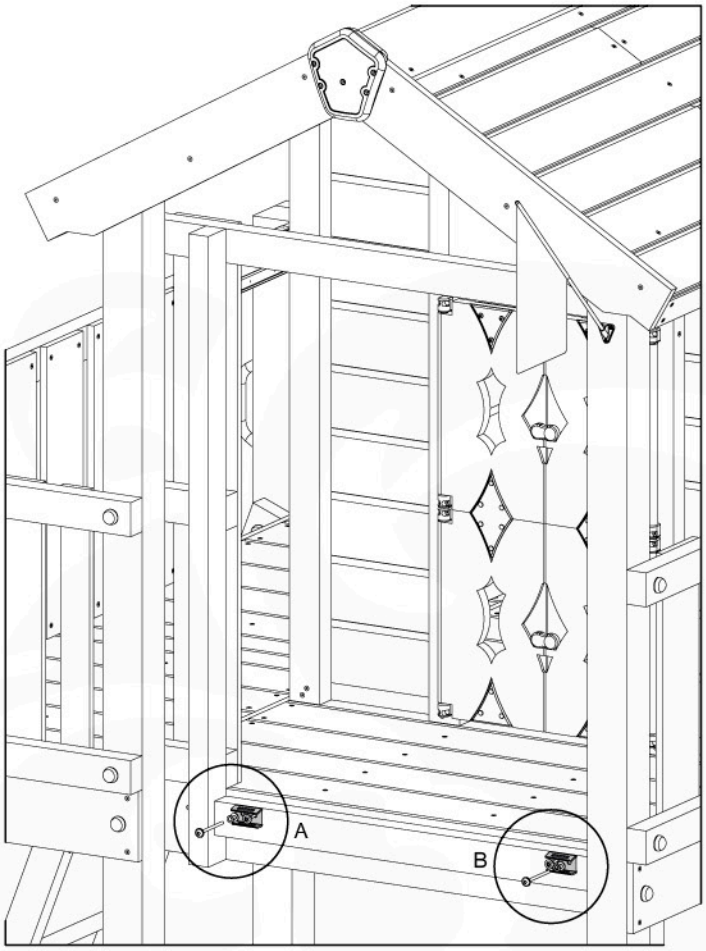


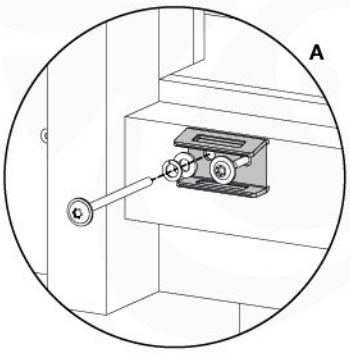


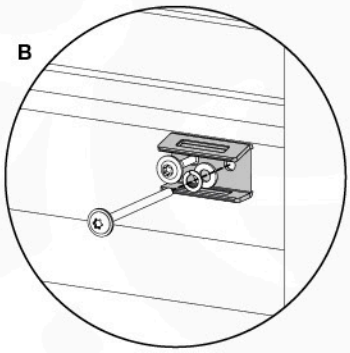


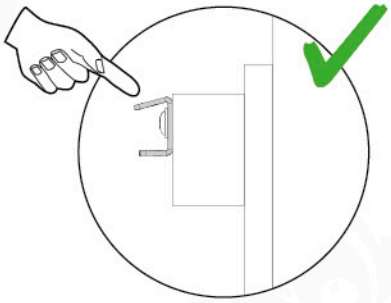

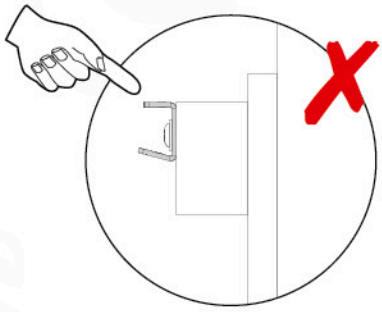

# 1g

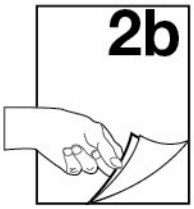



www.junglegym.com - © 2018 Jungle Gym B.V.

# 2

Jungle Barn 2
Jungle Farm 2
Jungle Mansion
Jungle Fort
Jungle Villa
Jungle Lodge
Jungle Cabin

Jungle Shelter
Jungle Cottage
Jungle House
Jungle Hut
Jungle Home
Jungle Casa

Jungle Palace
Jungle Farm 1
Jungle Chalet
Jungle Club
Jungle Castle

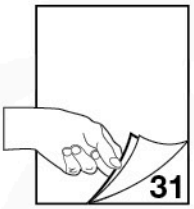


Jungle Barn 1
Jungle Tower

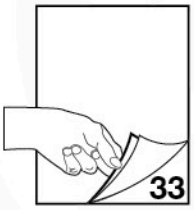


Crazy Playhouse CXL

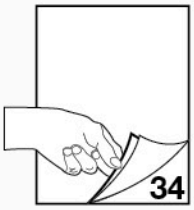


© 2018 Jungle Gym B.V. - www.junglegym.com

# 2a

- Jungle Barn 2
- Jungle Farm 2
- Jungle Mansion
- Jungle Fort
- Jungle Villa
- Jungle Lodge
- Jungle Cabin
- Jungle Shelter
- Jungle Cottage
- Jungle House
- Jungle Hut
- Jungle Home
- Jungle Casa

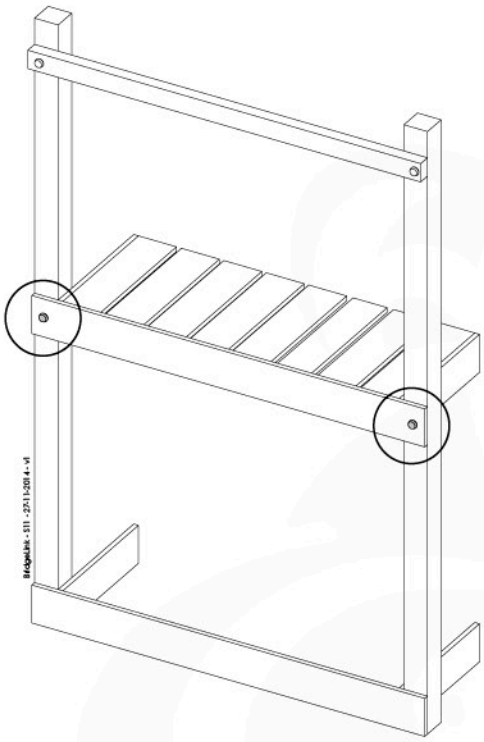

# 2b

**2x**
001_111/
001_113
003_010
003_040
004_053
120_005

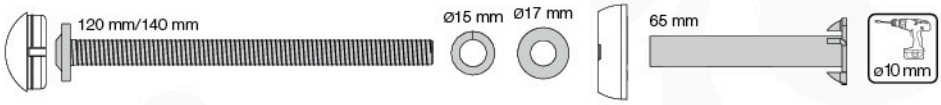


**2x**
001_411
120_005

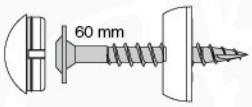


| | |
|---|---|
| * 401_020 Jungle Villa: | 150 |
| * 401_065 Jungle Shelter: | 150 |

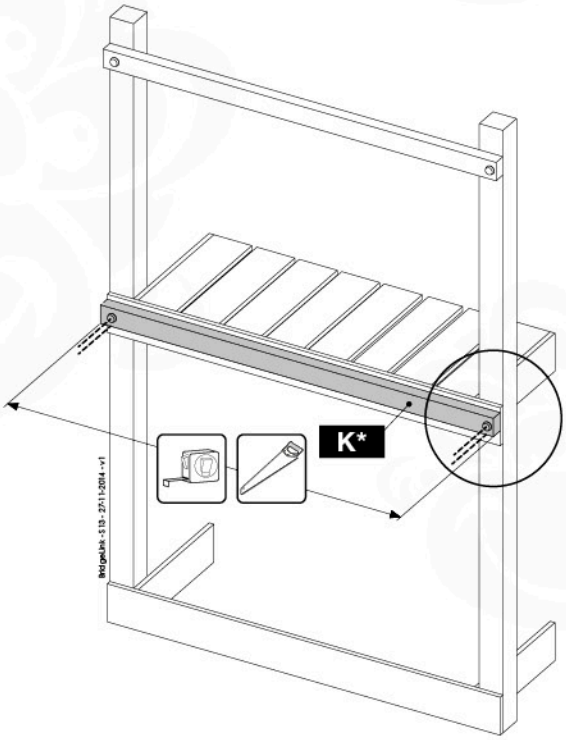


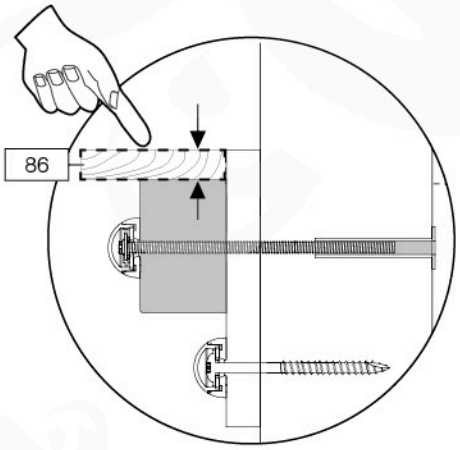


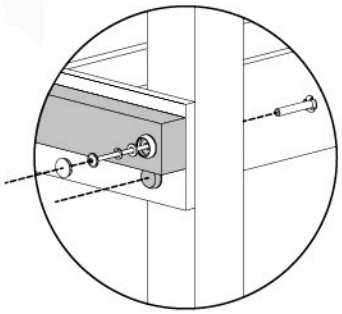


www.junglegym.com - © 2018 Jungle Gym B.V.

# 2c

**1x**
001_417
120_005

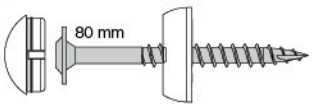


**2x**
002_223

| | |
|---|---|
| * 401_010 Jungle Fort: | K |
| * 401_095 Jungle House: | 150 |

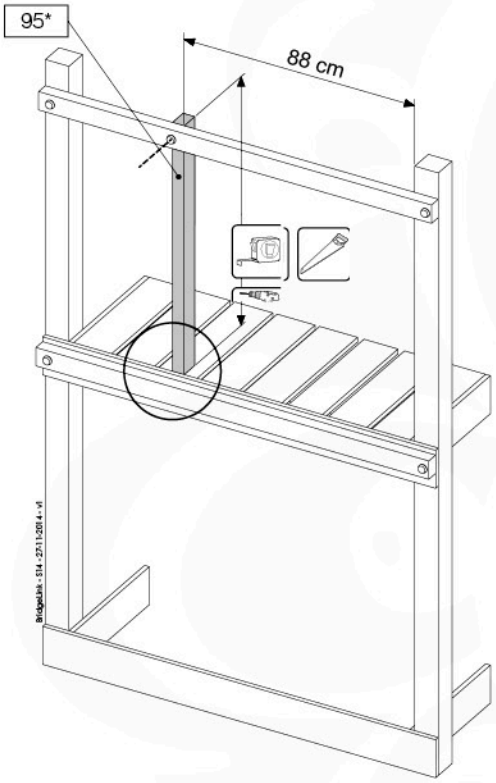


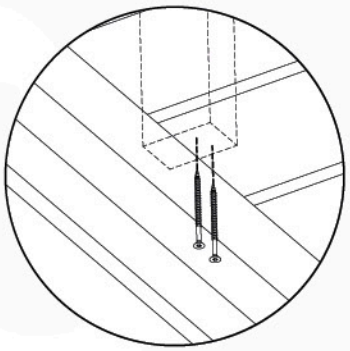

# 2d

**4x**
001_417
120_005

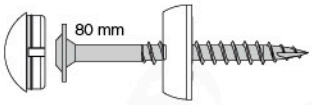


| | |
|---|---|
| * 401_007 Jungle Barn: | 150 |
| * 401_010 Jungle Fort: | 150 |

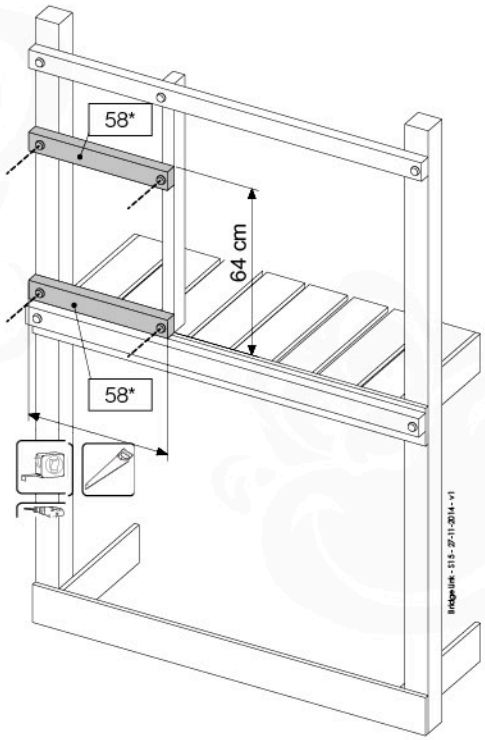

# 2e

**8 - 32×** 002_220

**2×** 008_043

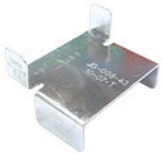

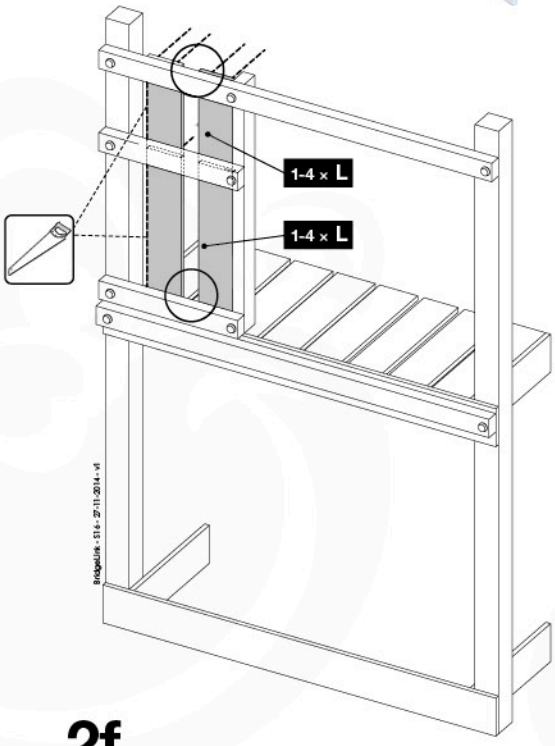


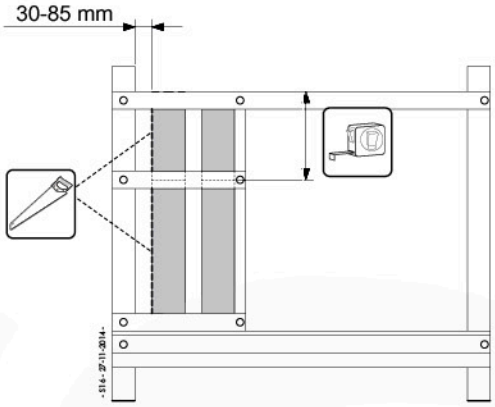


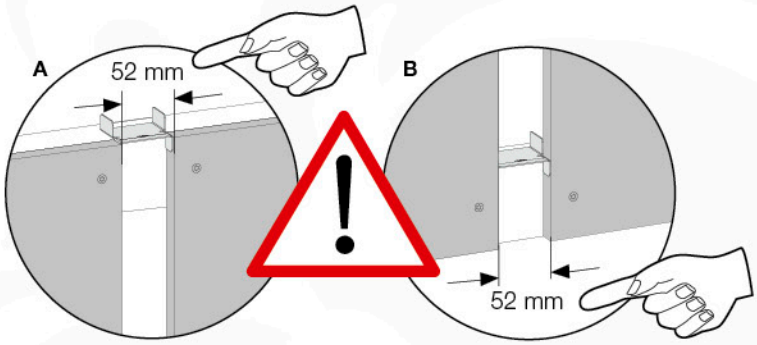


# 2f

**2×** 001_108/ 001_105/ 001_104 003_010 004_053

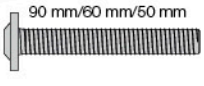

**2×** 001_417/ 001_404 023_042

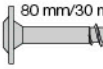

**2×** 005_019

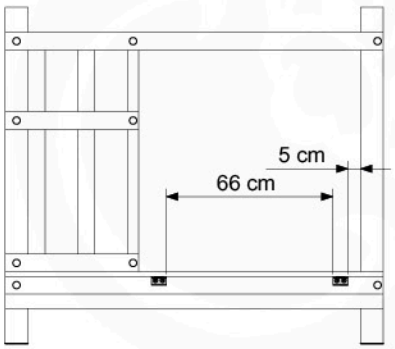


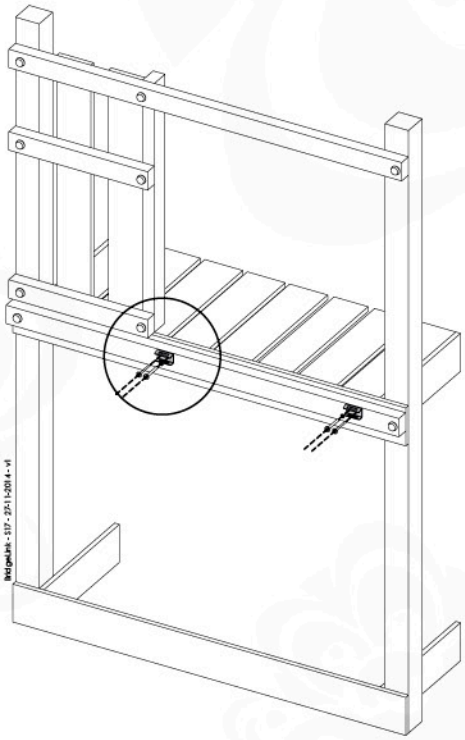

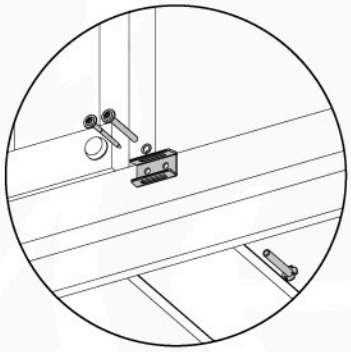

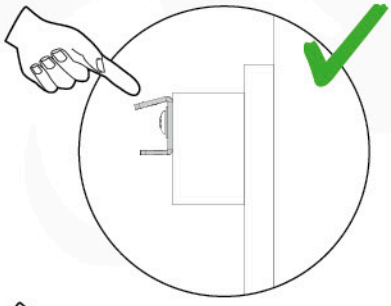

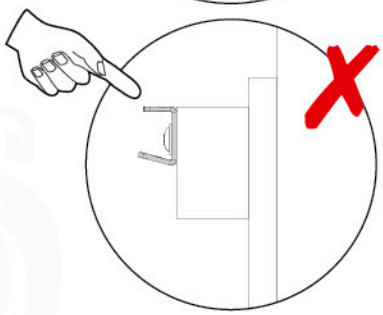

# 2g

www.junglegym.com - © 2018 Jungle Gym B.V.

# 2a’

Jungle Palace

Jungle Farm 1

Jungle Chalet

Jungle Club

Jungle Castle

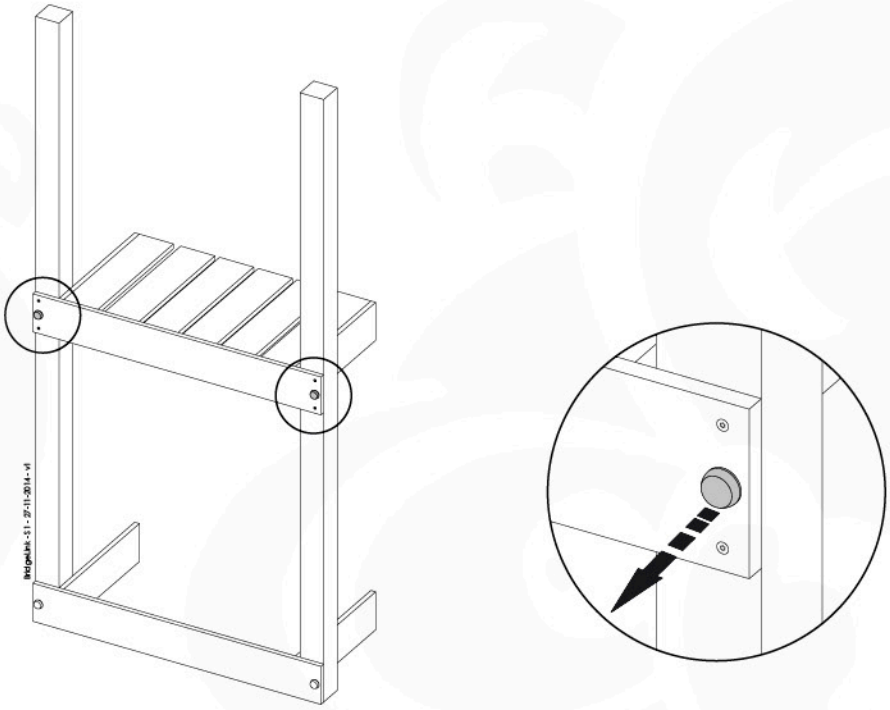

# 2b’

**2x**
001_111/
001_113
003_010
003_040
004_053
120_005

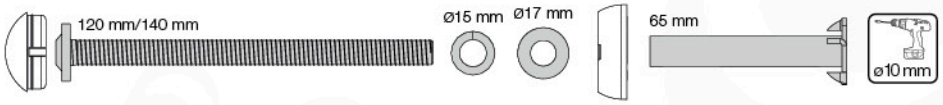


**2x**
001_411
120_005

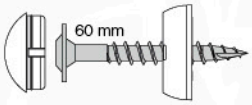


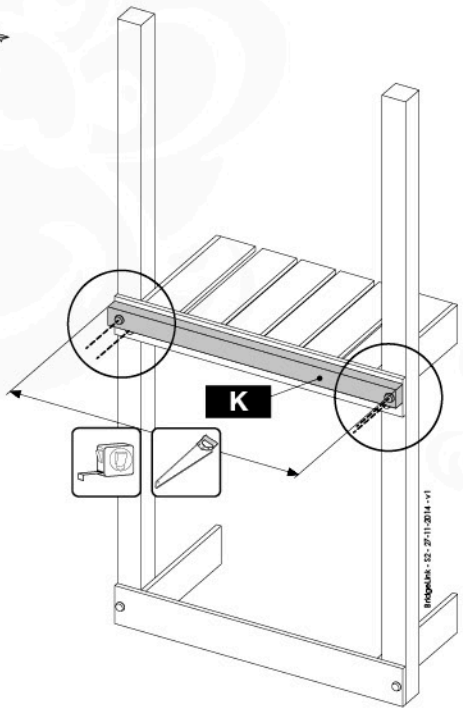


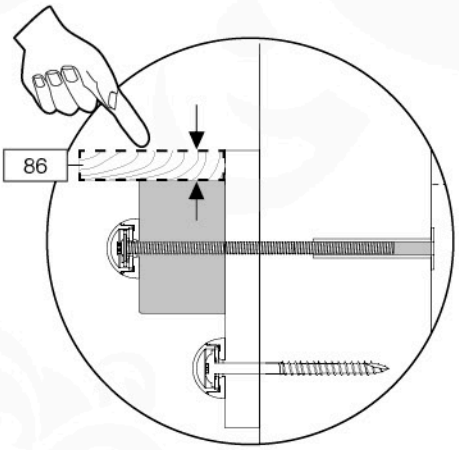


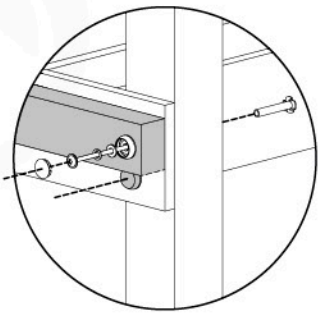

# 2c’

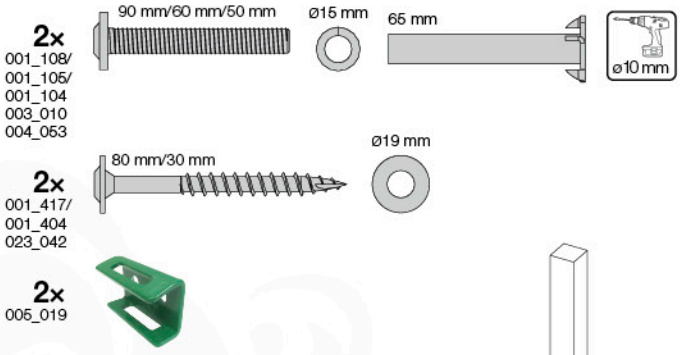


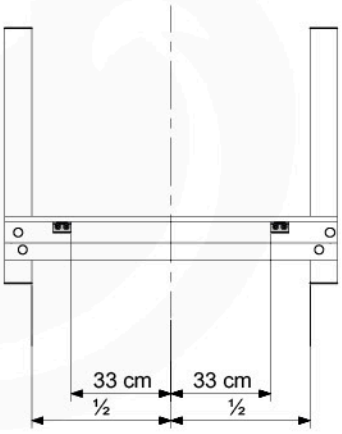


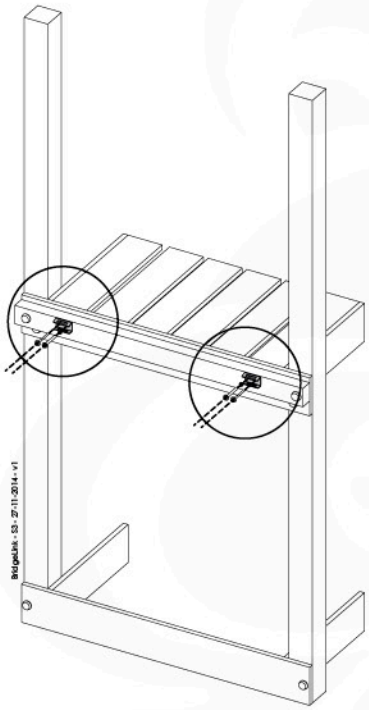

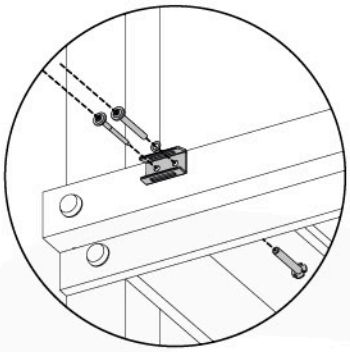

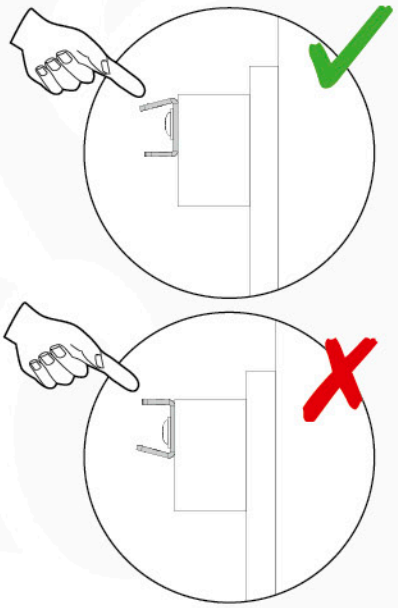

# 2d’

www.junglegym.com - © 2018 Jungle Gym B.V.

# 2a”

Jungle Barn 1

Jungle Tower

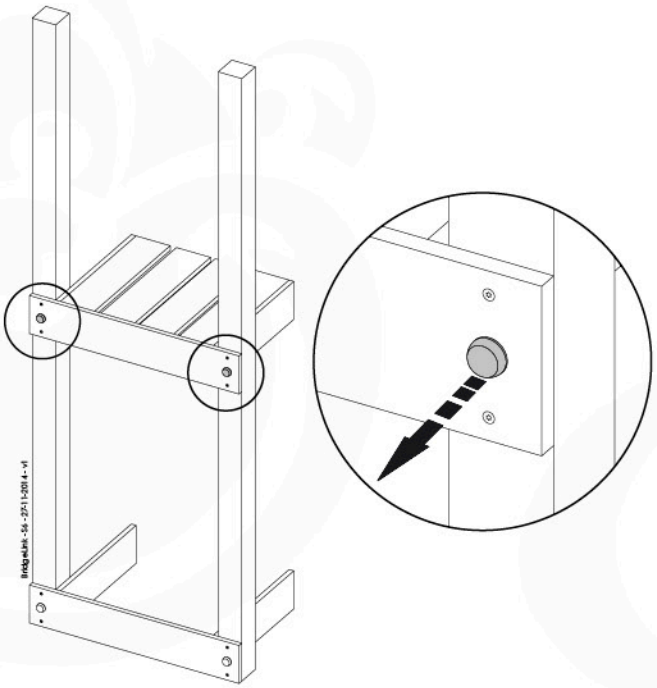

# 2b”

**2×**
001_411
120_005

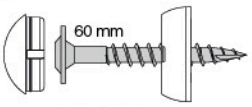


**2×**
002_223

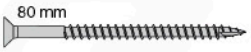


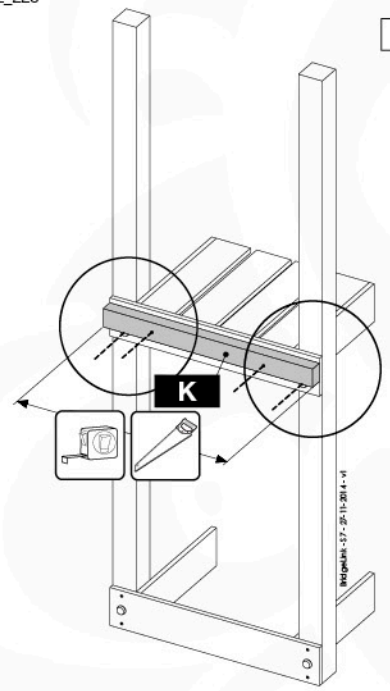


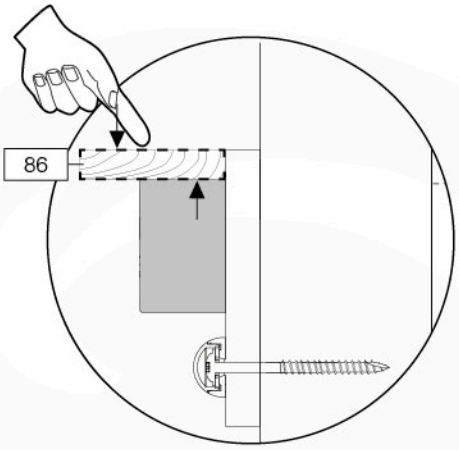


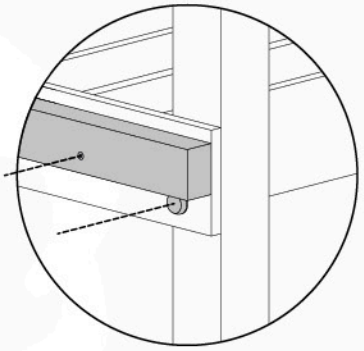

# 2c”

**1×**
001_111/
001_113
003_010
004_053

**2×**
001_417
023_042

**2×**
005_019

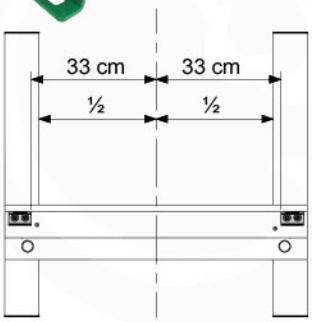


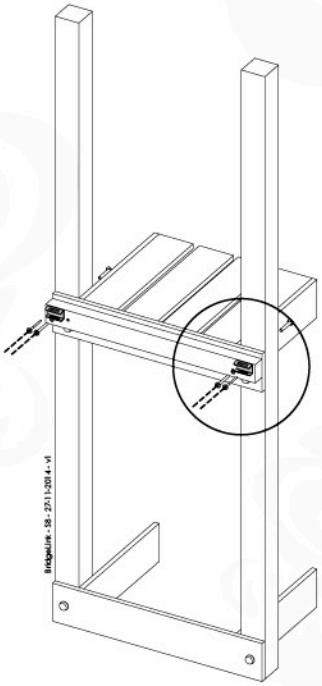

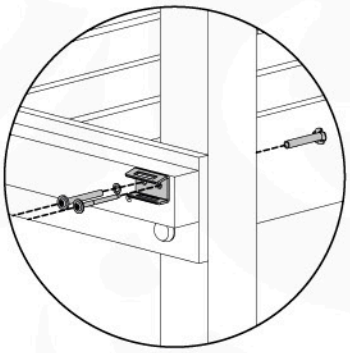

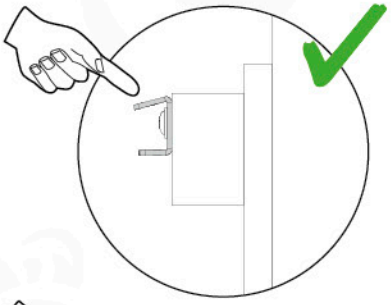

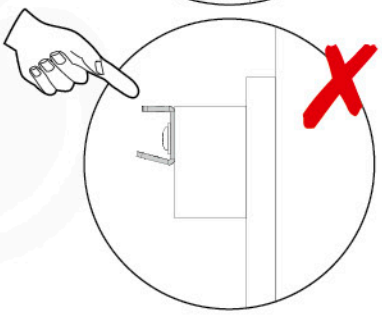

# 2d”

# 2a’’’

Crazy
Playhouse CXL

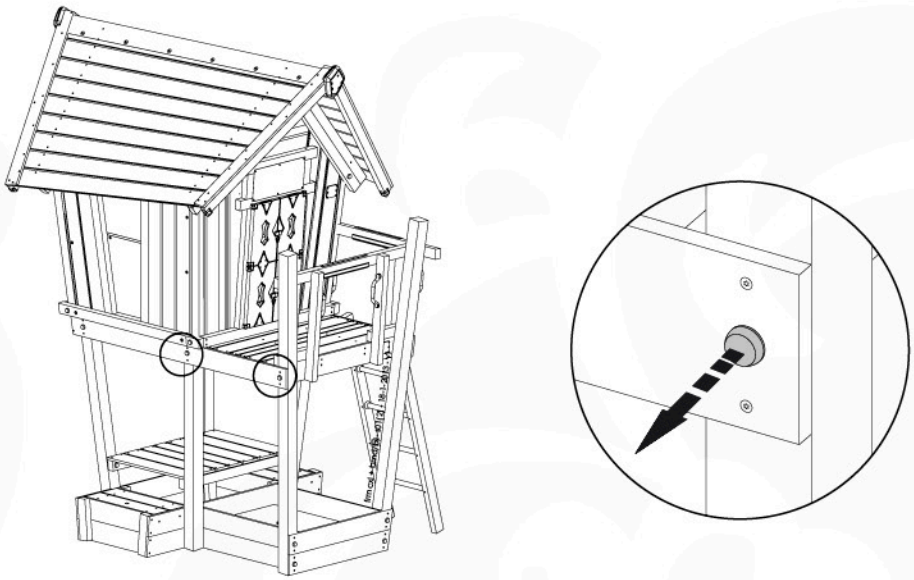

# 2b’’’

**3×**
001_417
120_005

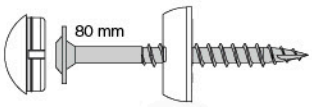


**1×**
002_223

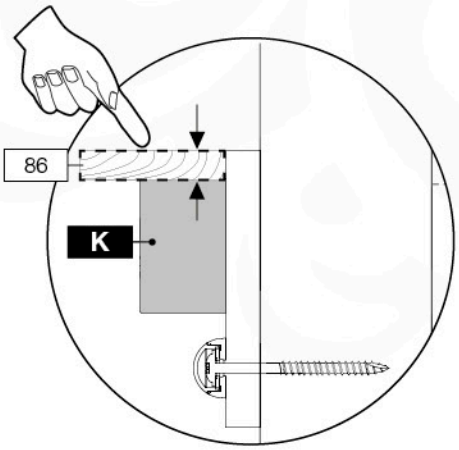


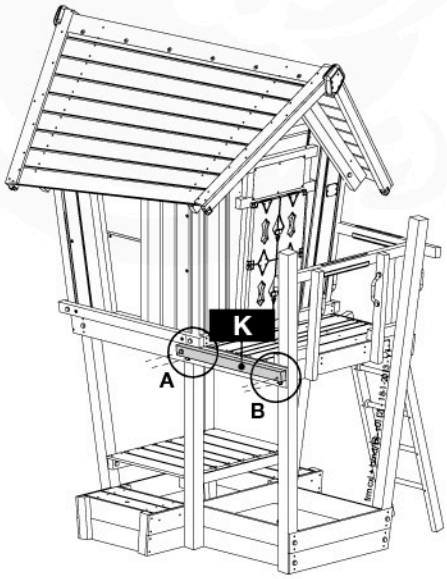


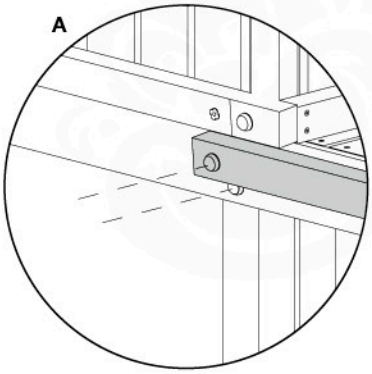


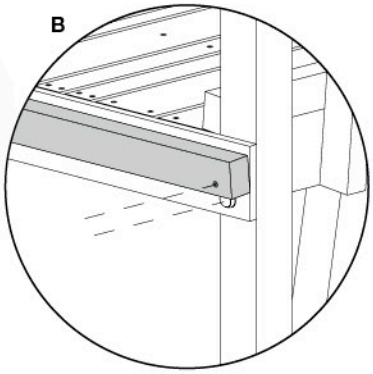



www.junglegym.com - © 2018 Jungle Gym B.V.

# 2c'''

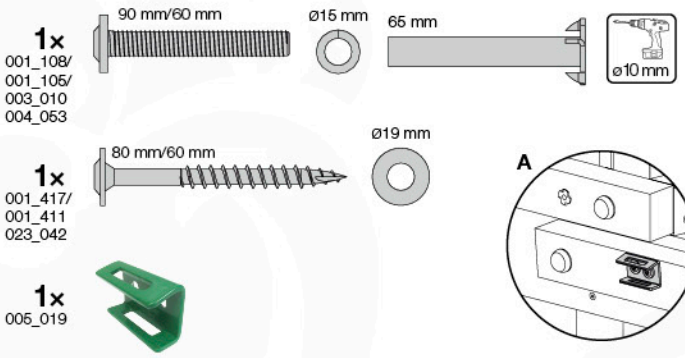
1×
001_108/
001_105/
003_010
004_053
90 mm/60 mm
Ø15 mm
65 mm
ø10 mm
1×
001_417/
001_411
023_042
80 mm/60 mm
Ø19 mm
1×
005_019


A

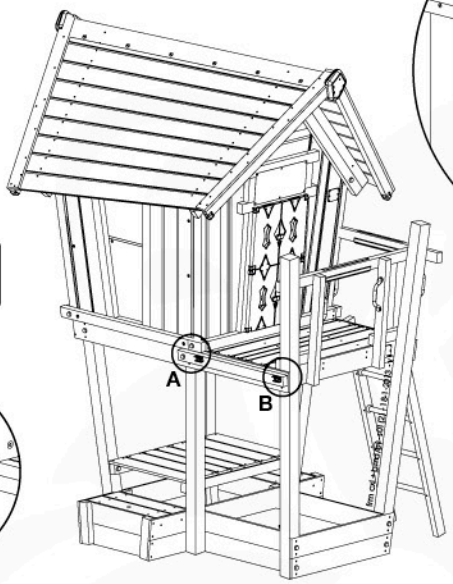
A
B

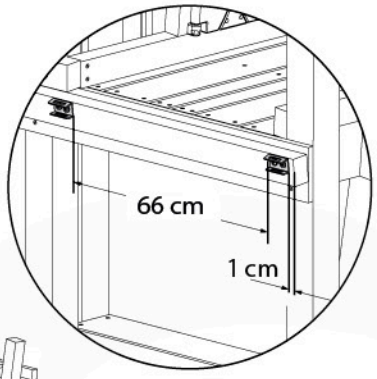
66 cm
1 cm

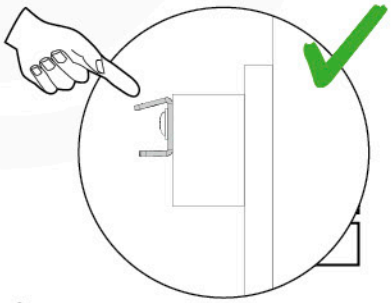

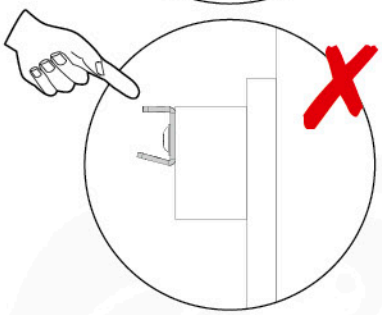

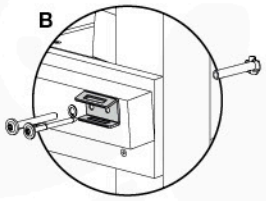
B

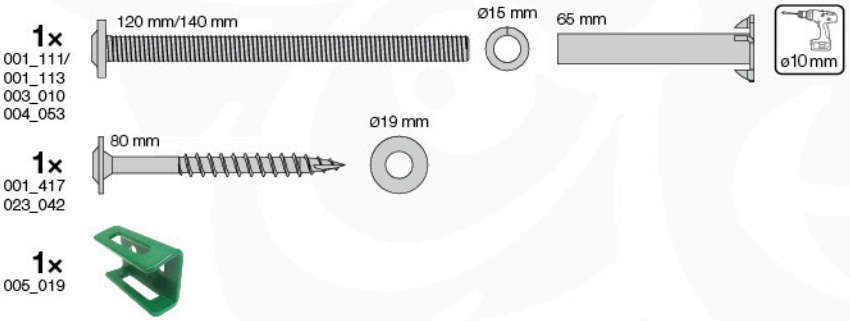
1×
001_111/
001_113
003_010
004_053
120 mm/140 mm
Ø15 mm
65 mm
ø10 mm
1×
001_417
023_042
80 mm
Ø19 mm
1×
005_019

# 2d'''

2b

## Playtowers

| | | | | | | | | |
|---|---|---|---|---|---|---|---|---|
| XL | XL | XL | XL | L | L | L | M | M |
| Jungle Palace 801_005 | Jungle Barn 801_007 | Jungle Farm 801_008 | Jungle Mansion 801_009 | Jungle Fort 801_010 | Jungle Chalet 801_013 | Jungle Villa 801_020 | Jungle Lodge 801_040 | Jungle Cabin 801_060 |

| | | | | | | | | | |
|---|---|---|---|---|---|---|---|---|---|
| M | M | M | S | S | S | S | S | S | XS |
| Jungle Shelter 801_065 | Jungle Cubby 801_070 | Jungle Cottage 801_090 | Jungle House 801_095 | Jungle Hut 801_100 | Jungle Home 801_103 | Jungle Casa 801_105 | Jungle Club 801_110 | Jungle Castle 801_120 | Jungle Tower 801_200 |

## Playhouses

Crazy Playhouse 830_140 + Playhouse Frame CXL 830_251 = Crazy Playhouse CXL 835_251

Jungle Playhouse 830_150 + Playhouse Frame L 830_252 = Jungle Playhouse L 835_252

Jungle Playhouse 830_150 + Playhouse Frame XL 830_253 = Jungle Playhouse XL 835_253

## Modules

1-Swing Module 850_176

2-Swing Module 850_177

Climb Module 850_230

Bridge Module 850_240

Playhouse Module 850_246 (_247) — 125 cm (145 cm)

Balcony Module 850_255

Mini Market Module 850_261 — 110 cm

Mini Picnic Module 850_262(_263) — 120 cm (160 cm)

Boat Module 850_410

Train Module 850_415

## Swings

Jungle Peak 801_300

Jungle Swing 801_601 — 240 cm, 220 cm

Jungle Swing 801_602 — 270 cm, 250 cm

## Links

Bridge Link 870_100

Net Link 870_105

## Accessories

Climbing Rope 201_060

Fireman's Pole 201_275

Rock Wall 450_200

1 Step Ladder 450_300

**Wavy Star Slide XL** — 125 cm, 176 cm, 49 cm

- 324_100 Yellow
- 324_200 Blue
- 324_300 Green
- 324_400 Red
- 324_500 Fuchsia
- 324_600 Dark Green

**Wavy Star Slide XXL** — 145 cm, 215 cm, 49 cm

- 334_100 Yellow
- 334_200 Blue
- 334_300 Green
- 334_400 Red
- 334_500 Fuchsia
- 334_600 Dark Green

Sling Swing Kit Yellow 250_001

Monkey Bar Kit Blue 250_013

Baby Swing Kit Red 250_025

Swing Seat Kit Red 250_034

Twist Disk Kit Green 250_053

Steering Wheel Yellow 201_280

Fun Phone 201_285

StarOscope™ 201_290

PeekOscope™ 201_295

Tic Tac Toe 450_310

Bucket 450_320

Talking Tube™ 450_330

Swing Hook Screw 2x 201_115

Bolt Caps 201_200

Cat Stop™ 201_220 — 150 x 160 cm

Handgrips
- 201_250 Yellow
- 201_260 Blue
- 201_270 Green

Ground Anchors 250_070

RopeLocks™ 201_400

Swing Rope Green 201_530

v 2.10.1

Jungle Gym®
BACKYARD PLAYGROUNDS

Availability of Jungle Gym® products may vary between distributors and countries.
Subject to alterations and printing errors. All rights reserved. Printed in China.
P.O. Box 75083 - 1070 AB - Amsterdam - The Netherlands

www.junglegym.com

Part 2b

# Assembly

# Bridge Module

850_240

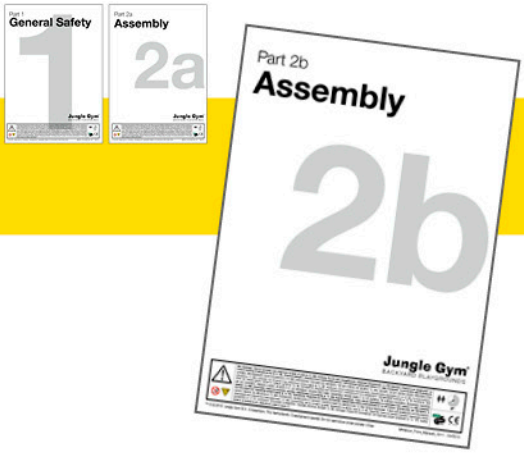


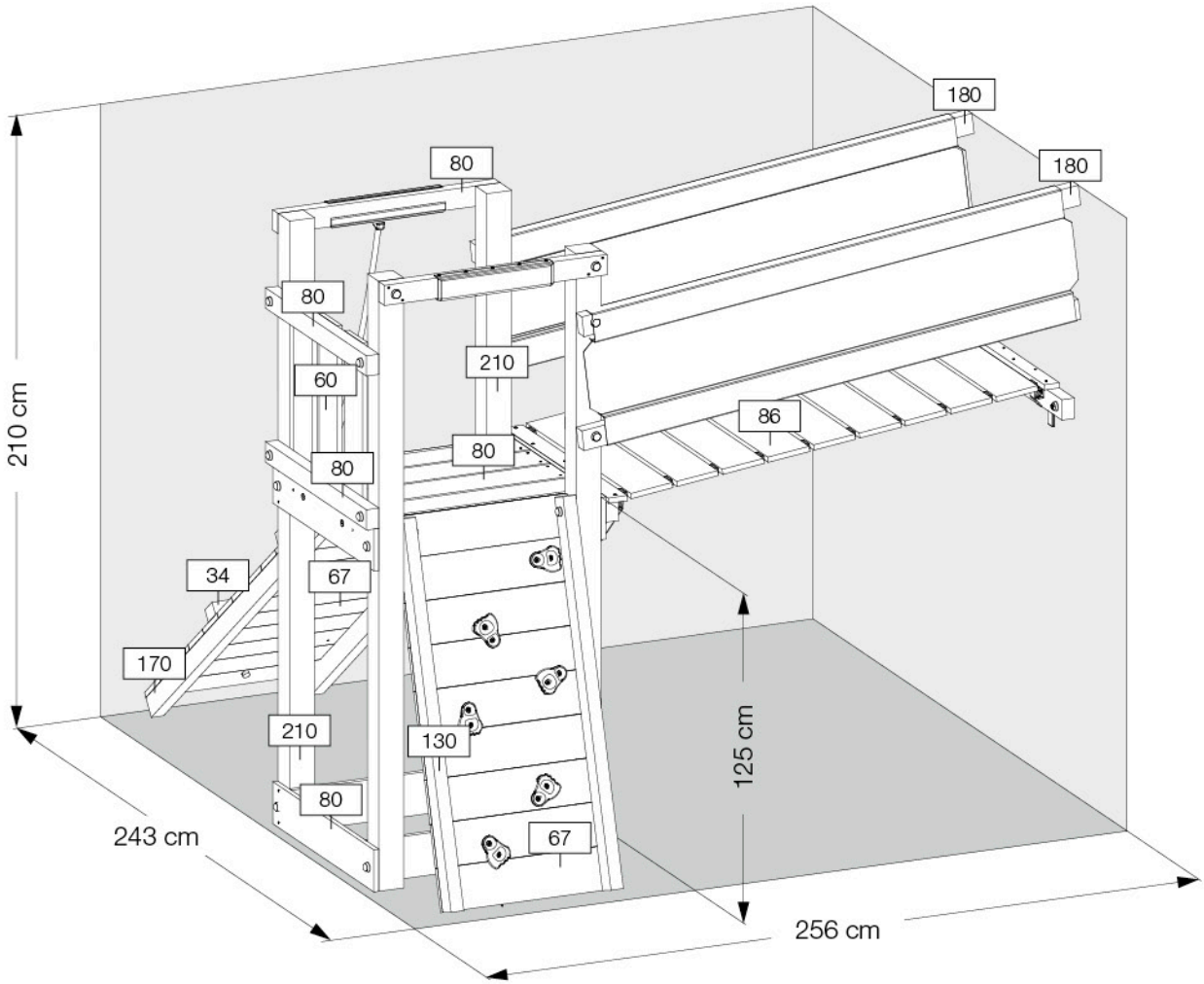


Jungle Gym®
BACKYARD PLAYGROUNDS

**EN.** Warnings. Only for domestic use. Maximum number of users is 5. **DE.** Achtung. Nur für den Hausgebrauch. Maximale Benutzerzahl: 5. **FR.** Attention. Réservé à un usage privé. Le nombre maximal d'utilisateurs est de 5. **NL.** Waarschuwingen. Uitsluitend voor huishoudelijk gebruik. Het maximale aantal gebruikers is 5. **BG.** Внимание. За употреба само в домашни условия. Максималният брой потребители е 5. **CS.** Varování. Jen pro domácí použití. Maximální počet uživatelů je 5. **DA.** Advarsler. Kun til privat brug. Maksimum antal brugere er 5. **EL.** Προειδοποιήσεις. Μόνο για οικιακή χρήση. Μέγιστος αριθμός χρηστών 5. **ES.** Advertencias. Sólo para uso doméstico. Número máximo de usuarios: 5. **ET.** Hoiatused. Ainult koduseks kasutamiseks. Maksimaalne kasutajate arv on 5. **FI.** Varoitukset. Ainoastaan kotikäyttöön. Käyttäjiä yhteensä enintään 5. **HR.** Upozorenja. Samo za kućansku uporabu. Maksimalan broj korisnika je 5. **HU.** Figyelmeztetések. Csak otthoni használatra! A használók max. száma: 5. **IS.** Varnaðarorð. Eingöngu fyrir einkanotkun í heimahúsum og á einkalóðum. Hámarksfjöldi notenda er 5. **IT.** Avvertenze. Solo per uso domestico. Massimo numero di utenti è 5. **LT.** Įspėjimai. Tik buitiniam naudojimui. Maksimalus naudotojų skaičius 5. **LV.** Brīdinājumi. Izmantot tikai mājās. Maksimālais lietotāju skaits ir 5. **NO.** Advarsler. Kun for privat bruk. Maksimalt antall brukere er 5. **PL.** Ostrzeżenia. Wyłącznie do użytku domowego. Maksymalna liczba użytkowników to 5. **PT.** Avisos. Apenas para uso doméstico. O número máximo de utilizadores é 5. **RO.** Avertismente. Numai pentru uz domestic. Numărul maxim de utilizatori este 5. **RU.** Предостережения. Только для домашнего использования. Максимальное количество пользователей - 5. **SK.** Upozornenia. Iba na domáce použitie. Maximálne množstvo osôb je 5. **SL.** Opozorila. Samo za domačo uporabo. Maksimalno število uporabnikov je 5. **SR.** Upozorenja. Samo za kućnu upotrebu. Maksimalan broj korisnika je 5. **SV.** Varningar. Endast för hemmabruk. Det maximala antalet användare är 5. **TR.** Uyarılar. Sadece ev kullanımı için. Maksimum kullanıcı sayısı 5.

0-3 3-10 3h

™ & © 2018 Jungle Gym B.V. Amsterdam, The Netherlands. Copyrighted material. Do not reproduce under penalty of law.

# Content Kit Bridge Module

450_240

| | | | | |
|---|---|---|---|---|
| **1×** 141_091 | **1×** 022_913 | **4×** 022_320 | **1×** 022_392 | **2×** 123_200 |
| **4×** 005_019 | **2×** 008_043 | **1×** 021_107 | **2×** 005_050 | **2×** 005_514 |
| **6×** 022_50x | **1×** 121_215 | **1×** 005_053 | **2×** 121_114 | **38×** 022_911 |
| **1×** 120_490 | **1×** 120_246 | **1×** 100_118 | **2×** 123_206 | |

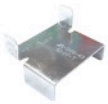

# Hardware Bridge Module

100_118

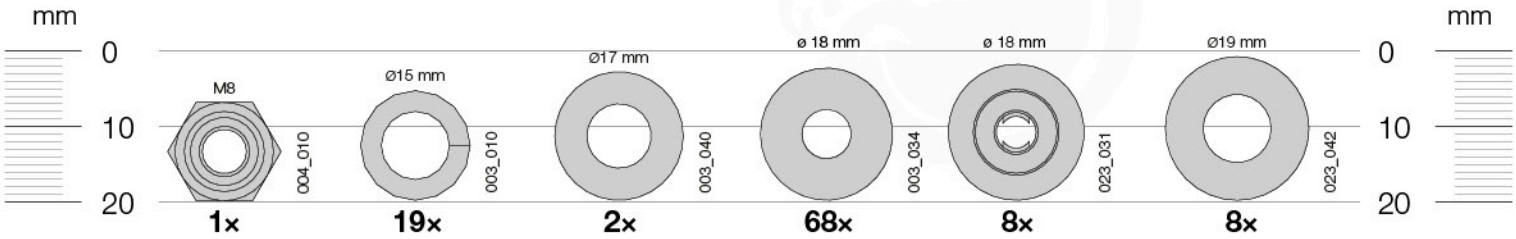




www.junglegym.com - © 2018 Jungle Gym B.V.

# Hardware Bridge Module

100_118

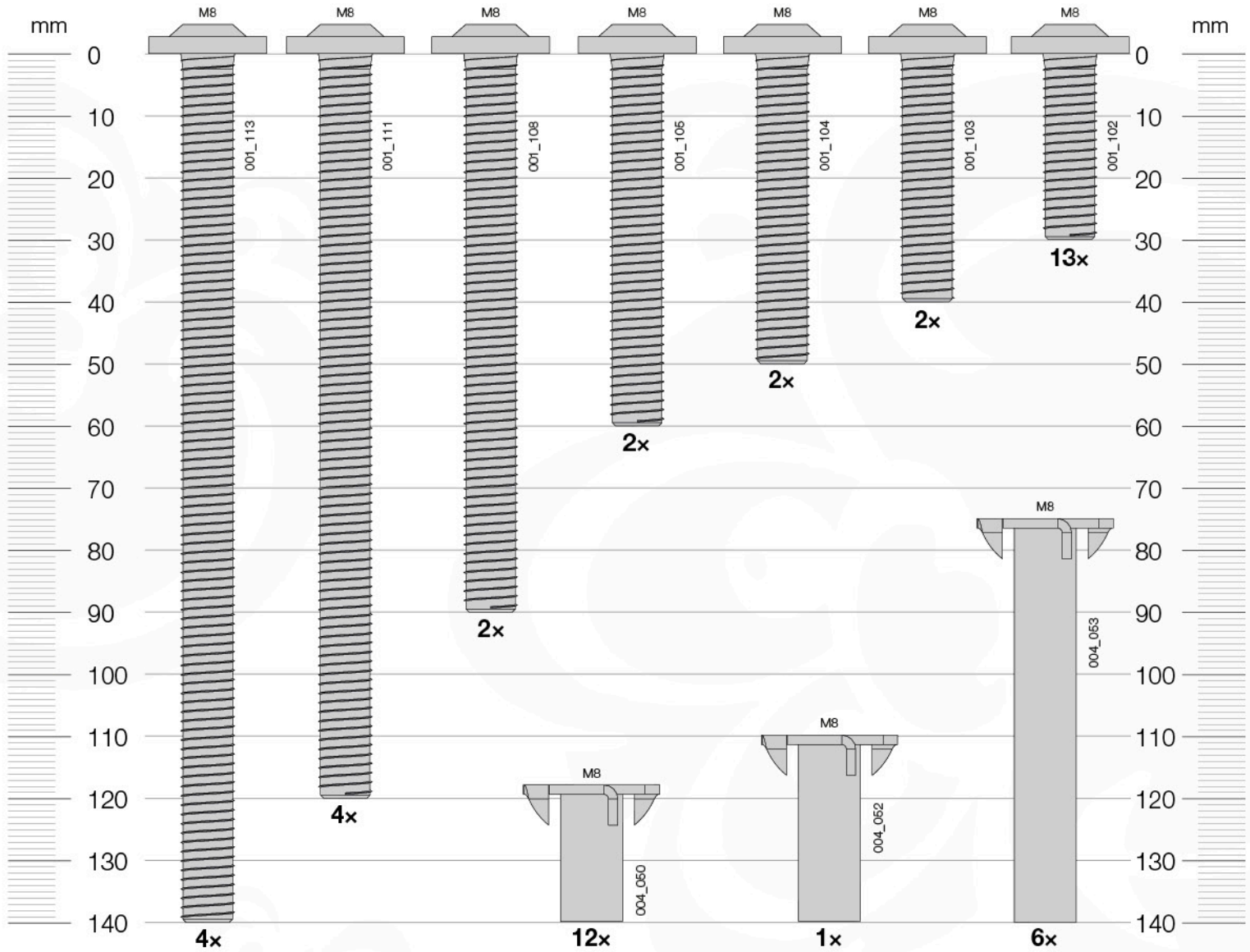


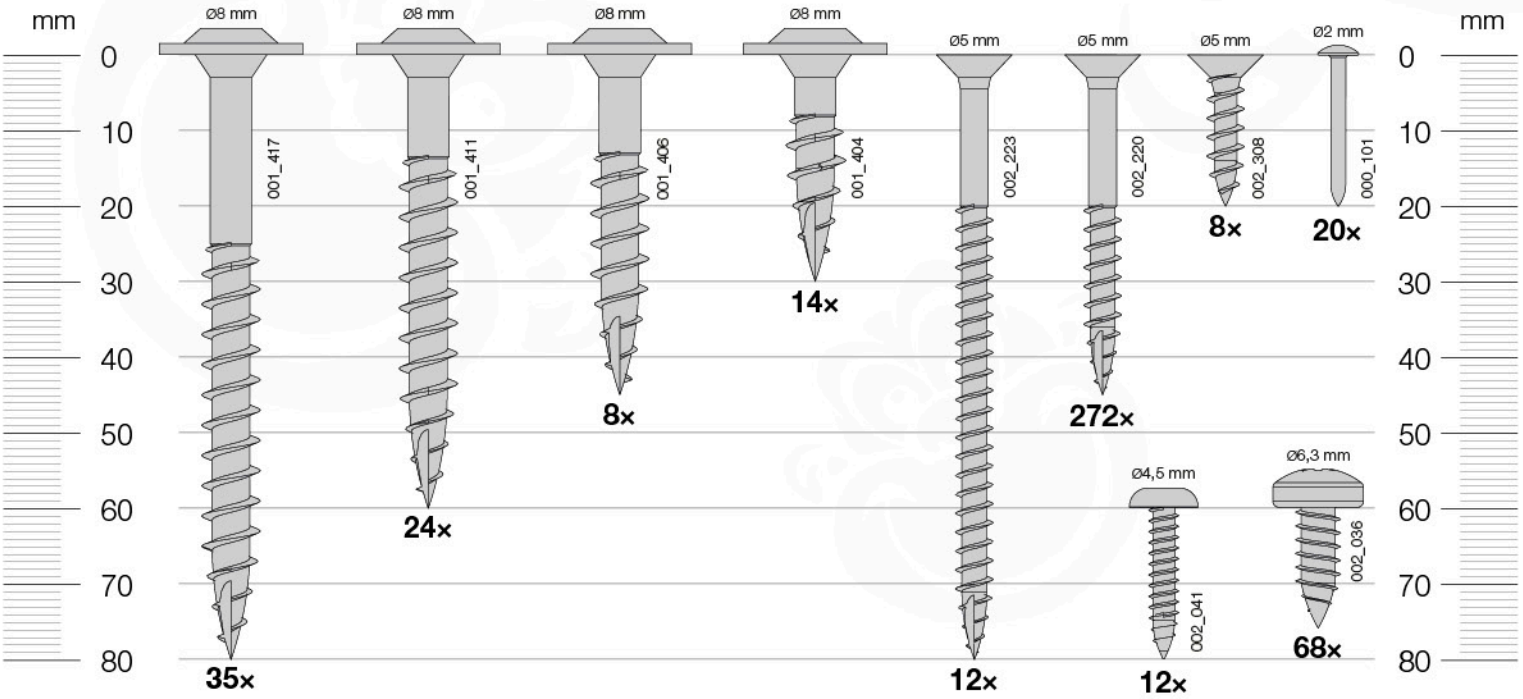


© 2018 Jungle Gym B.V. - www.junglegym.com

# Timber Bridge Module

650_240

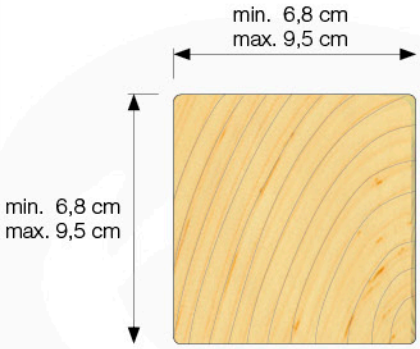


| | | |
|---|---|---|
| min. 209 cm max. 210 cm — 210 | | 4× |

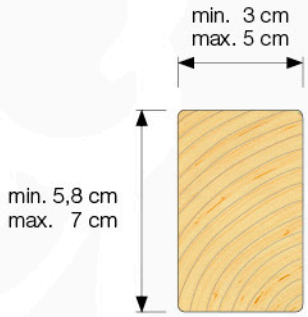


| | | |
|---|---|---|
| min. 179 cm max. 180 cm — 180 | | 4× |
| min. 169 cm max. 170 cm — 170 | | 2× |
| min. 64 cm max. 150 cm — 150 | 2a | 1× |
| min. 129 cm max. 130 cm — 130 | | 2× |
| min. 64 cm max. 95 cm — 95 | 2a | 1× |
| min. 79 cm max. 80 cm — 80 | | 5× |
| min. 55 cm max. 64 cm — 64 | p.11 | 2× |
| min. 24 cm max. 58 cm — 58 | 2a | 2× |
| min. 33 cm max. 34 cm — 34 | | 4× |


www.junglegym.com - © 2018 Jungle Gym B.V.

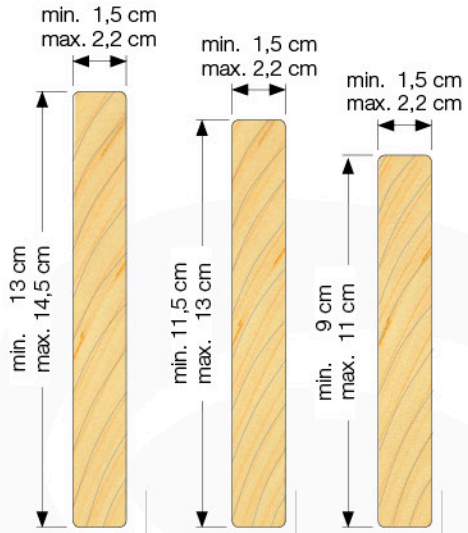


| | | | | |
|---|---|---|---|---|
| min. 114 cm max. 115 cm (115) | 2a | 1× | 1× | 1× |
| min. 80 cm max. 95 cm (95) | 2a | 1× | 1× | 2× |
| min. 85 cm max. 86 cm (86) | | 14× | 16× | 19× |
| min. 79 cm max. 80 cm (80) | | 13× | 14× | 15× |
| min. 61 cm max. 67 cm (67) | p.16+18 | 24× | 28× | 34× |
| min. 59 cm max. 60 cm (60) | | 4× | 4× | 5× |

© 2018 Jungle Gym B.V. - www.junglegym.com

## 1a

1x
022_913

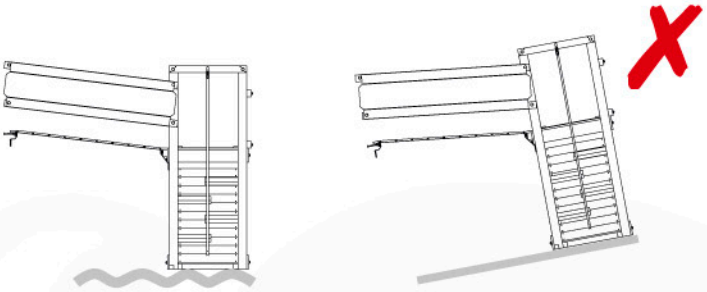

## 1b

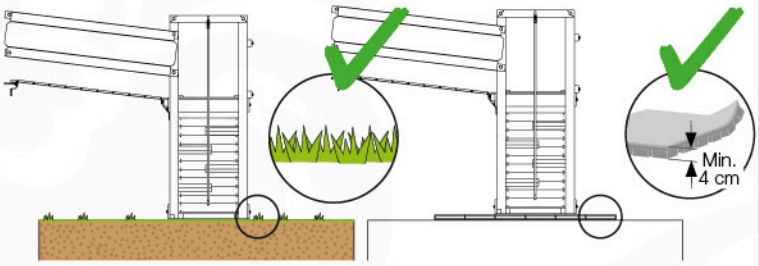


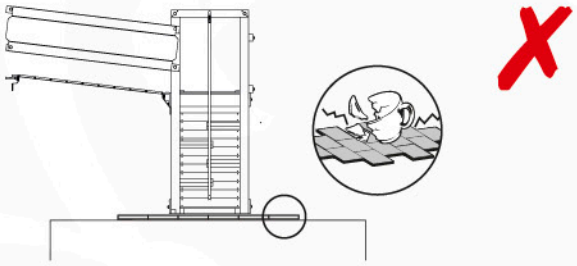

## 1c

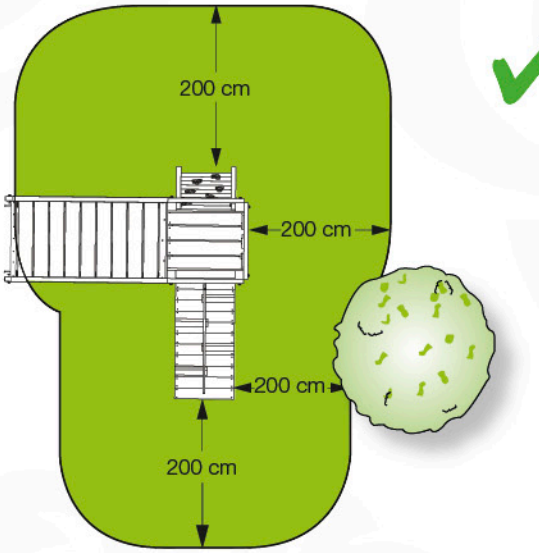


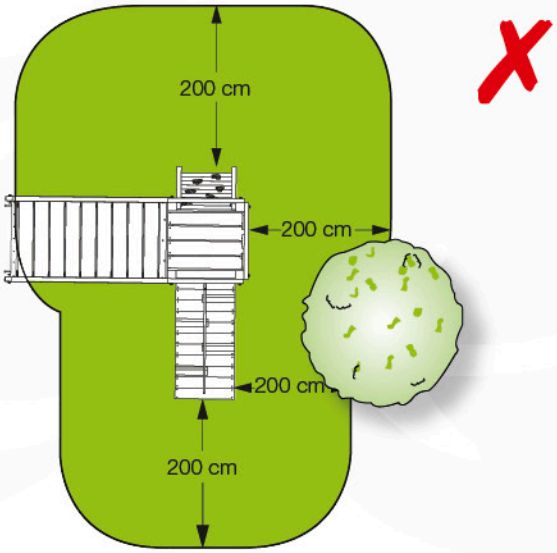


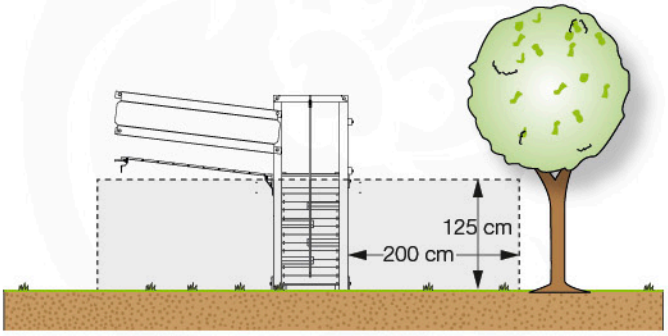


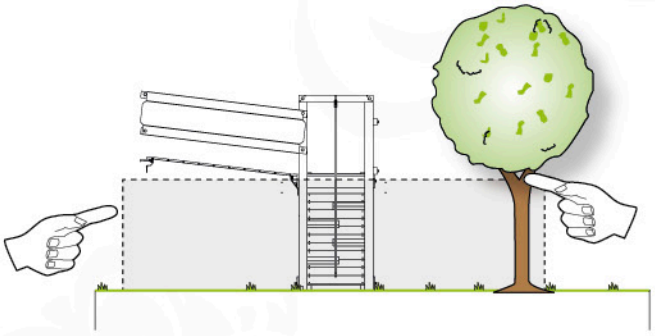

## 1d

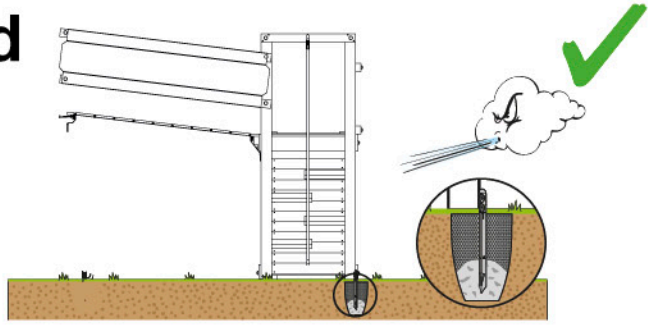

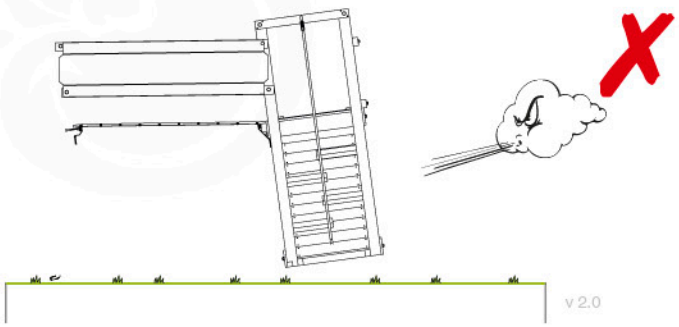

v 2.0



www.junglegym.com - © 2018 Jungle Gym B.V.

# 2 Playground Planner Bridge Module

| | | | | | | |
|---|---|---|---|---|---|---|
| Jungle Palace | Jungle Barn | Jungle Farm | Jungle Mansion | Jungle Fort | Jungle Chalet | |
| Jungle Villa | Jungle Lodge | Jungle Cabin | Jungle Shelter | Jungle Cubby | Jungle Cottage | Jungle House | Jungle Hut |
| Jungle Home | Jungle Casa | Jungle Club | Jungle Castle | Jungle Tower | Playhouse L | Playhouse XL | Playhouse CXL |

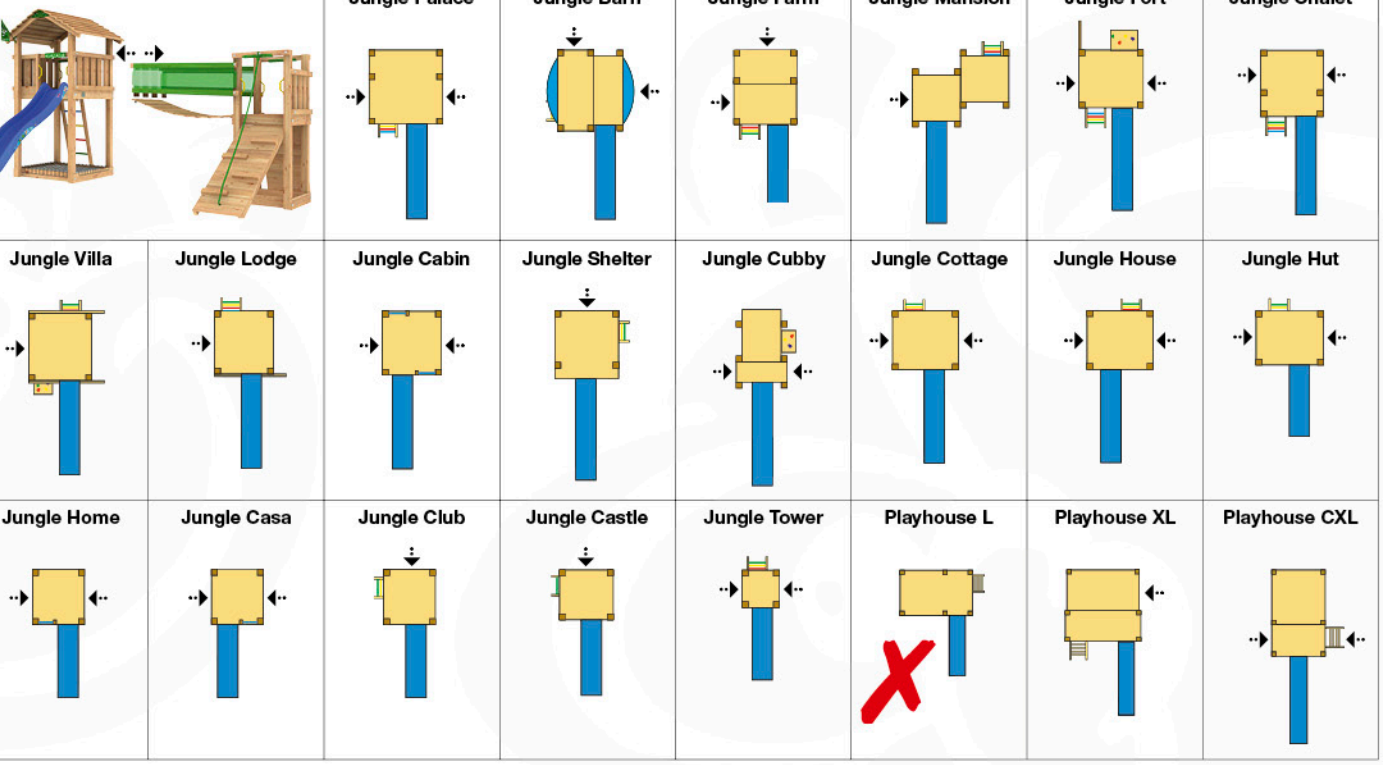

# 3

1×
022_392

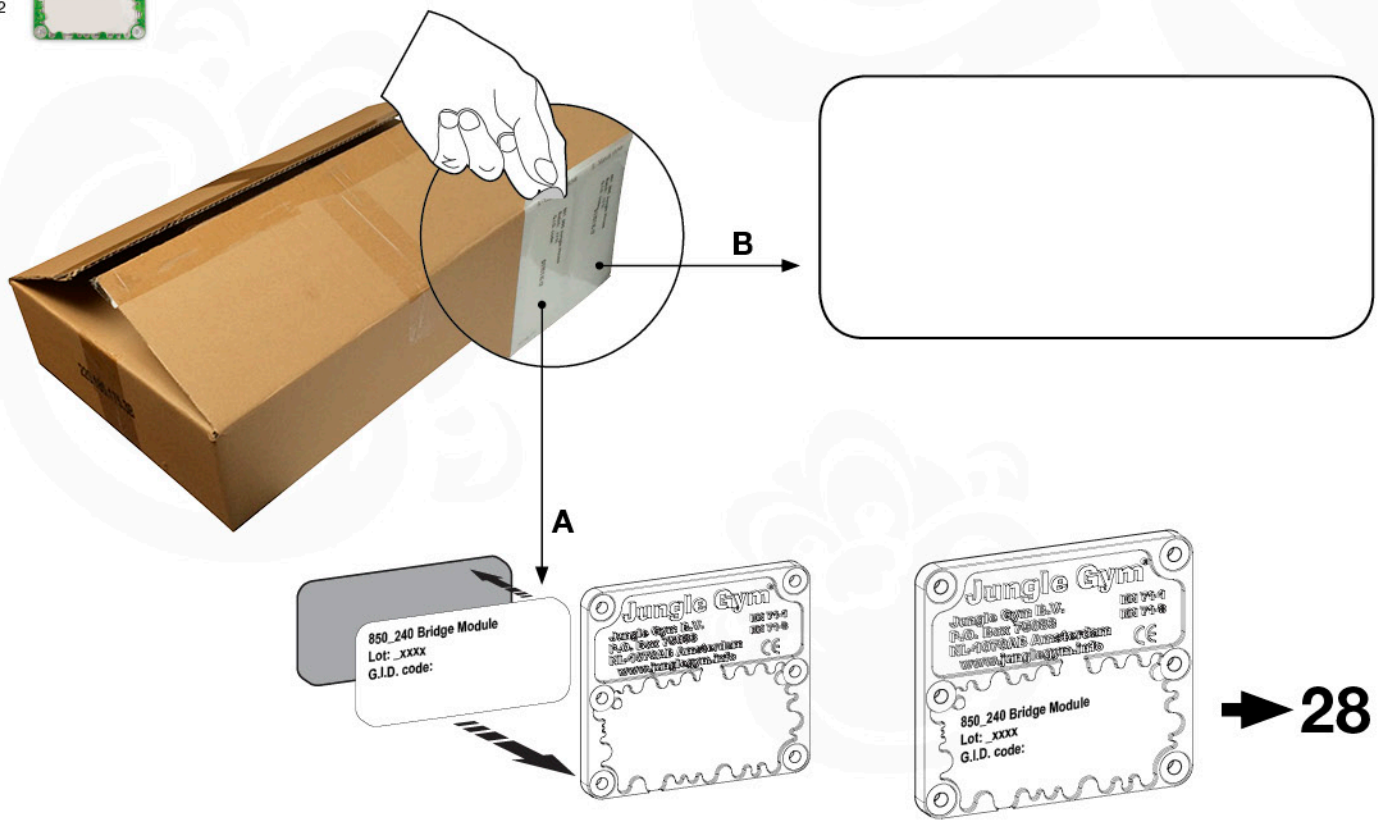


→ 28

# 4a

**16x** 45 mm
002_220

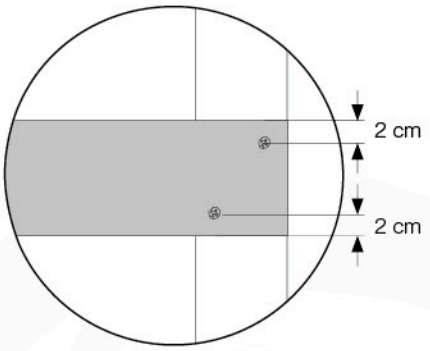


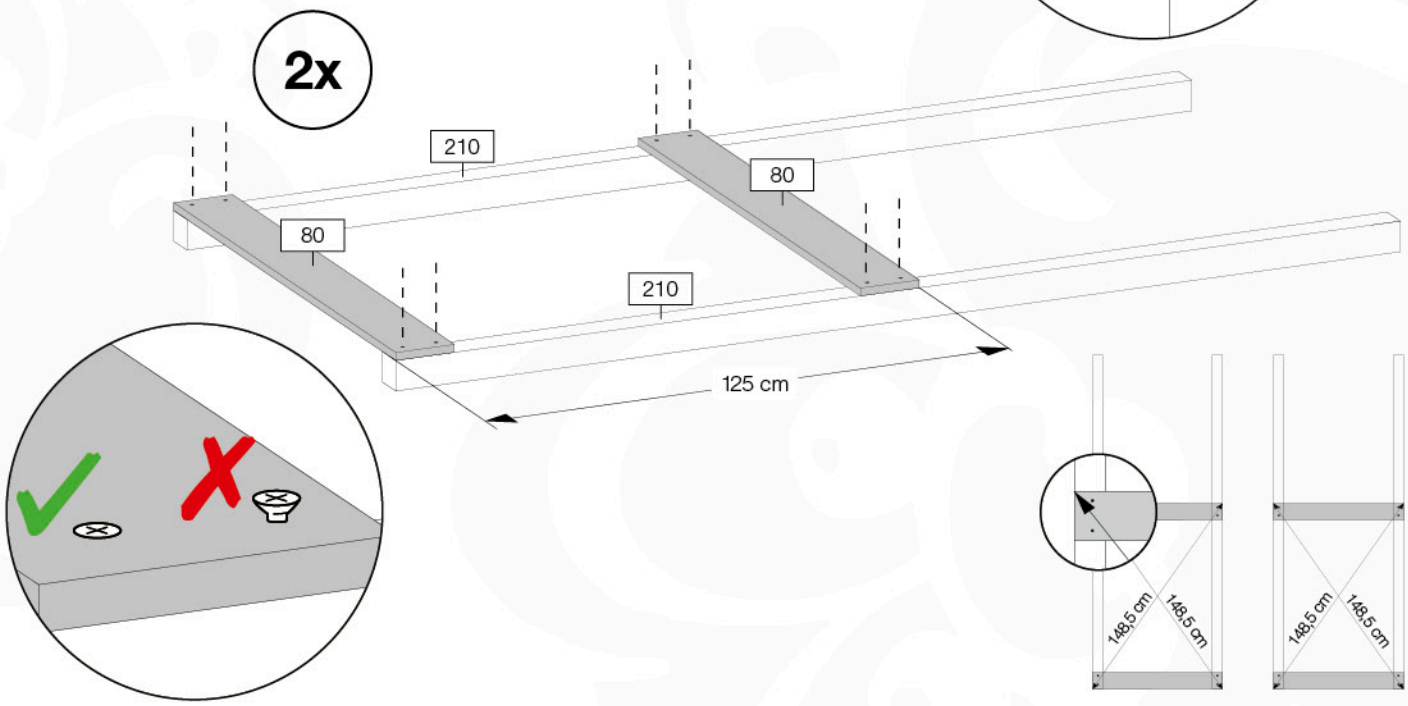


# 4b

**8x** 45 mm
002_220

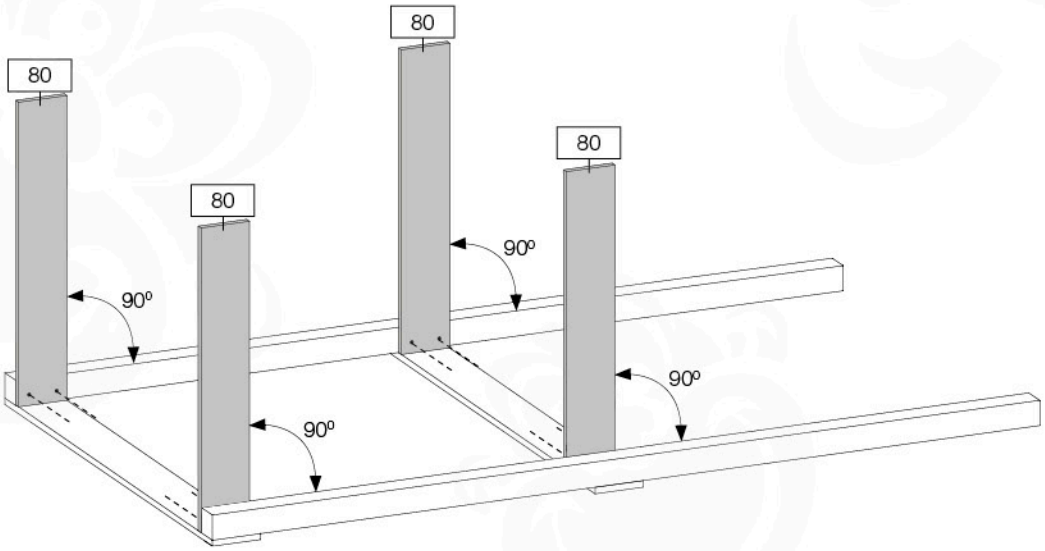



www.junglegym.com - © 2018 Jungle Gym B.V.

# 5a

8x 45 mm
002_220

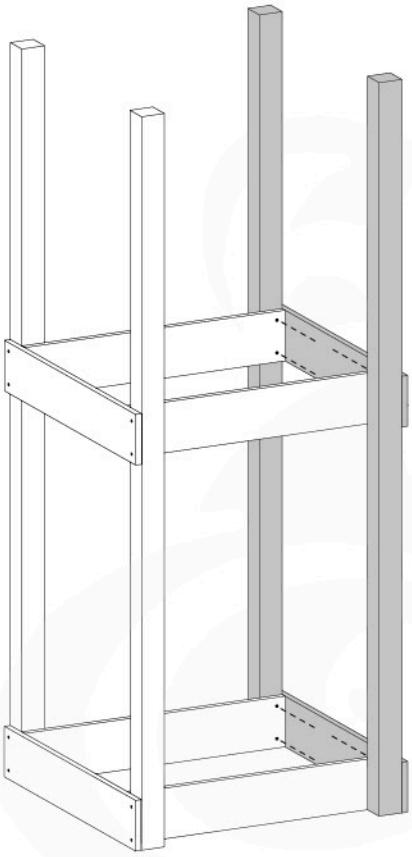

# 5b

8x 80 mm
002_223

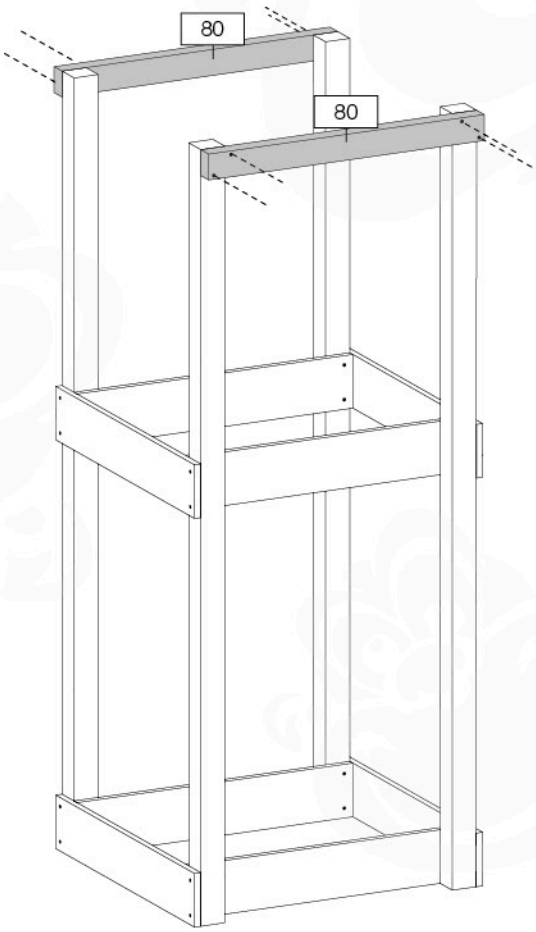


© 2018 Jungle Gym B.V. - www.junglegym.com

# 6a

**12×**
001_411

**1×**
022_913

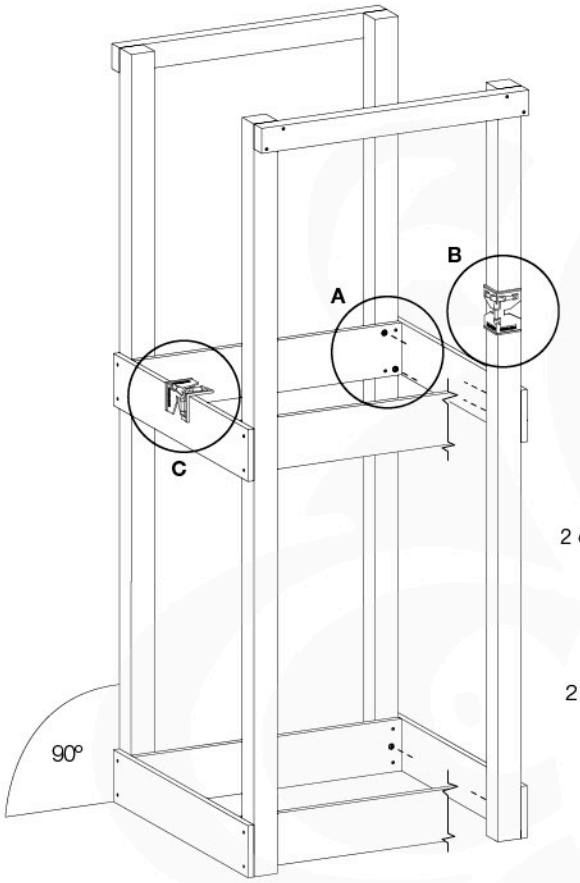


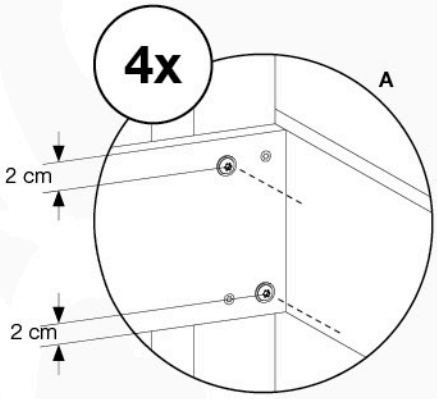


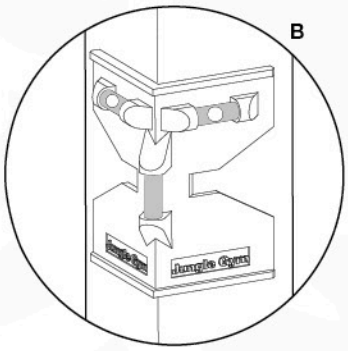


# 6b

**4×**
001_417
120_005

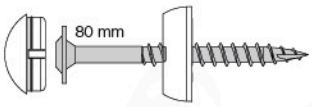





**6×**
001_411
120_005

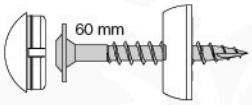

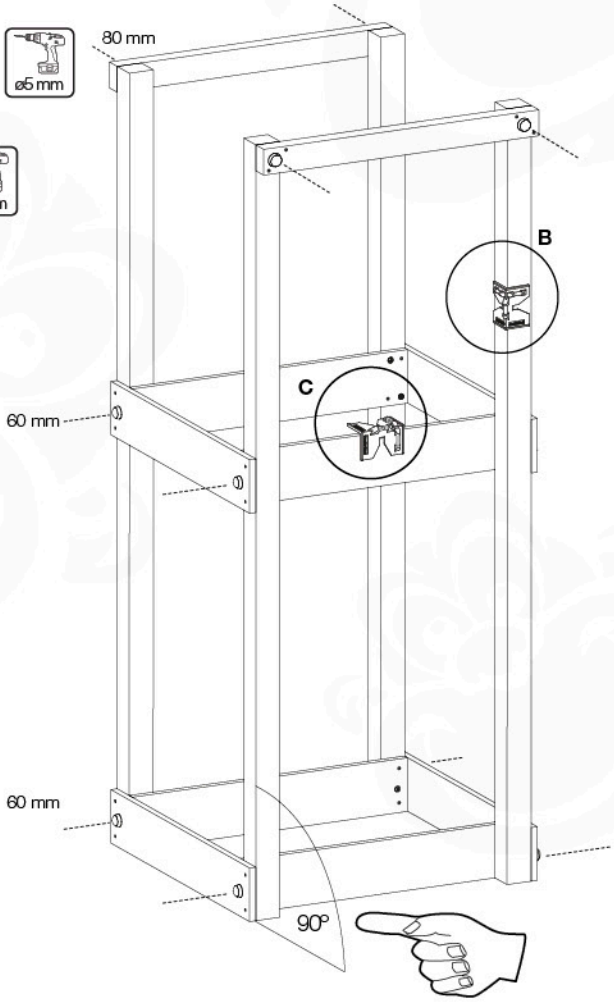


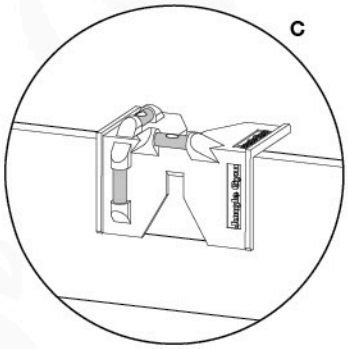

# 7a

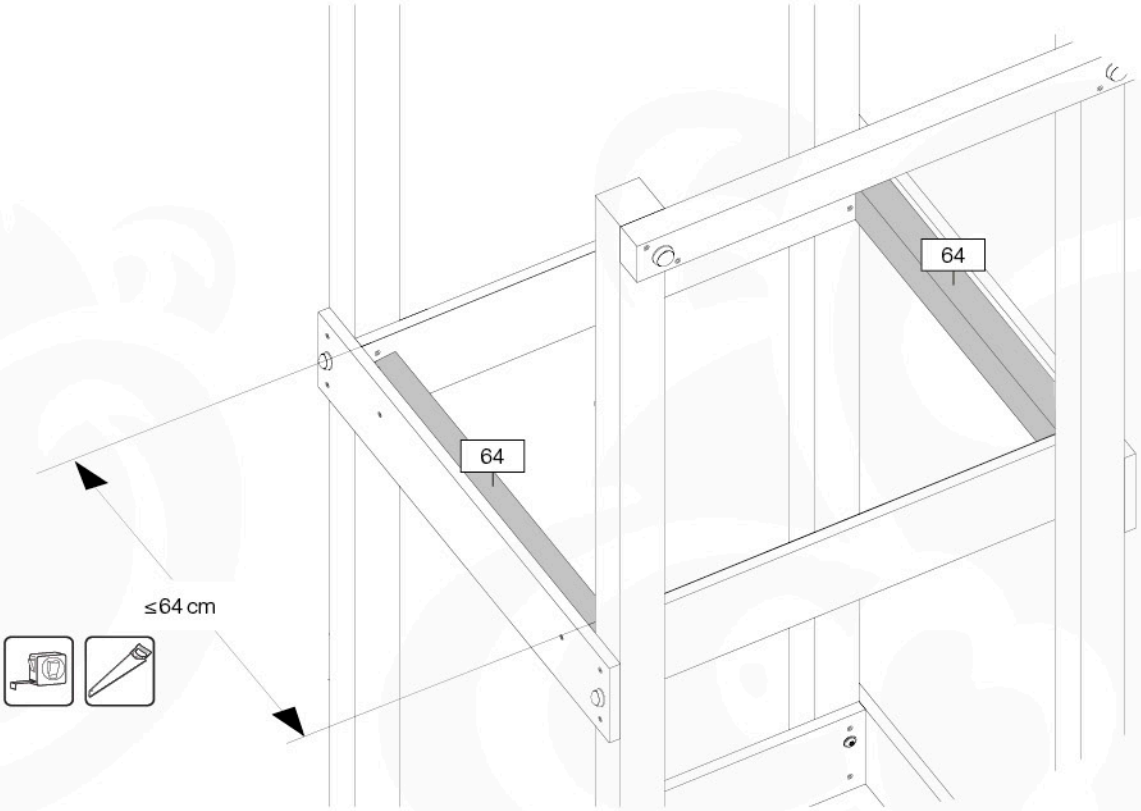


# 7b

4x
002_220

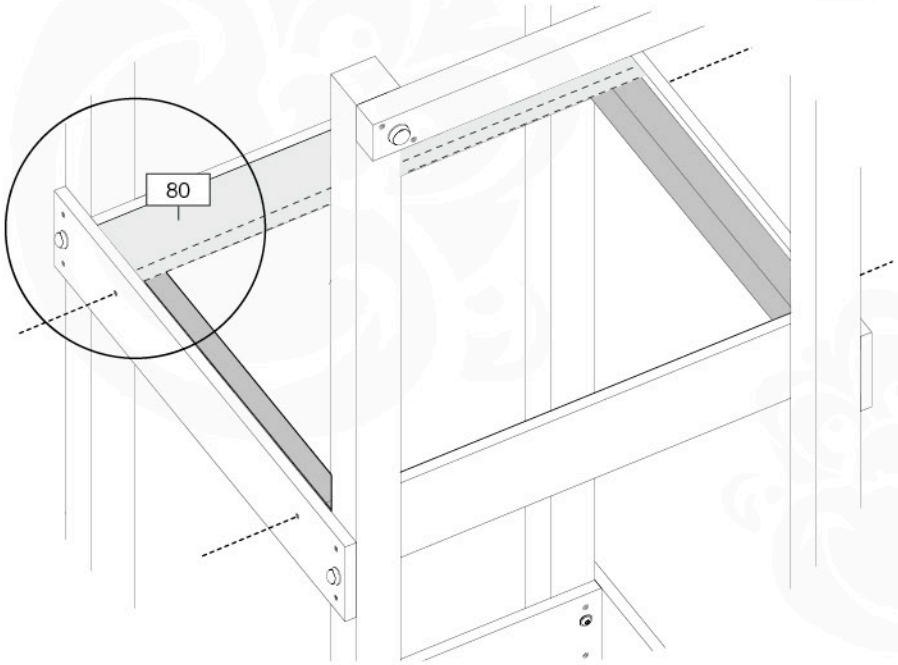


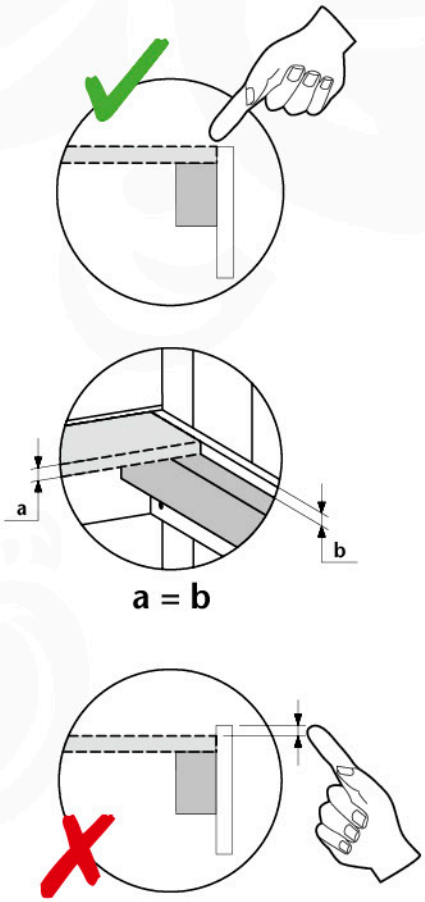

# 7c

**4x** 001_406

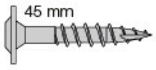

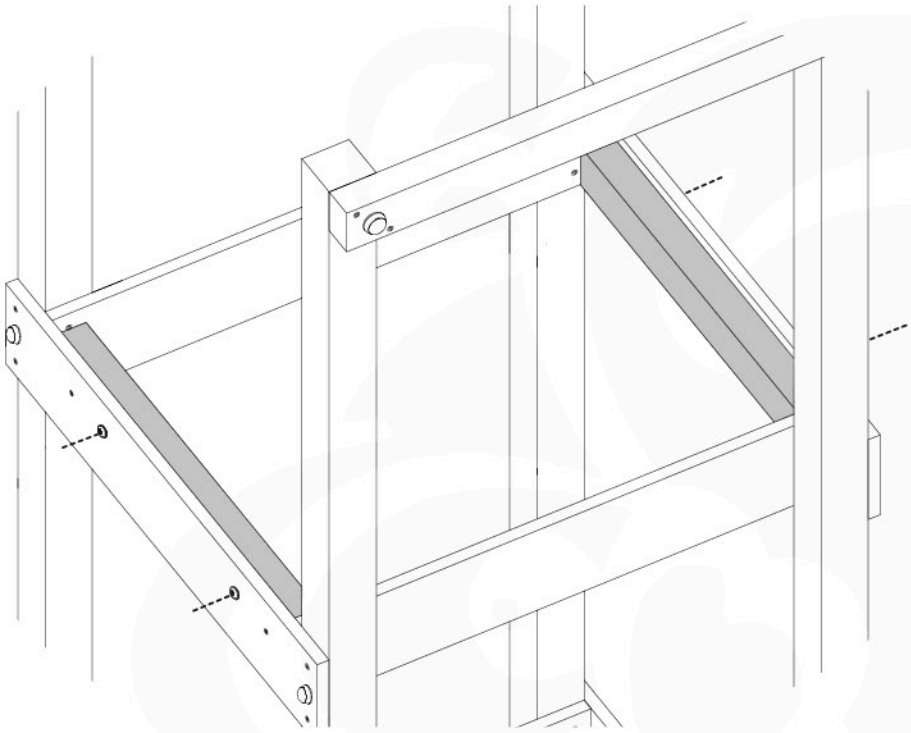

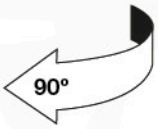


# 8a

**8x** 002_220

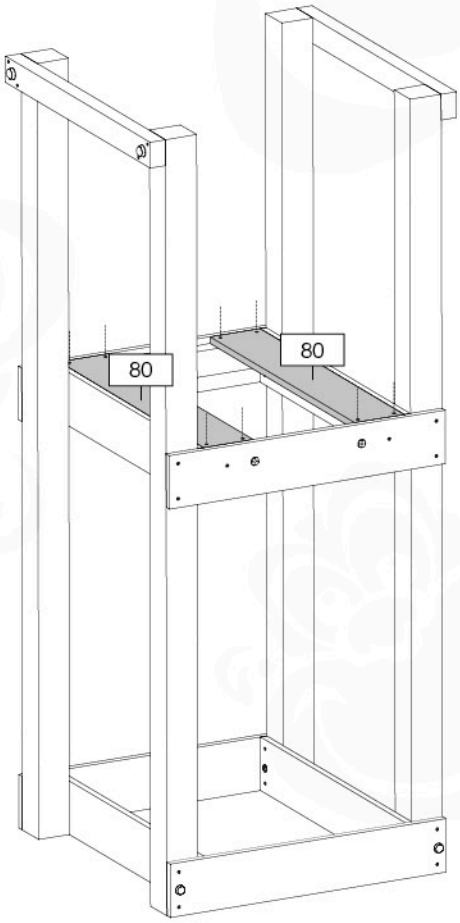




www.junglegym.com - © 2018 Jungle Gym B.V.

# 8b

**0 - 12x**
002_220

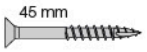


**2x**
008_043

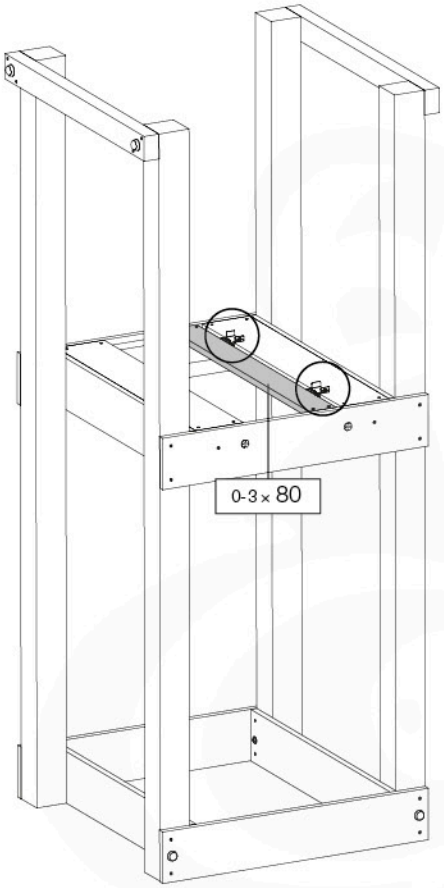


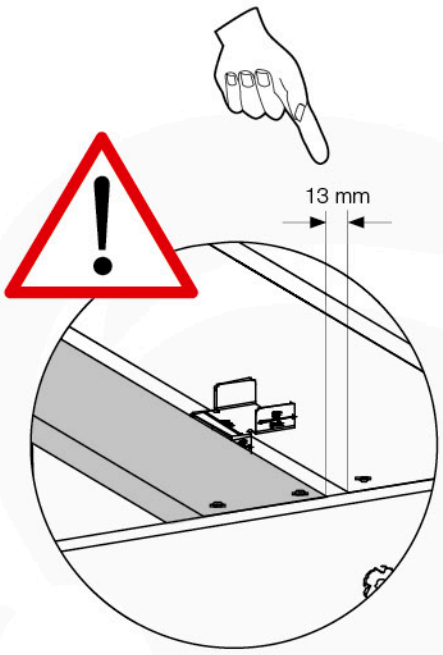


# 8c

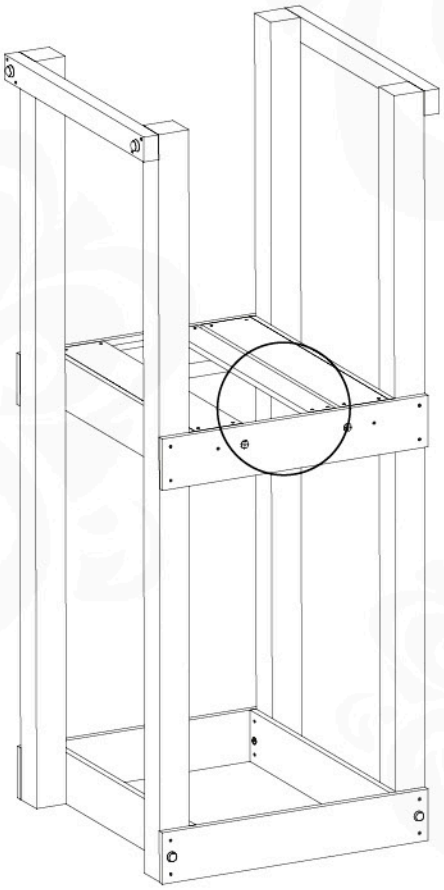

$$\frac{\text{- 4 cm}}{2} = \mathbf{a}$$

**2x**

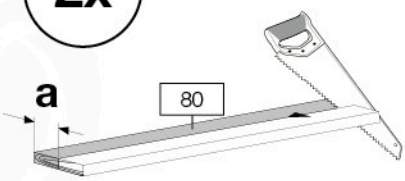

# 8d

**8x** 002_220

**2x** 008_043

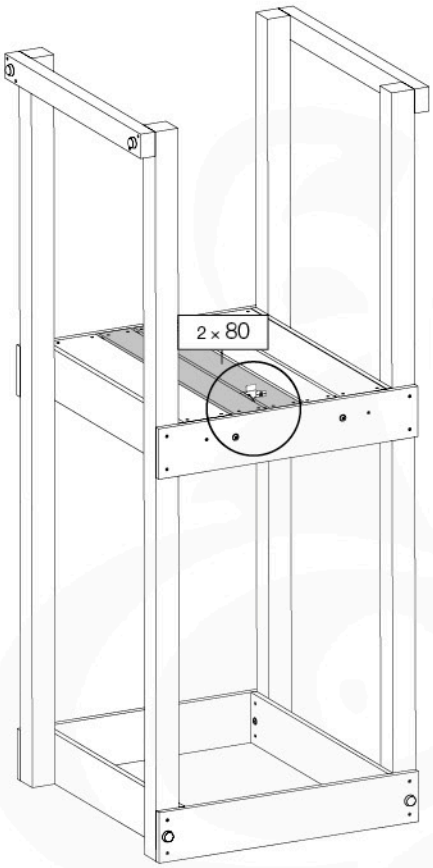


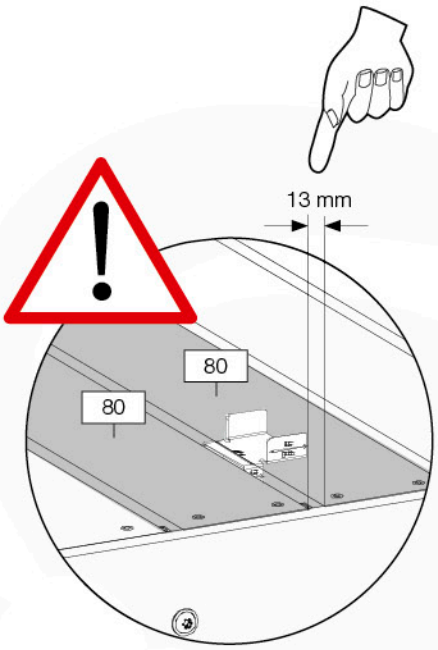


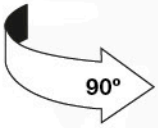


# 9

**4x** 001_417 120_005

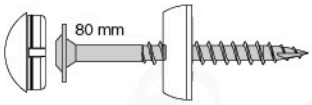

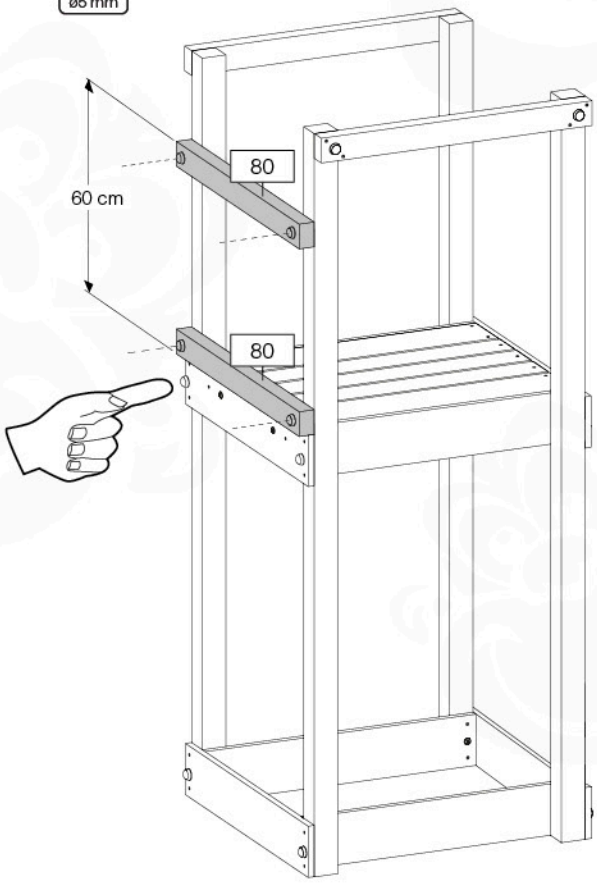




www.junglegym.com - © 2018 Jungle Gym B.V.

# 10

**12 - 20x** 002_220

**2x** 008_043

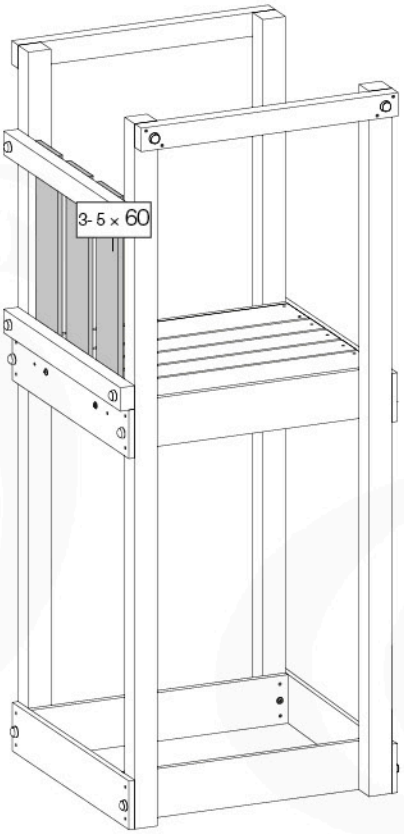


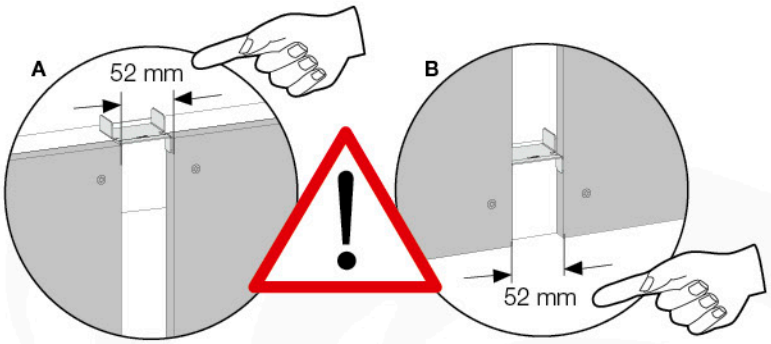


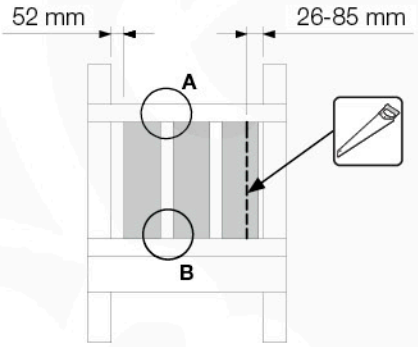


# 11a

**2x** 002_223

**2x** 001_411 120_005

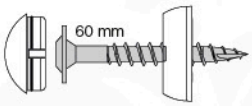

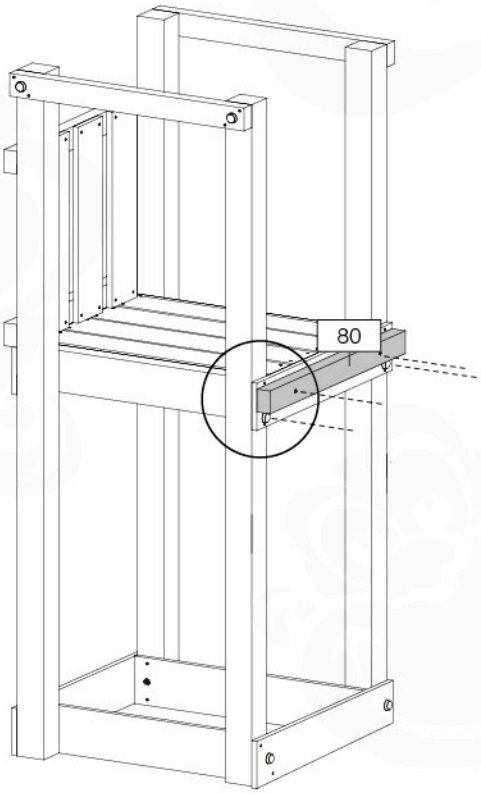


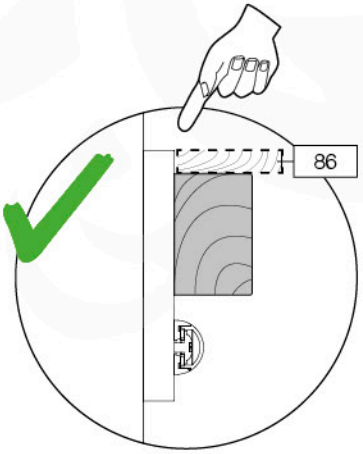


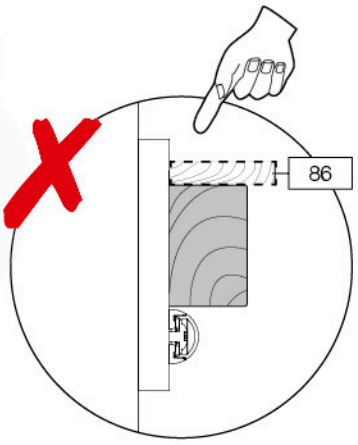

# 11b

**2x**
001_111
001_113
003_010
004_053

**2x**
001_417
023_042

**2x**
005_019

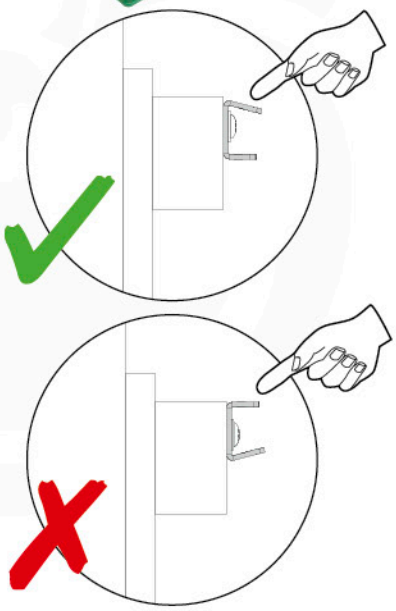

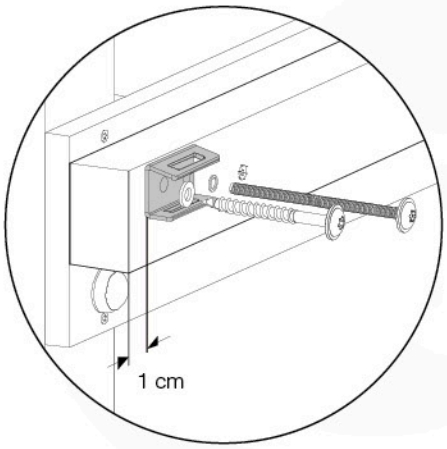


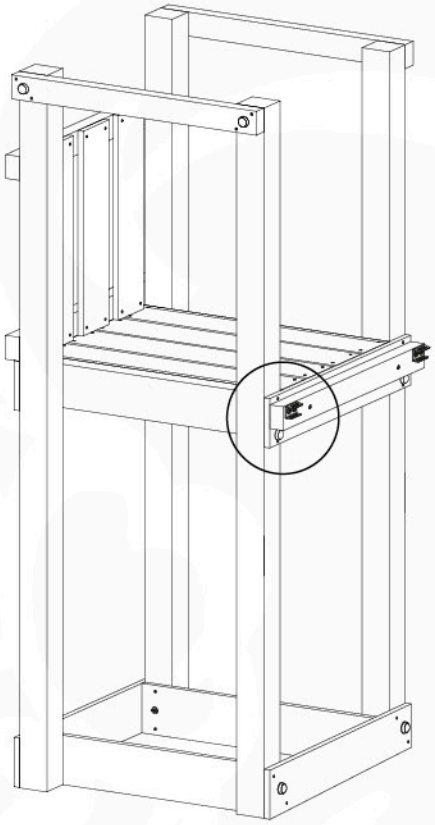

# 12a

**36 - 60x**
002_220

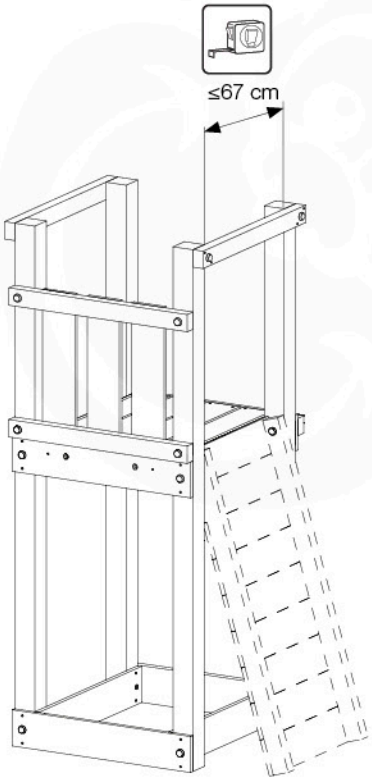


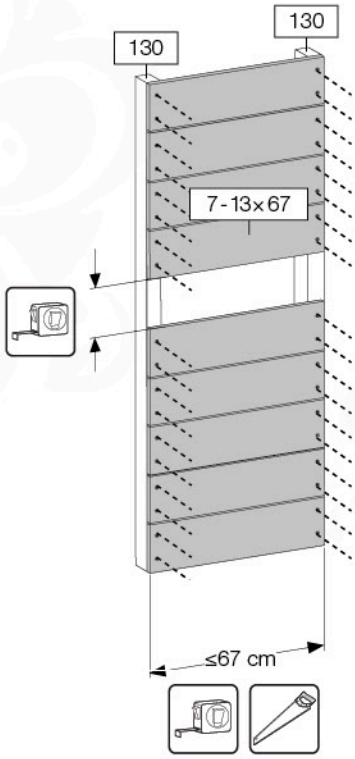


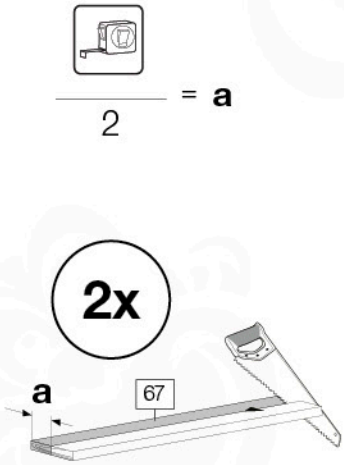


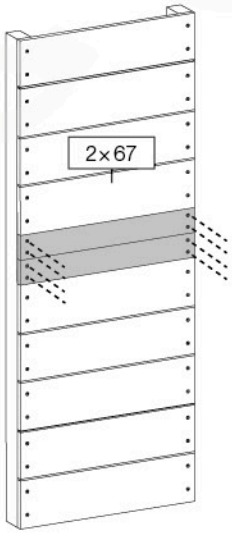



www.junglegym.com - © 2018 Jungle Gym B.V.

# 12b

**2x**
001_417
120_005

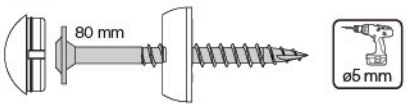


**2x**
001_404
023_042

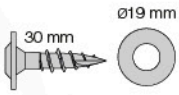


**1x**
005_514

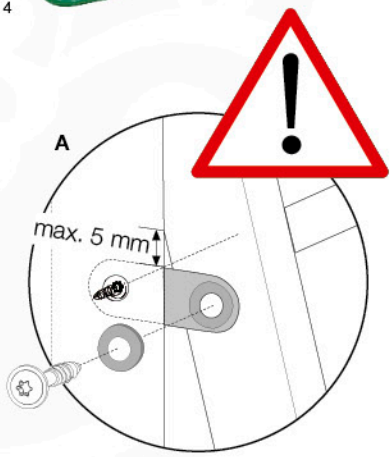


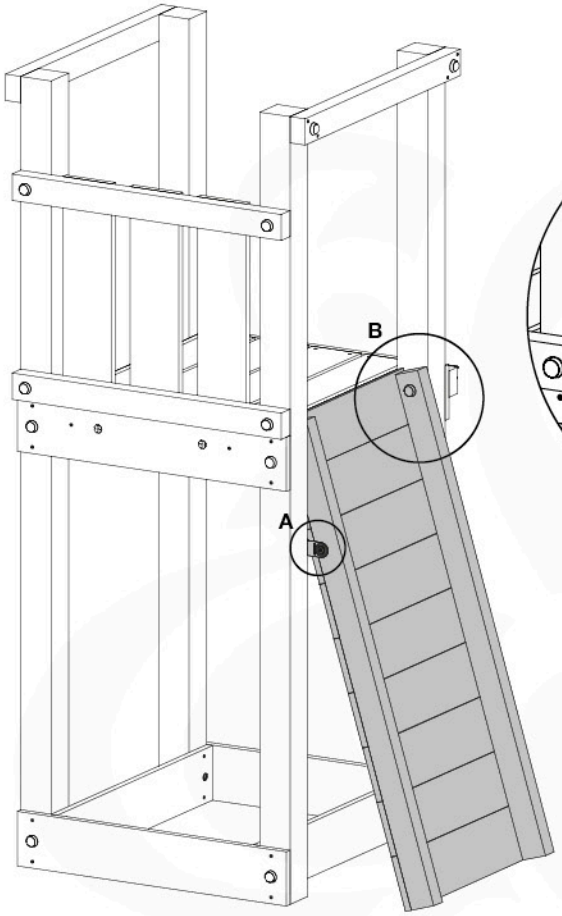


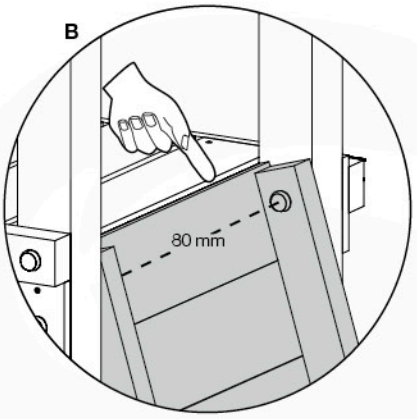


# 13

**12x**
001_102
003_010
004_050

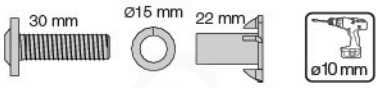


**6x**
022_50x

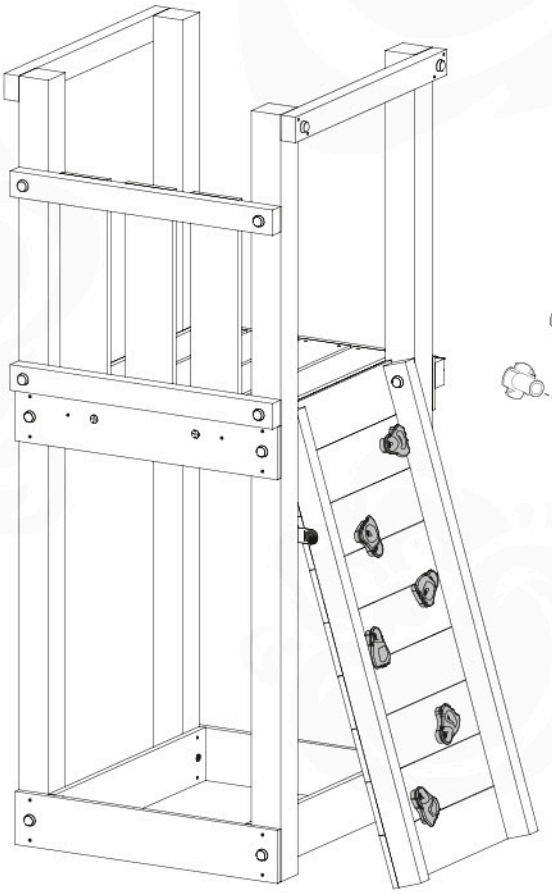

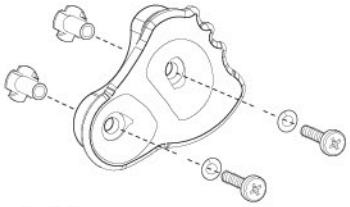

# 14a

**48 - 76×** 45 mm
002_220

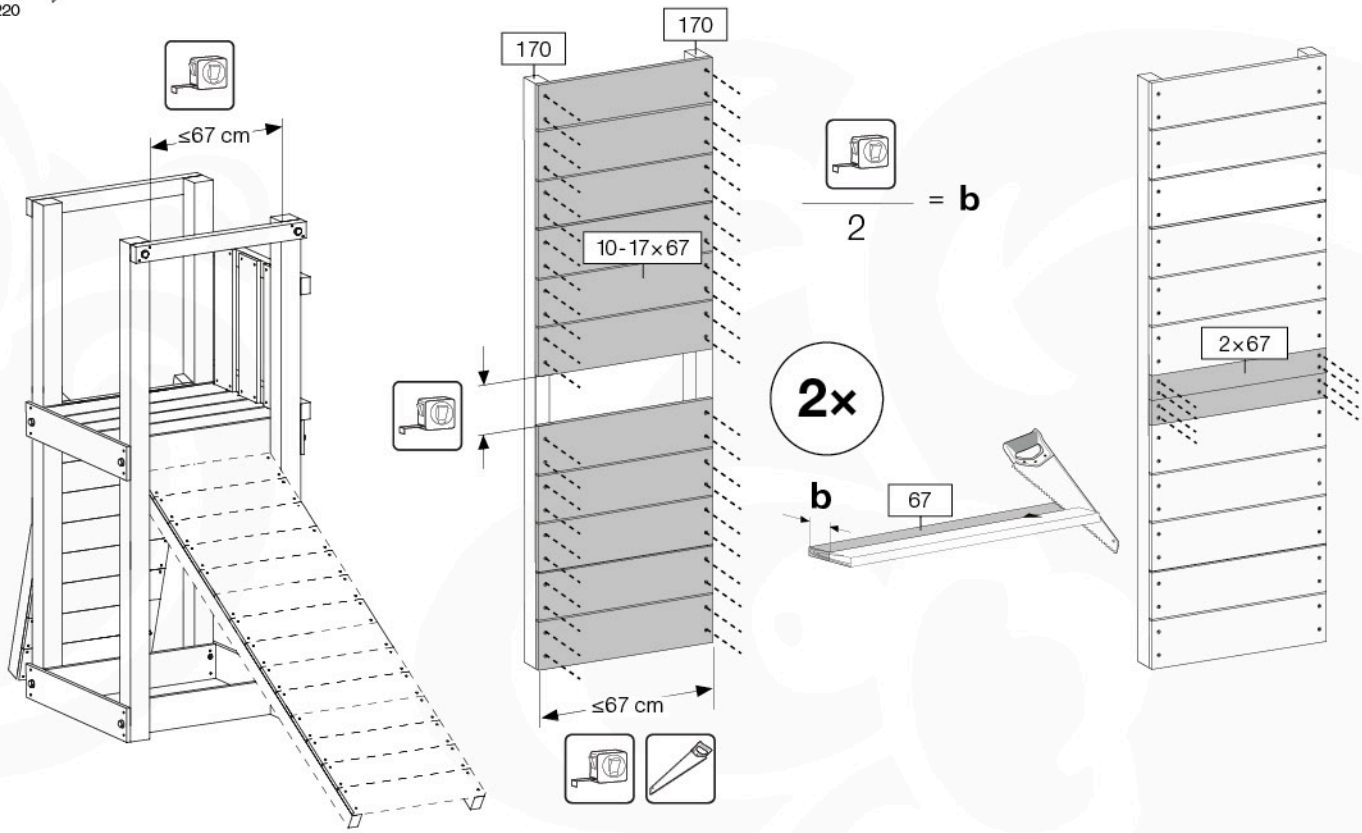


# 14b

**12×** 45 mm
002_220

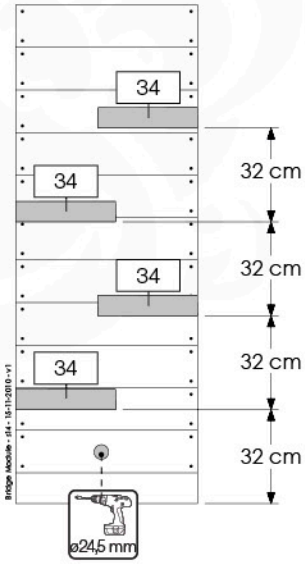

# 14c

**2x**
001_417

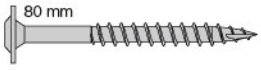

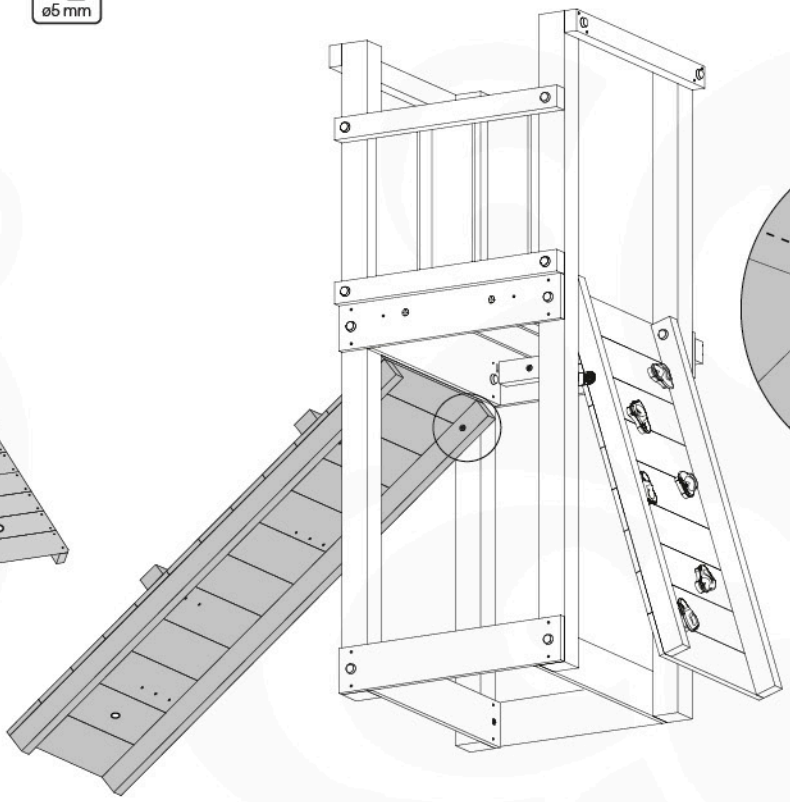

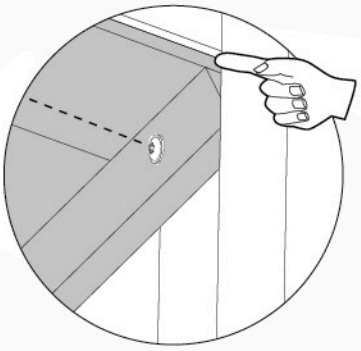

# 14d

**2x**
001_404
023_042

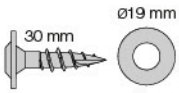

**1x**
005_514

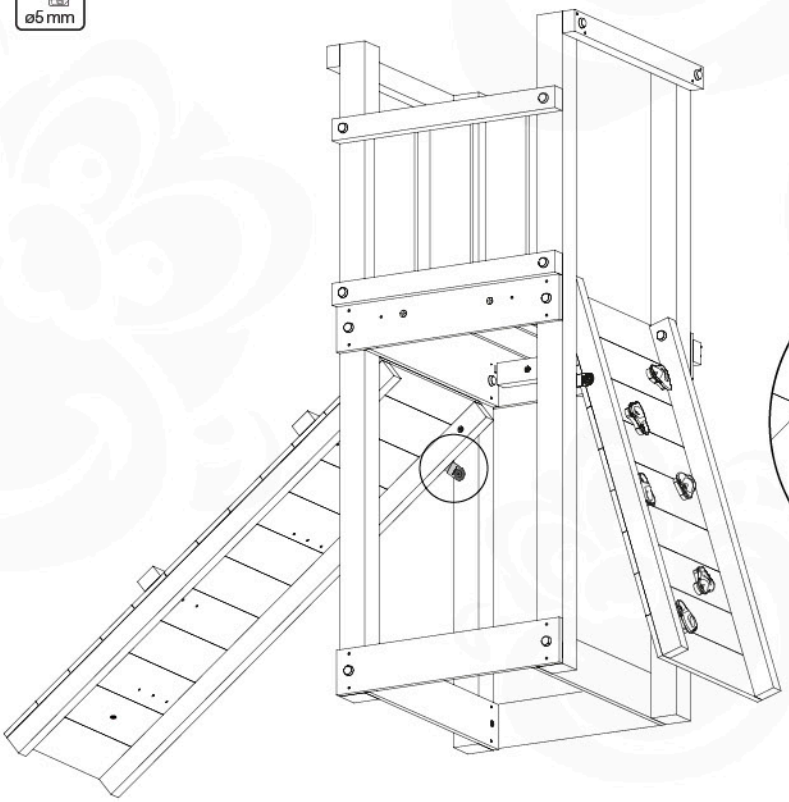

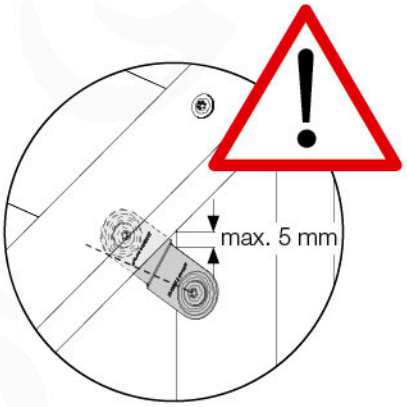

# 15a

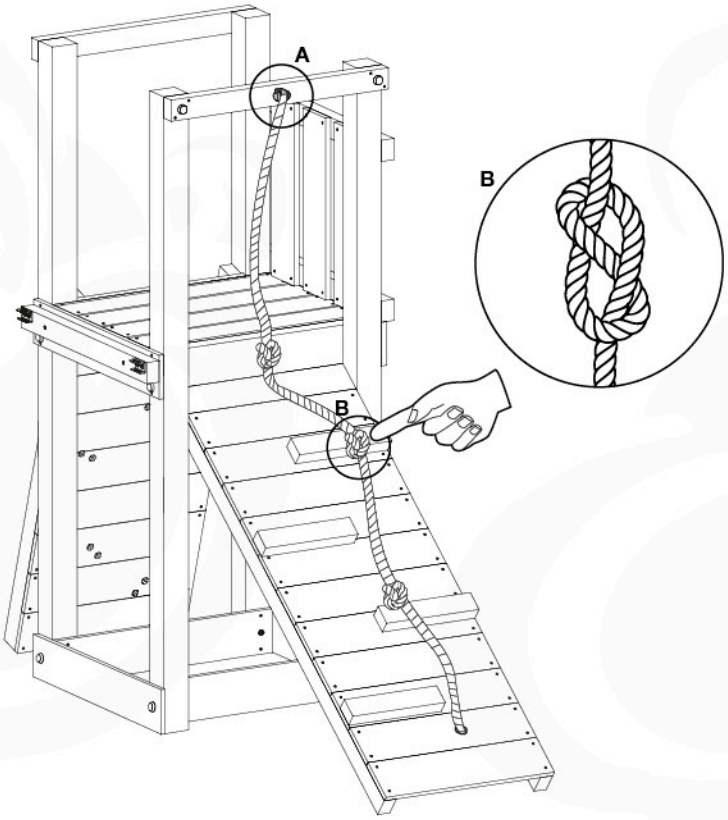


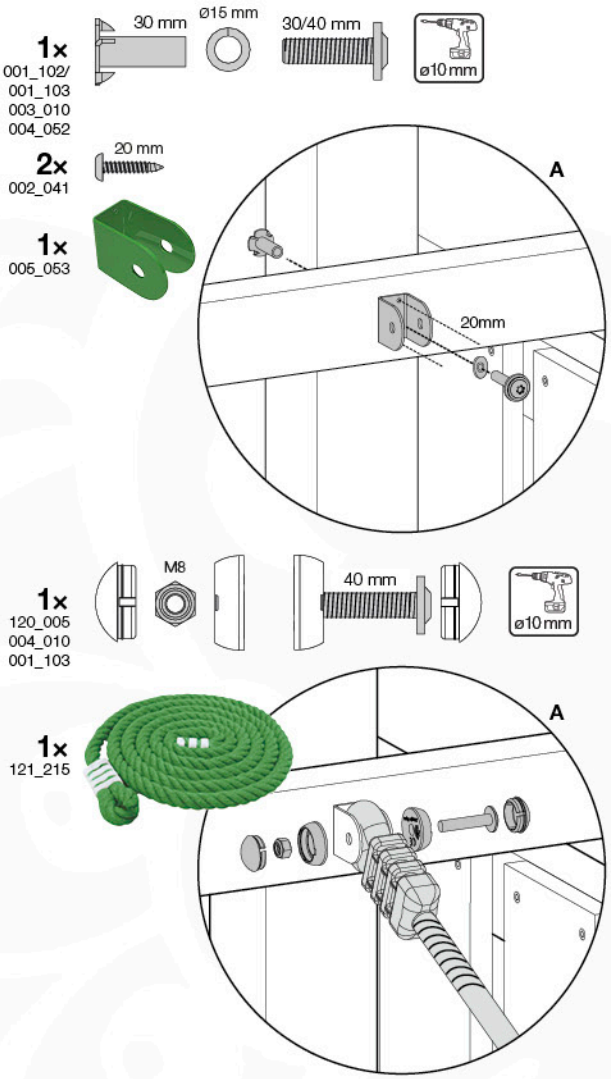


# 15b

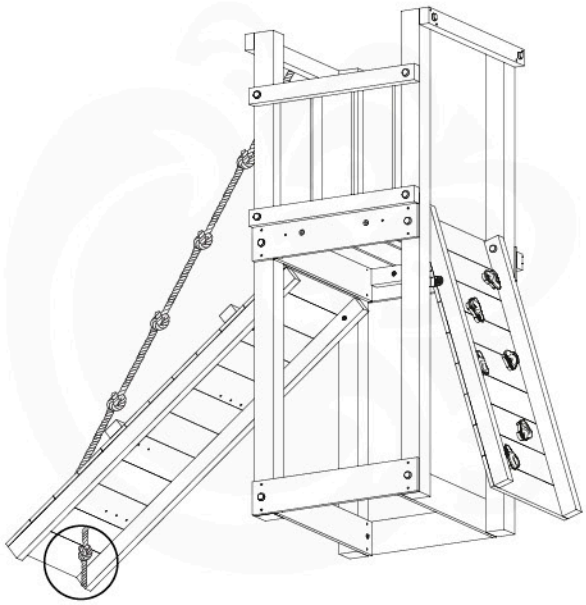

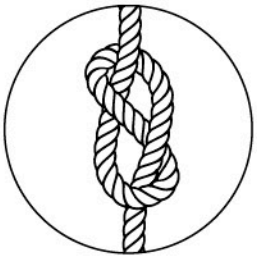

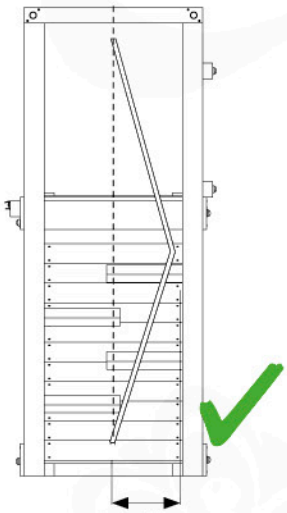

min. 0 cm
max. 23 cm

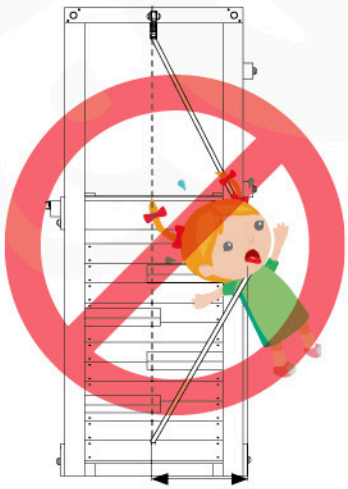

> 23 cm

# 16

2x
123_206

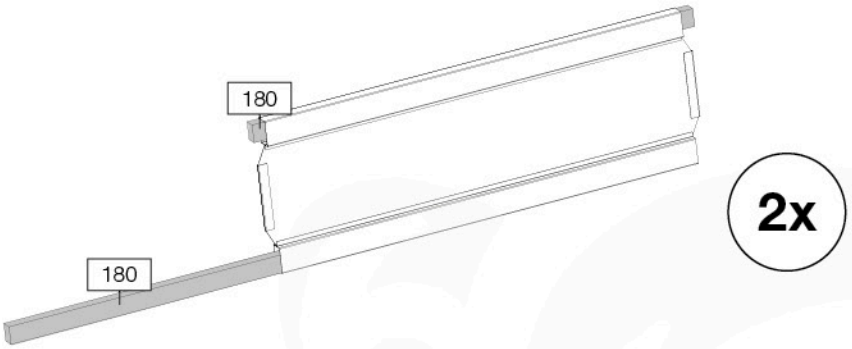


# 17a

4x
001_417
120_005

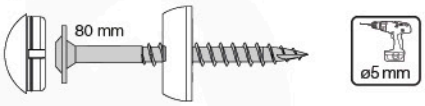


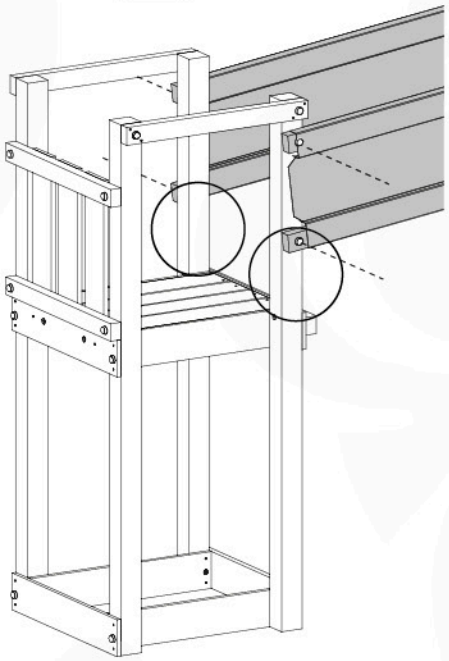

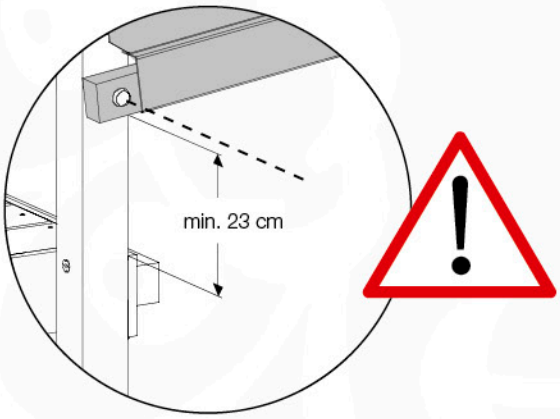


# 17b

| | | | | | |
|---|---|---|---|---|---|
| Jungle Barn 2 | Jungle Shelter | Jungle Palace | Jungle Barn 1 | Crazy Playhouse CXL | Jungle Cubby |
| Jungle Farm 2 | Jungle Cottage | Jungle Farm 1 | Jungle Tower | | |
| Jungle Mansion | Jungle House | Jungle Chalet | | | |
| Jungle Fort | Jungle Hut | Jungle Club | | | |
| Jungle Villa | Jungle Home | Jungle Castle | | | |
| Jungle Lodge | Jungle Casa | | | | |
| Jungle Cabin | Jungle Playhouse XL | | | | |

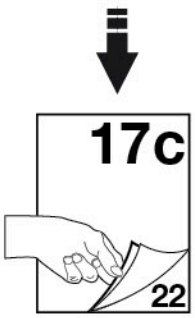


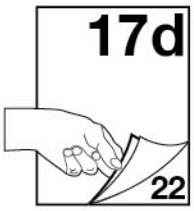


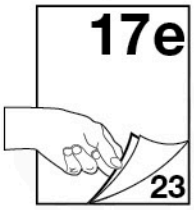

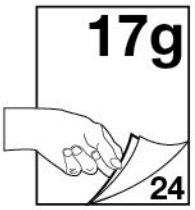


© 2018 Jungle Gym B.V. - www.junglegym.com

# 17c

**2x**
001_417
120_005

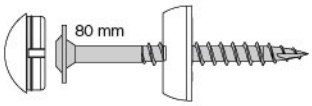


**2x**
001_417/
001_411
120_005

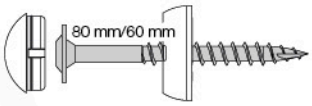


**4x**
002_308
023_031

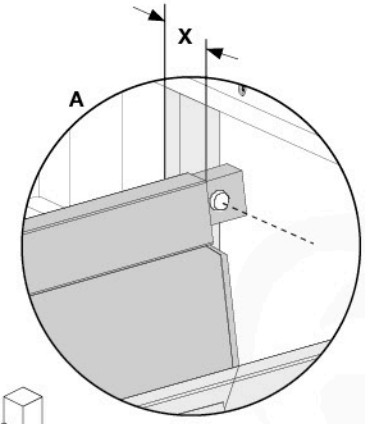


X = ≤ 8 cm

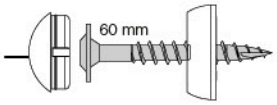


X = > 8 cm

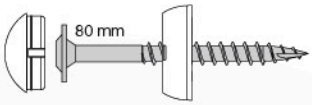


- Jungle Barn 2
- Jungle Farm 2
- Jungle Mansion
- Jungle Fort
- Jungle Villa
- Jungle Lodge
- Jungle Cabin
- Jungle Shelter
- Jungle Cottage
- Jungle House
- Jungle Hut
- Jungle Home
- Jungle Casa
- Jungle Playhouse XL

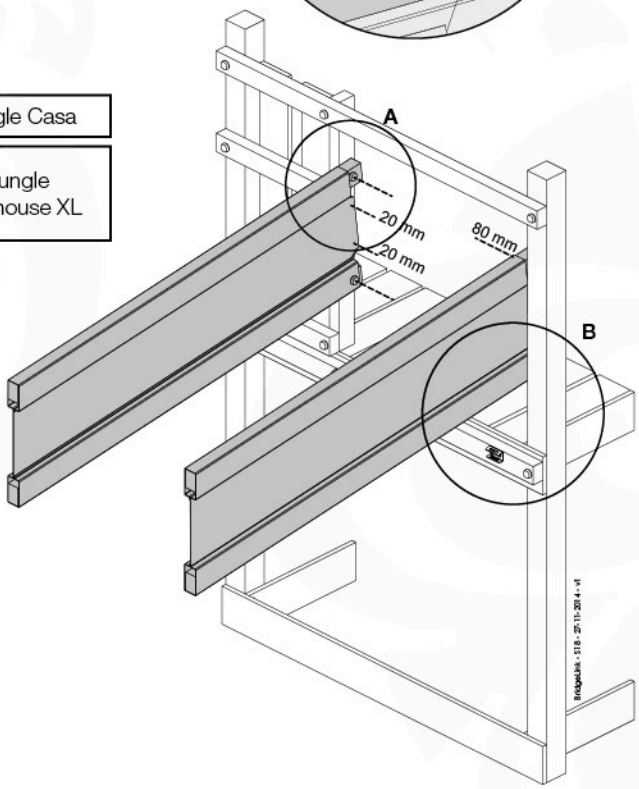


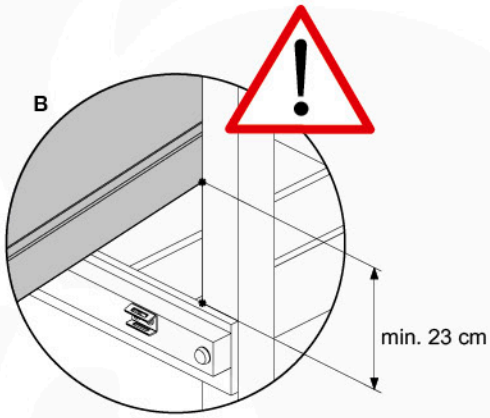

# 17d

**4x**
001_417
120_005

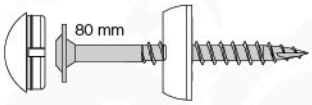


**4x**
002_308
023_031

- Jungle Palace
- Jungle Farm 1
- Jungle Chalet
- Jungle Club
- Jungle Castle

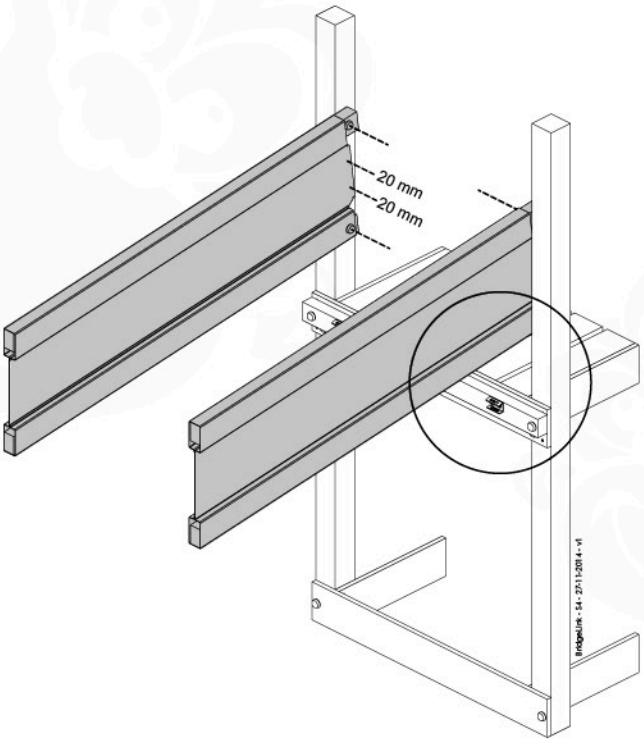


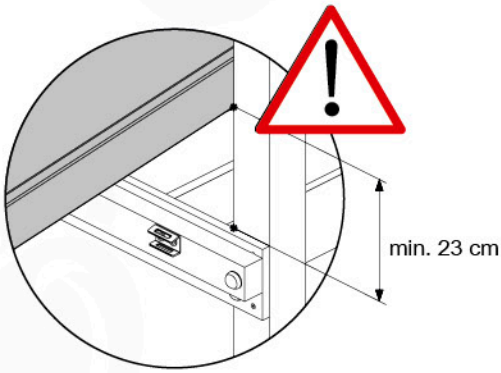

www.junglegym.com - © 2018 Jungle Gym B.V.

# 17e

**4x**
001_417
120_005

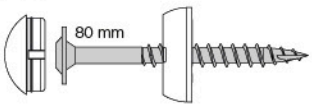


**4x**
002_308
023_031

Jungle Barn 1

Jungle Tower

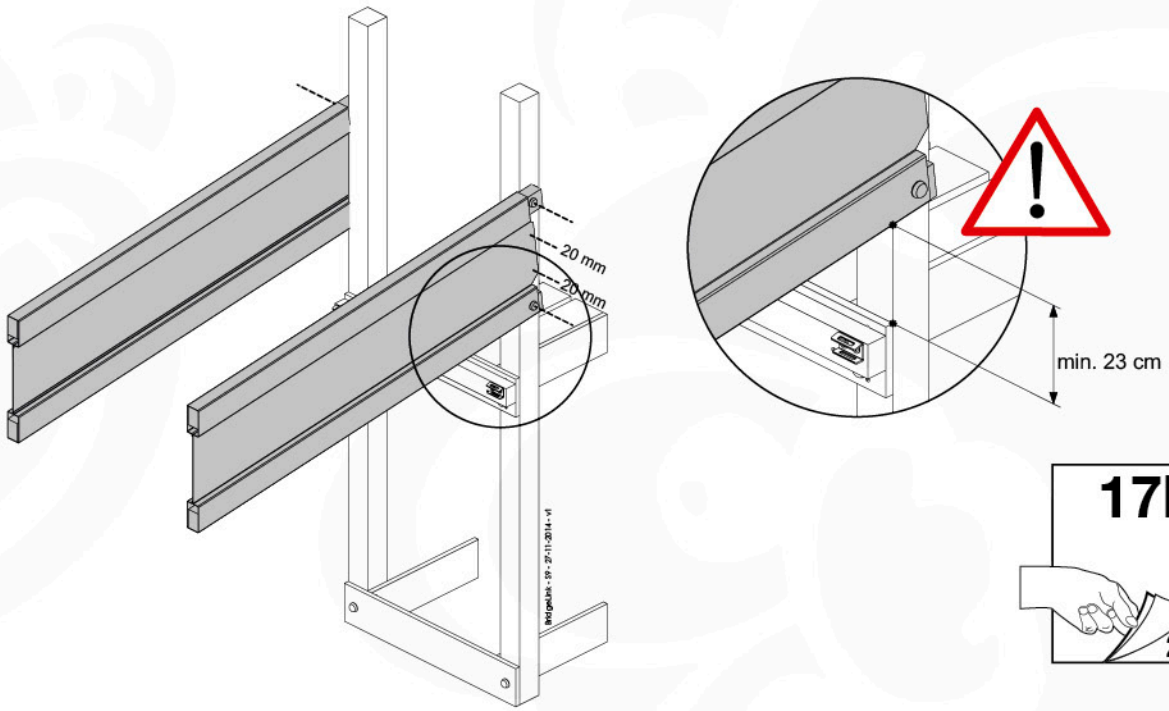


**17h**

24

# 17f

**4x**
001_417
120_005

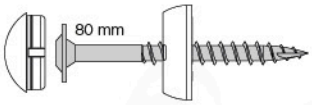


**4x**
002_308
023_031

Crazy
Playhouse CXL

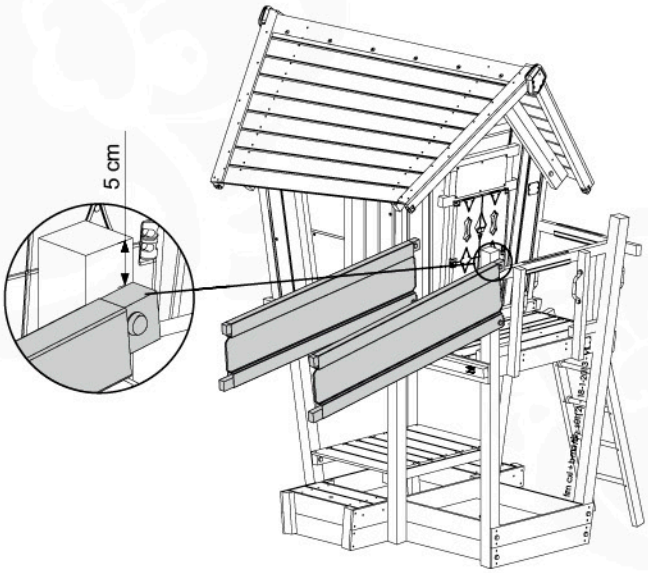


**17h**

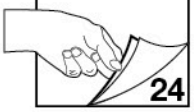

24

# 17g

**4x**
001_417
120_005

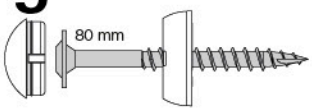


**4x**
002_308
023_031

Jungle Cubby

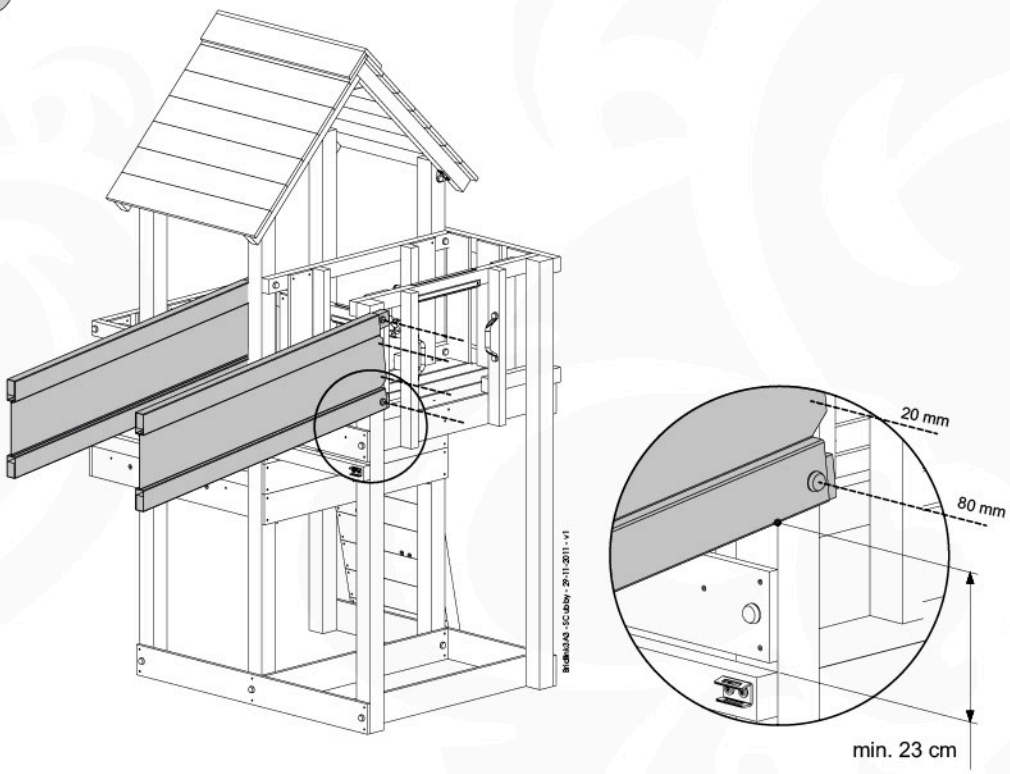

# 17h

**4x**
002_308
023_031

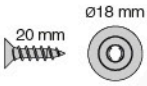


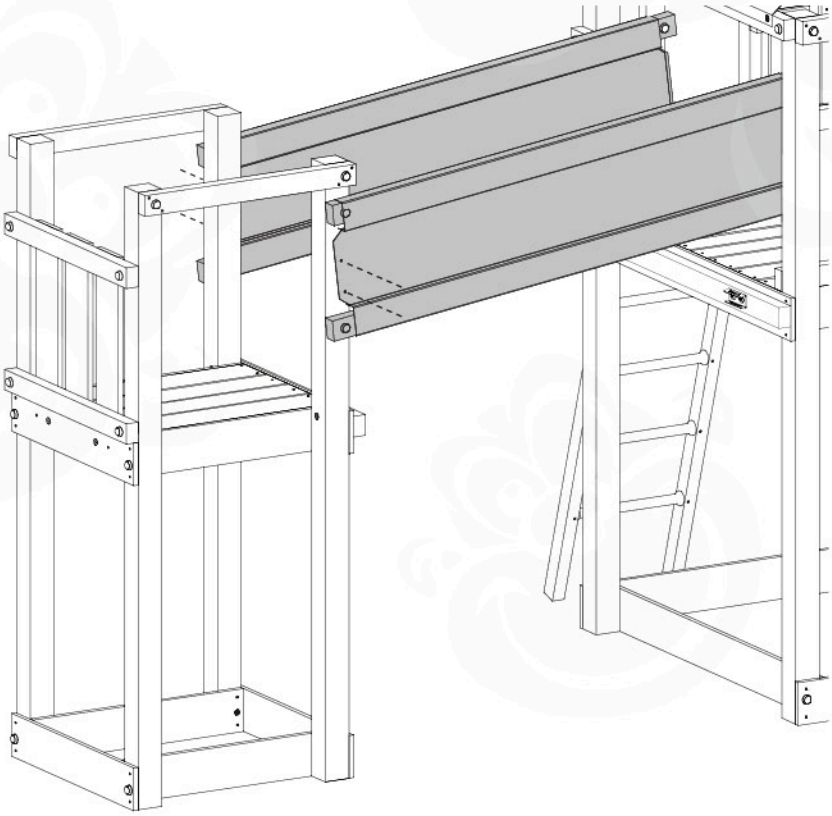


www.junglegym.com - © 2018 Jungle Gym B.V.

# 18a

**4x**
002_036
003_034

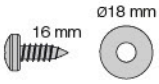


**2x**
121_114

**2x**
022_911

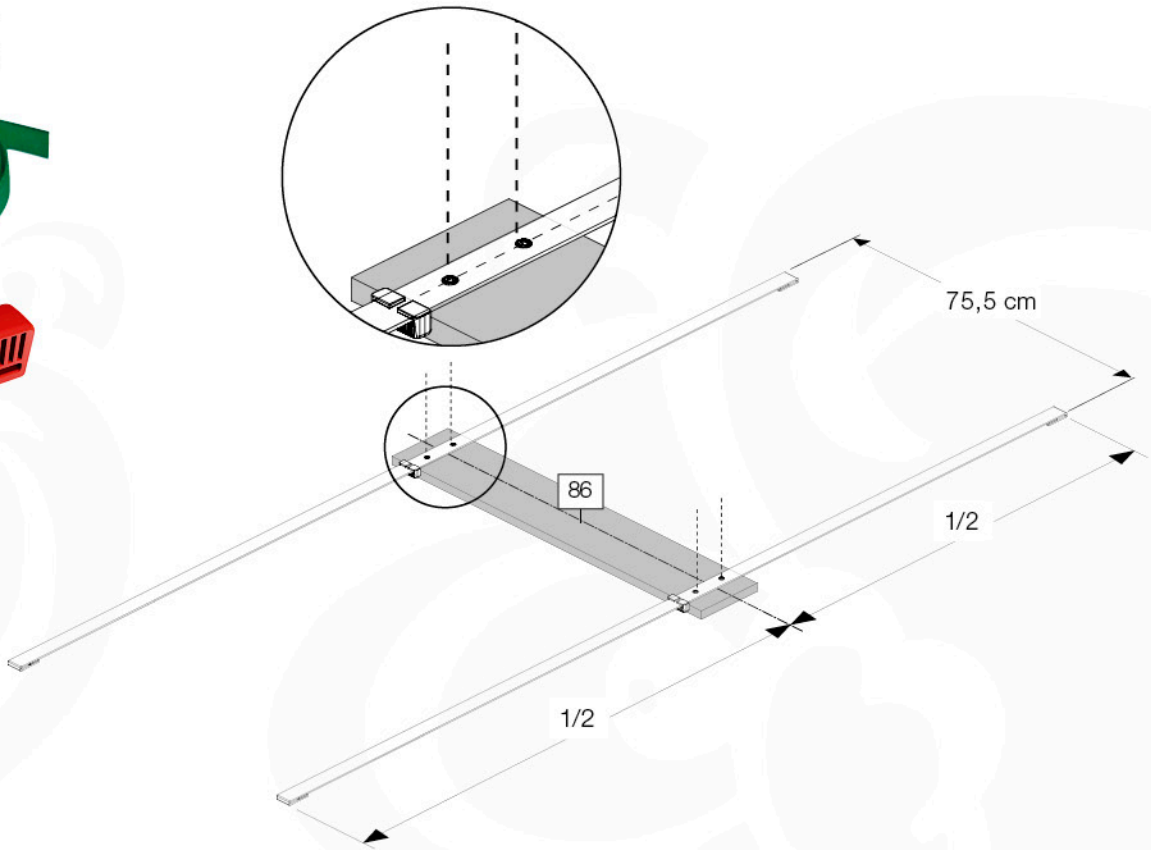


# 18b

**40 - 64x**
002_036
003_034

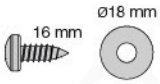


**24 - 36x**
022_911

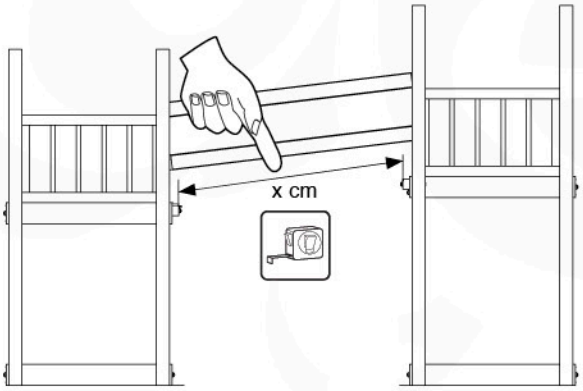


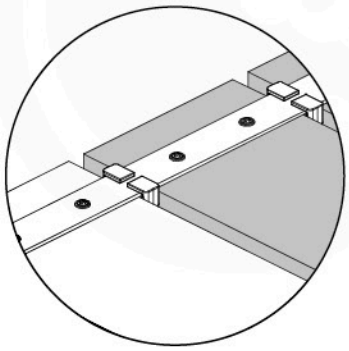

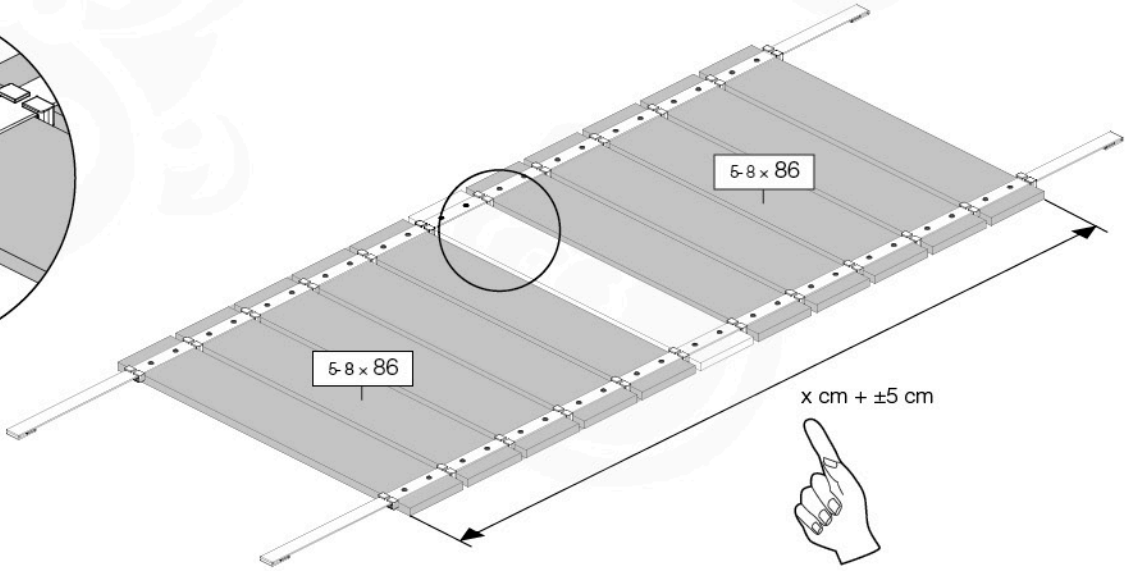


© 2018 Jungle Gym B.V. - www.junglegym.com

# 19a

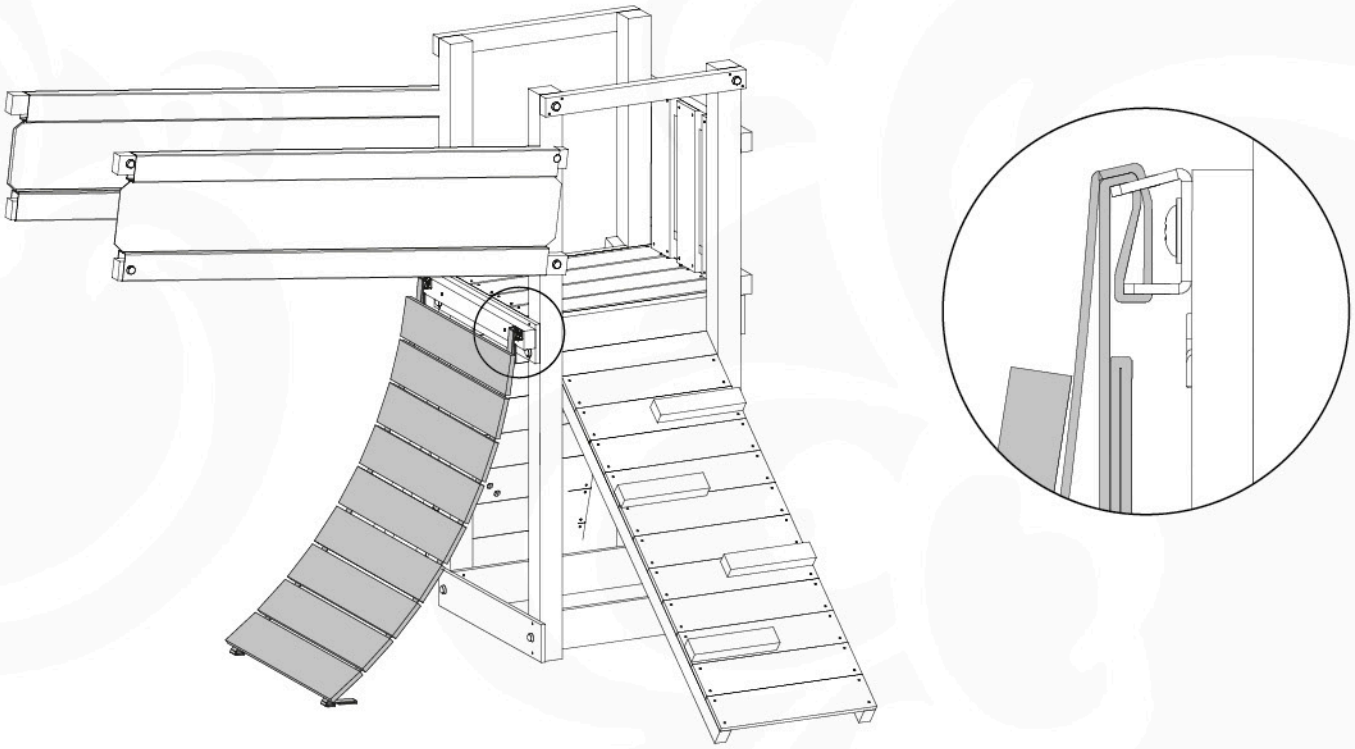

# 19b

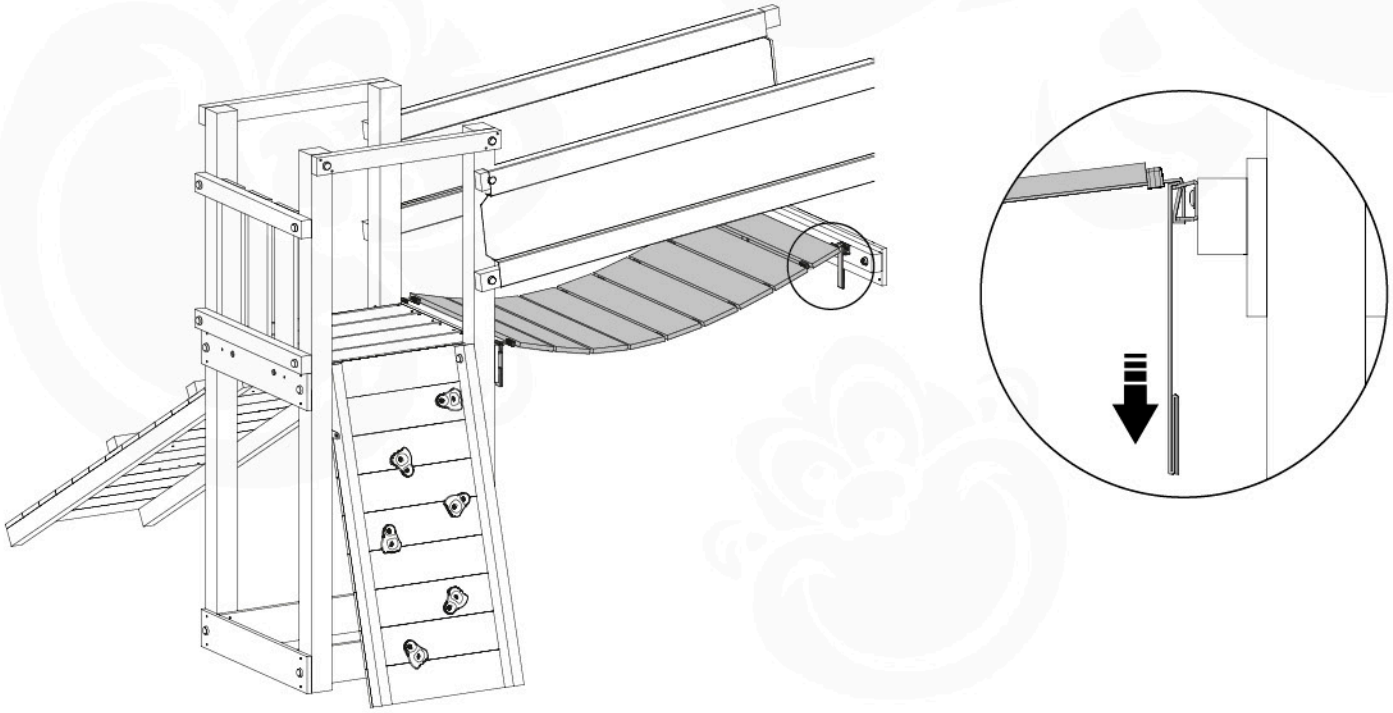

# 19c

8x 002_220 45 mm ø3,5 mm

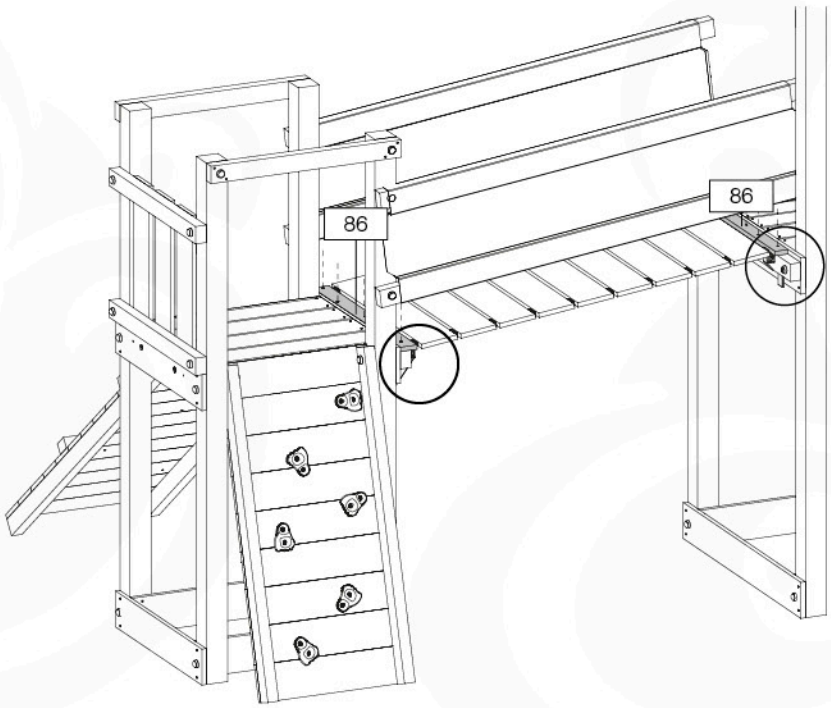


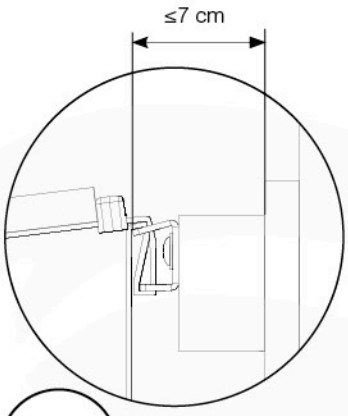


2x

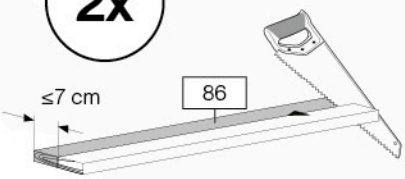


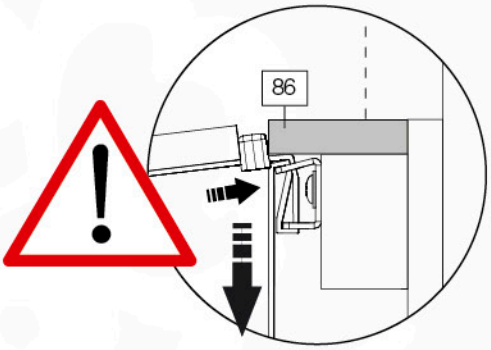


# 19d

4x 002_041 20 mm

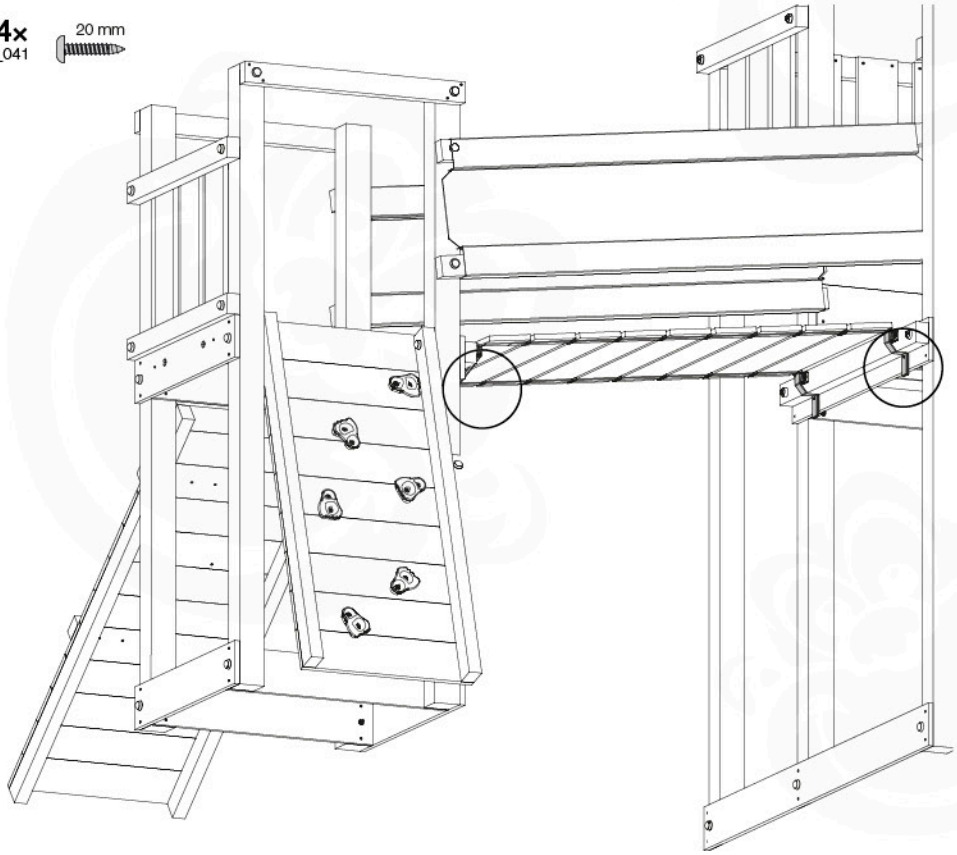

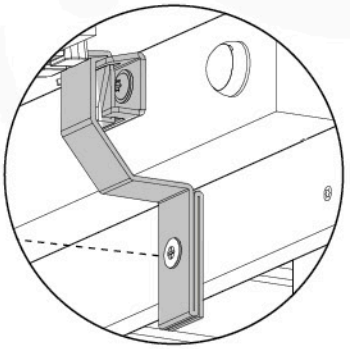

# 20

**20x**
000_101

**2x**
123_200

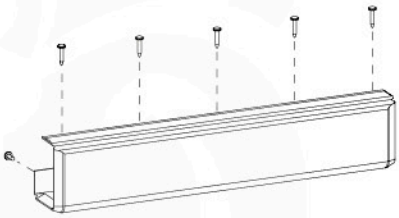

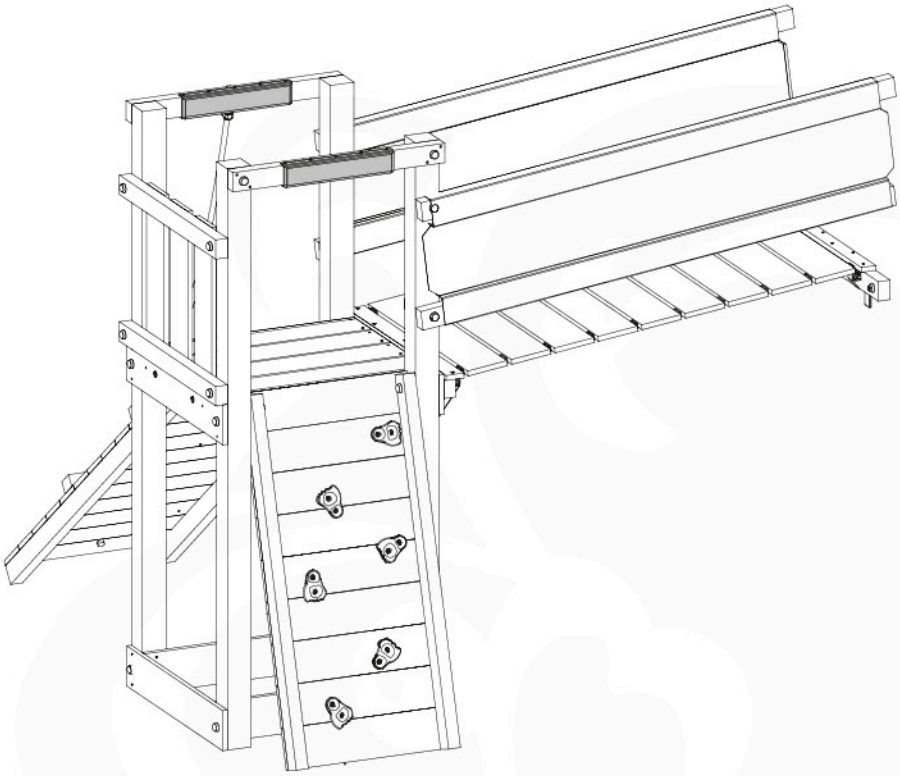

# 21

**8x**
022_845
001_404

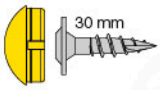

**4x**
022_320

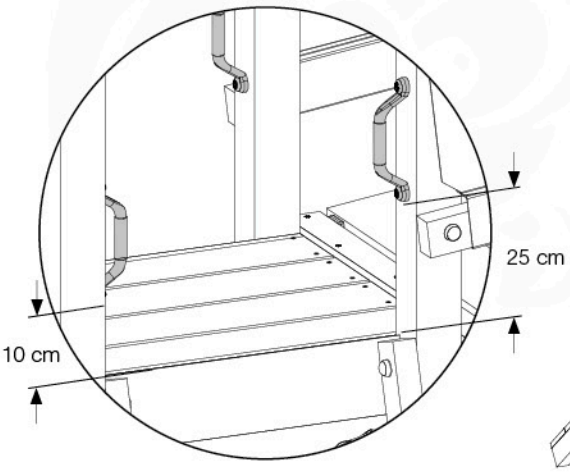


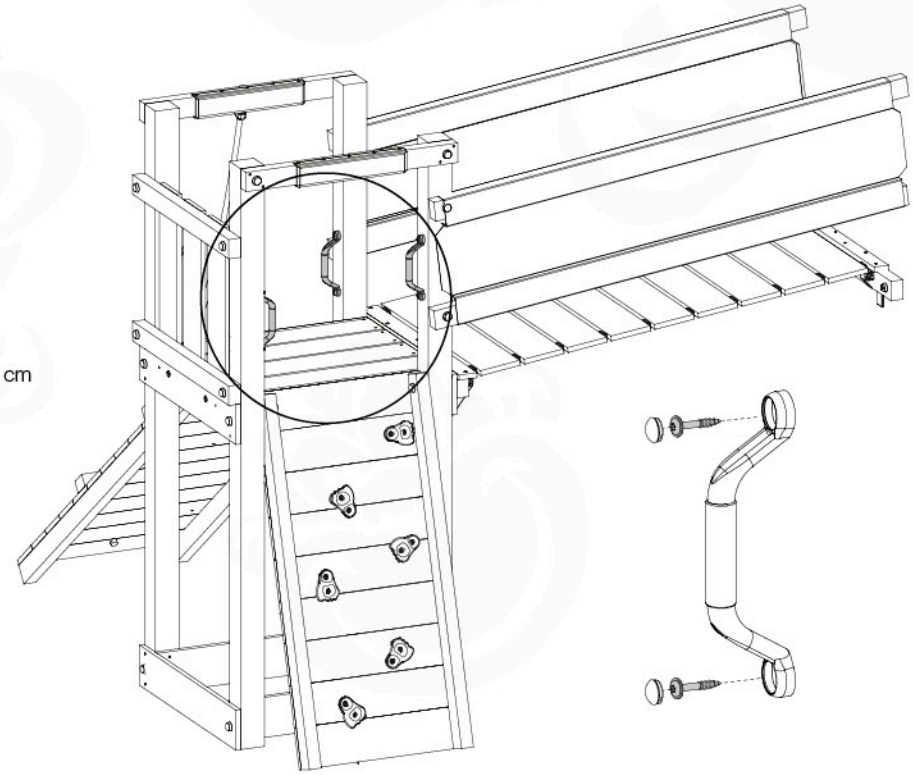



www.junglegym.com - © 2018 Jungle Gym B.V.

# 22

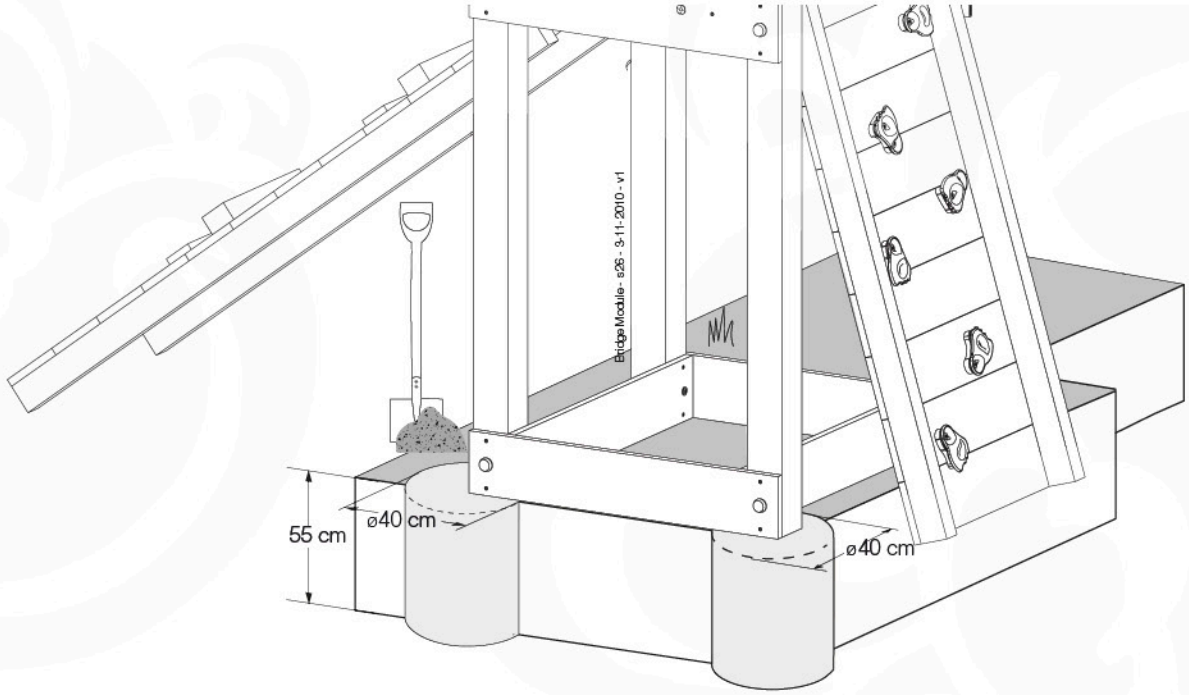


# 23

**4×**
001_406

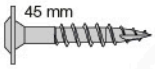

**2×**
005_050

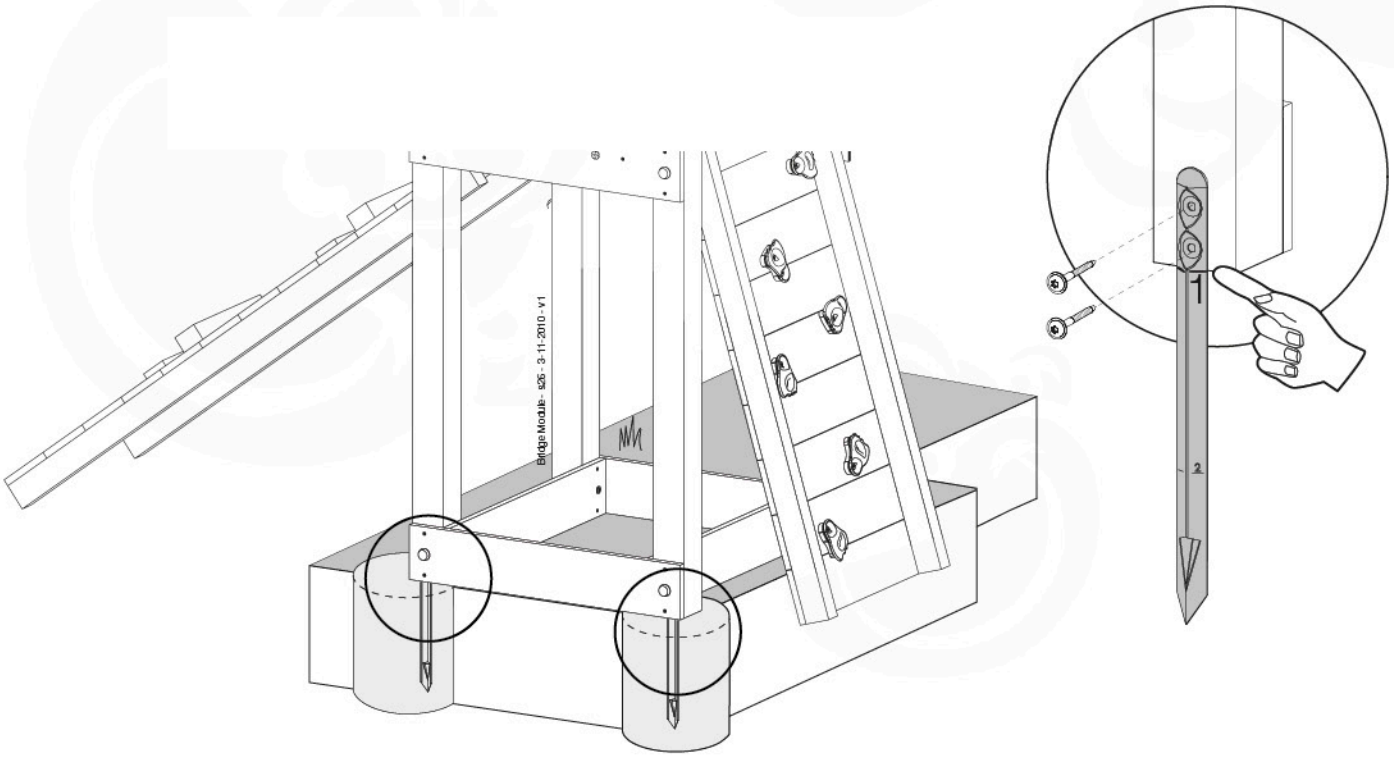

# 24

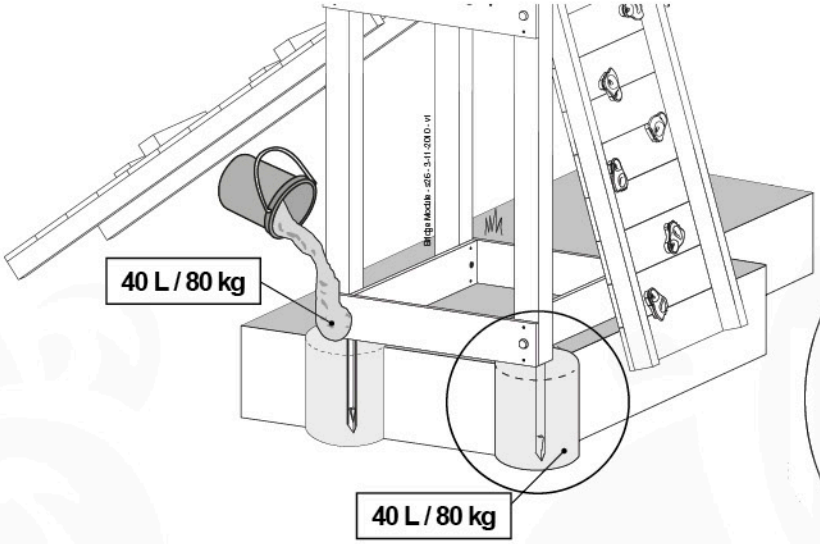


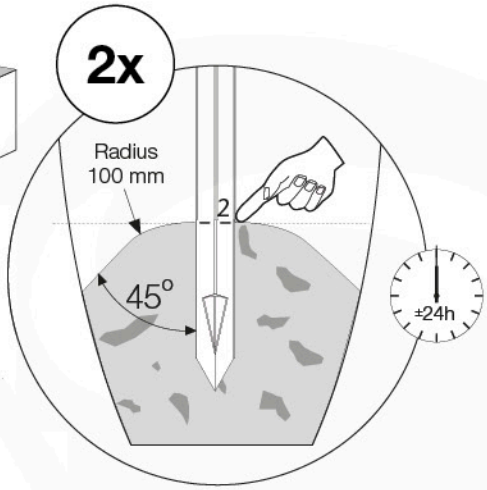


# 25

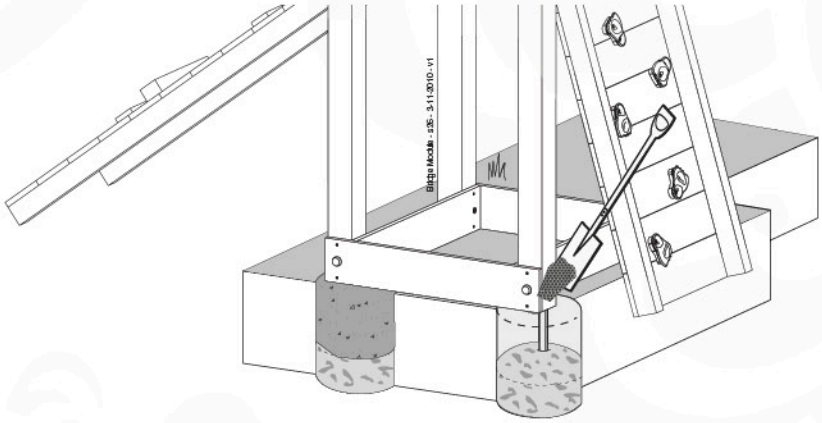

# 26

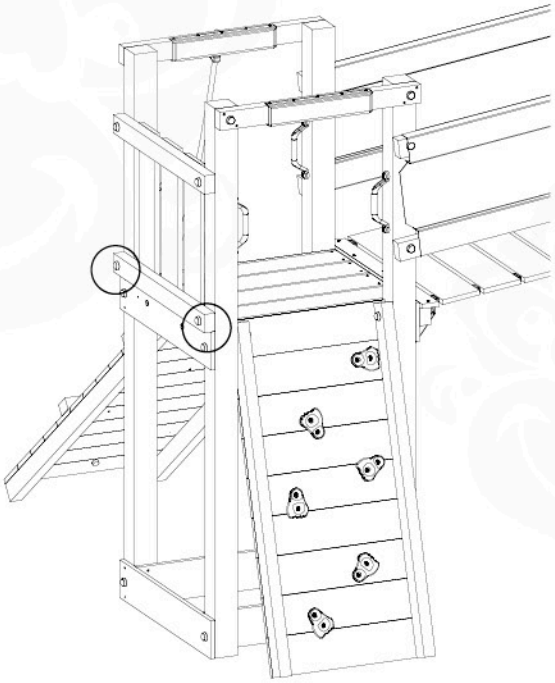

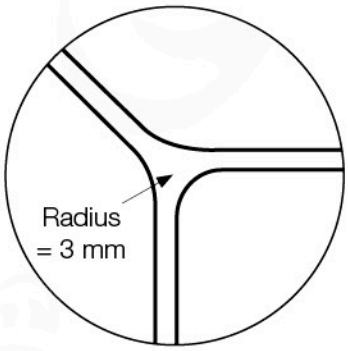


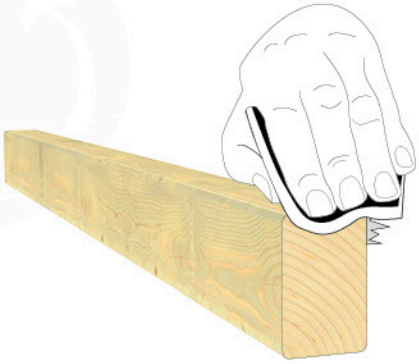


www.junglegym.com - © 2018 Jungle Gym B.V.

# 27 Safety Check

1×
021_107

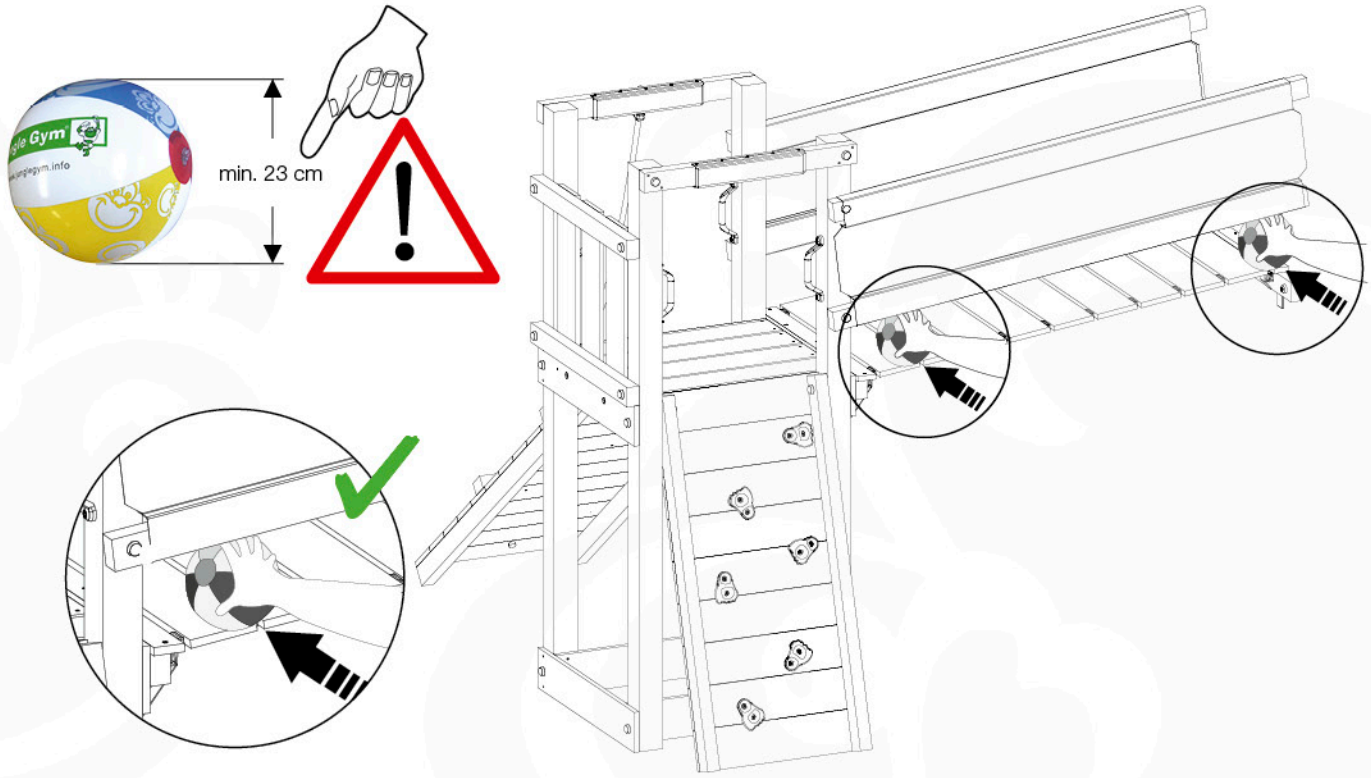


# 28 Product Identification

# 29

6×
002_041

1×

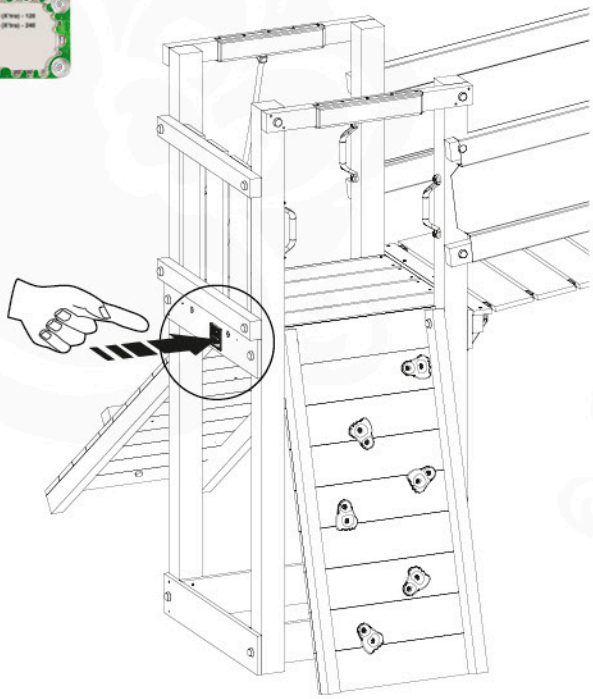

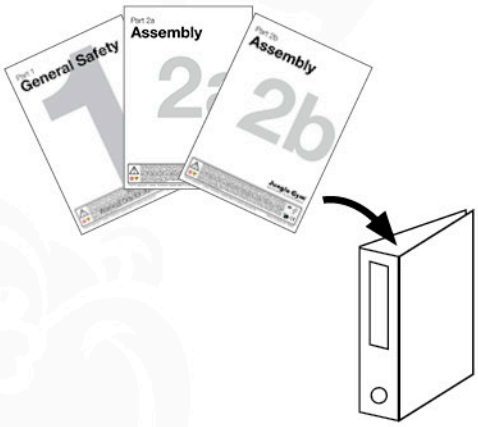

## Playtowers

| | | | | | | | | |
|---|---|---|---|---|---|---|---|---|
| XL | XL | XL | XL | L | L | L | M | M |
| Jungle Palace 801_005 | Jungle Barn 801_007 | Jungle Farm 801_008 | Jungle Mansion 801_009 | Jungle Fort 801_010 | Jungle Chalet 801_013 | Jungle Villa 801_020 | Jungle Lodge 801_040 | Jungle Cabin 801_060 |

| | | | | | | | | | |
|---|---|---|---|---|---|---|---|---|---|
| M | M | M | S | S | S | S | S | S | XS |
| Jungle Shelter 801_065 | Jungle Cubby 801_070 | Jungle Cottage 801_090 | Jungle House 801_095 | Jungle Hut 801_100 | Jungle Home 801_103 | Jungle Casa 801_105 | Jungle Club 801_110 | Jungle Castle 801_120 | Jungle Tower 801_200 |

## Playhouses

Crazy Playhouse 830_140 + Playhouse Frame CXL 830_251 = Crazy Playhouse CXL 835_251

Jungle Playhouse 830_150 + Playhouse Frame L 830_252 = Jungle Playhouse L 835_252

Jungle Playhouse 830_150 + Playhouse Frame XL 830_253 = Jungle Playhouse XL 835_253

## Modules

1-Swing Module 850_176

2-Swing Module 850_177

Climb Module 850_230

Bridge Module 850_240

Playhouse Module 850_246 (_247) — 125 cm (145 cm)

Balcony Module 850_255

Mini Market Module 850_261 — 110 cm

Mini Picnic Module 850_262(_263) — 120 cm (160 cm)

Boat Module 850_410

Train Module 850_415

## Swings

Jungle Peak 801_300

Jungle Swing 801_601 — 240 cm, 220 cm

Jungle Swing 801_602 — 270 cm, 250 cm

## Links

Bridge Link 870_100

Net Link 870_105

## Accessories

Climbing Rope 201_060

Fireman's Pole 201_275

Rock Wall 450_200

1 Step Ladder 450_300

**Wavy Star Slide XL** — 125 cm, 176 cm, 49 cm

- 324_100 Yellow
- 324_200 Blue
- 324_300 Green
- 324_400 Red
- 324_500 Fuchsia
- 324_600 Dark Green

**Wavy Star Slide XXL** — 145 cm, 215 cm, 49 cm

- 334_100 Yellow
- 334_200 Blue
- 334_300 Green
- 334_400 Red
- 334_500 Fuchsia
- 334_600 Dark Green

Sling Swing Kit Yellow 250_001

Monkey Bar Kit Blue 250_013

Baby Swing Kit Red 250_025

Swing Seat Kit Red 250_034

Twist Disk Kit Green 250_053

Steering Wheel Yellow 201_280

Fun Phone 201_285

StarOscope™ 201_290

PeekOscope™ 201_295

Tic Tac Toe 450_310

Bucket 450_320

Talking Tube™ 450_330

Swing Hook Screw 2x 201_115

Bolt Caps 201_200

Cat Stop™ 201_220 — 150 x 160 cm

Handgrips
- 201_250 Yellow
- 201_260 Blue
- 201_270 Green

Ground Anchors 250_070

RopeLocks™ 201_400

Swing Rope Green 201_530

v 2.10.1

Jungle Gym®
BACKYARD PLAYGROUNDS

Availability of Jungle Gym® products may vary between distributors and countries.
Subject to alterations and printing errors. All rights reserved. Printed in China.
P.O. Box 75083 - 1070 AB - Amsterdam - The Netherlands

www.junglegym.com