展开尺寸：400x120mm, 单页尺寸：100x120mm

PHILIPS

Alpenglow
9290031877

User manual
Benutzerhandbuch
Notice d'emploi
Manual de usuario
Manual do usuário
Manuale d'uso
Gebruiksaanwijzing

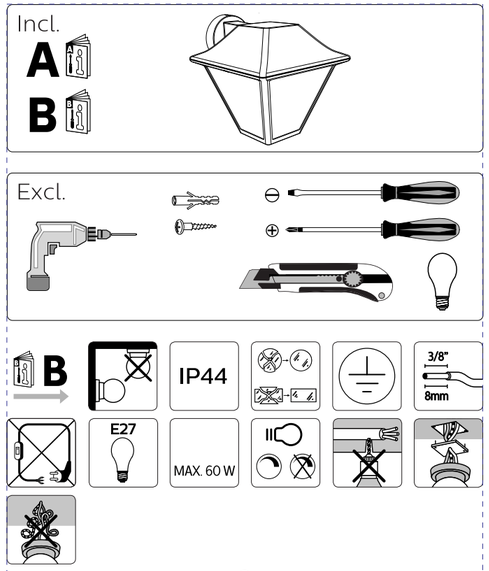

2

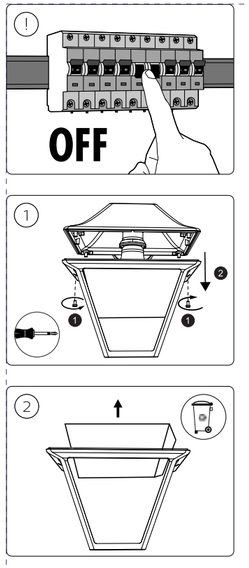

3

Signify Commercial UK Limited
Unit 3, Guildford Business Park,
Guildford, Surrey, GU2 8XG, UK

Signify
I.B.R.S. / C.C.R.I. Numéro 10461
6600 VB Eindhoven, the Netherlands
0100800-74454775

All rights reserved

Philips and the Philips Shield Emblem are registered trademarks of Koninklijke Philips N.V. and are used under license.

www.philips.com/lighting

© 2021 Signify Holding
signify

3241.658.90381

展开尺寸：400x120mm, 单页尺寸：100x120mm

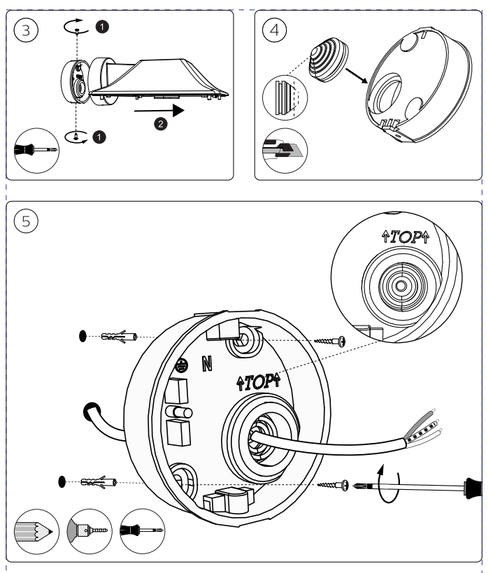

4

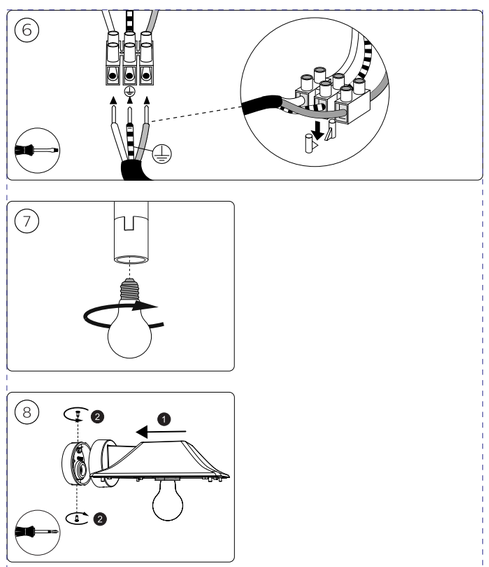

5

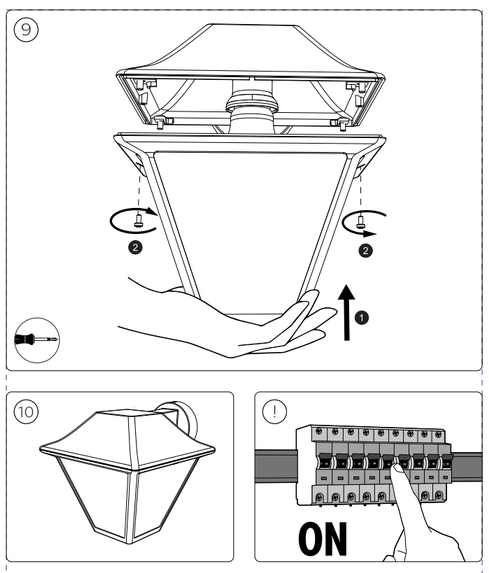

6

SIGNIFY	
Brand	PHL
Product Family	LED
Shape	
Wattage	
Template Ref.	N/A
SGS number	6526836
12-NC.NBR	324165890381
Masterdrawing	N/A
CRC Ref.	

Barcode No. N/A

Operator(s) Jennyzhu

VERSION No. v3

Date in 20171110
Date amended 20210922

Black
Diecut

Date Check

☐ Check briefing Traffic

Artwork document

☐ Legend ☐ Number of colors
☐ 12NC ☐ Trapping/Bleed
☐ Barcode ☐ Images hires
☐ Diecut ☐ Jobsizes

Approval

☐ QC Lithographer SGS Shanghai Production
☐ Product Manager allen.lai@signify.com
☐ Traffic Manager Esdon Lu