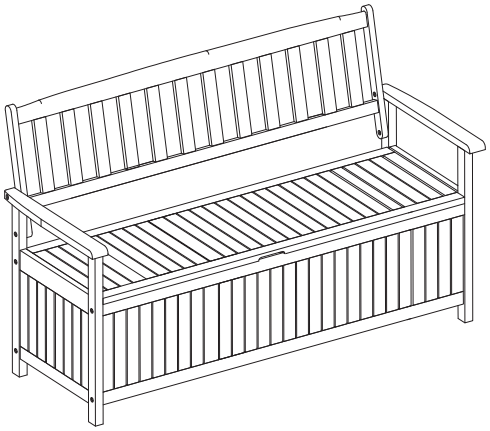
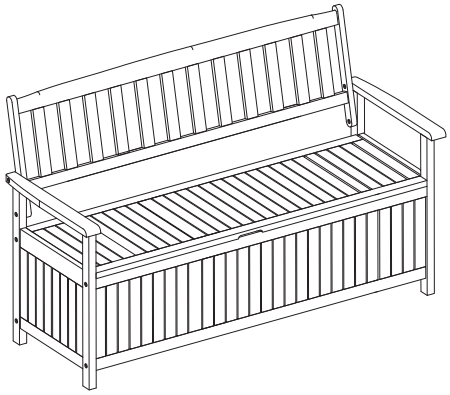
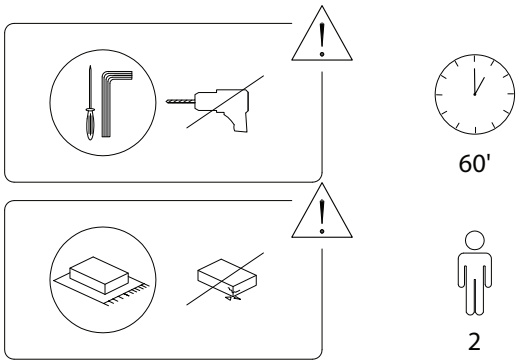
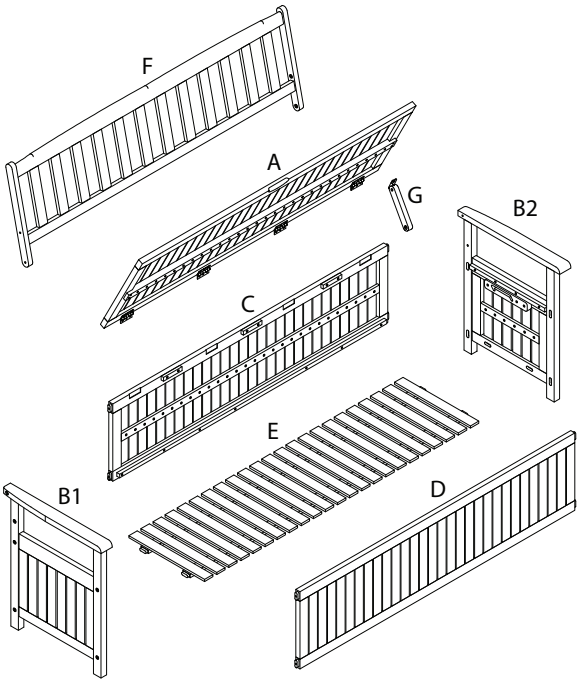
SOVANA

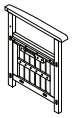
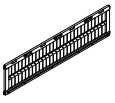
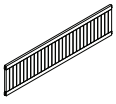






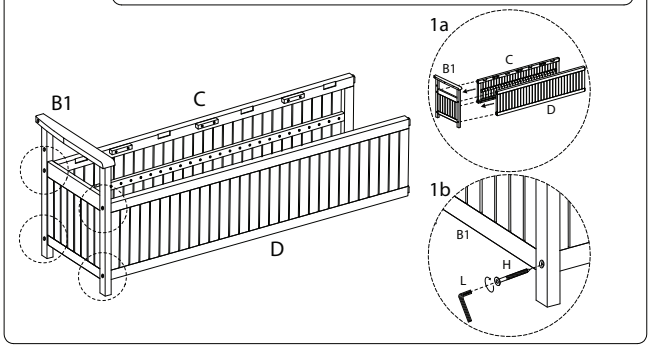


E	F	G
		
x 1	x 1	x 1
H	**I**	**J**
M7 x 90	M4 x 15	M8 x 45
x 8	x 12	x 2
K	**L**	**M**
M8 x 60		M4 x 20
x 2	x 2	x 2

A	B1	B2	C	D
				
x 1	x 1	x 1	x 1	x 1

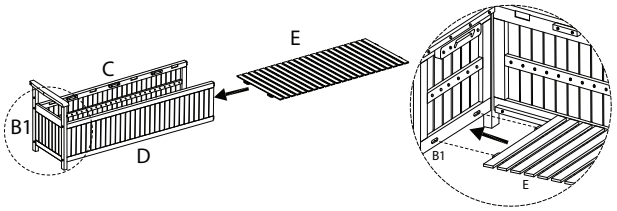
1

B1	C	D	H	L
x 1	x 1	x 1	M7 x 90 x 4	x 2



2

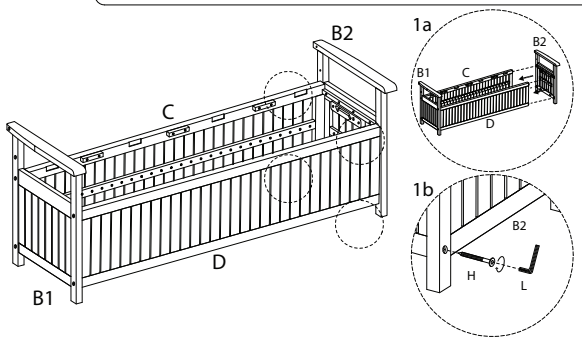
E
x 1



Beliani
572/SOVANA 160/230323/

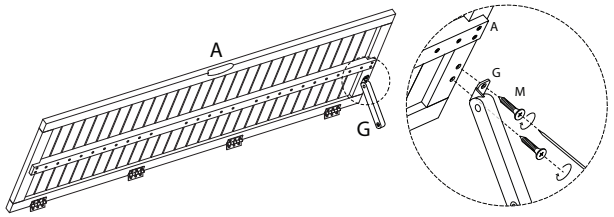
3

B2	H	L
x 1	M7 x 90 x 4	x 2



4

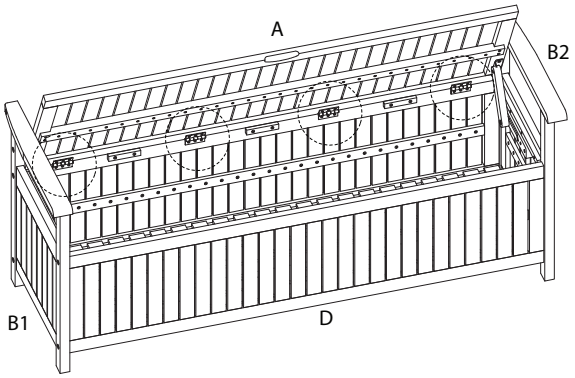
A	G	M
x 1	x 1	M4 x 20 x 2

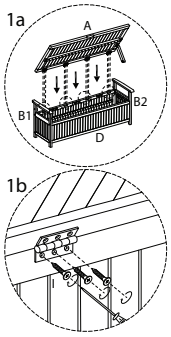


Beliani
572/SOVANA 160/230323/

5

I
M4 x 15 x 12

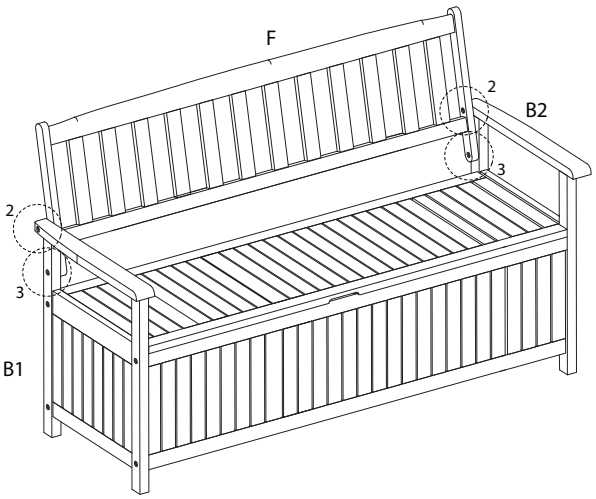


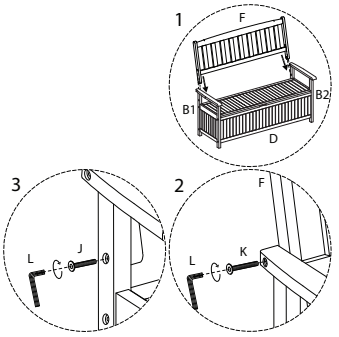


Beliani
572/SOVANA 160/230323/

6

F	J	K	L
x 1	M8 x 45 x 2	M8 x 60 x 2	x 2





Beliani
572/SOVANA 160/230323/

!

