EN DE FR ES

404519
404520

INSTRUCTION GUIDE/GEBRAUCHSANLEITUNG/ NOTICE D'UTILISATION/MANUAL DE INSTRUCCIONES

Achtung: Tragen sie beim Aufbau Arbeitshandschuhe um Verletzungen zu vermeiden!
Caution: Wear work gloves to avoid injury!
Avertissement: Porter des gants de protection pour éviter les blessures!
Advertencia: ¡Lleve guantes de trabajo para evitar heridas!

RETAIN FOR FUTURE REFERENCE
FÜR KÜNFTIGE VERWENDUNG AUFBEWAHREN
A CONSERVER POUR UNE UTILISATION FUTURE
CONSERVAR PARA UNA UTILIZACIÓN FUTURA

TecTake GmbH,
Tauberweg 41, D-97999 Igersheim, Germany

Size of 404519/404520
Maße von 404519/404520
Taille de 404519/404520
Tamaño 404519/404520

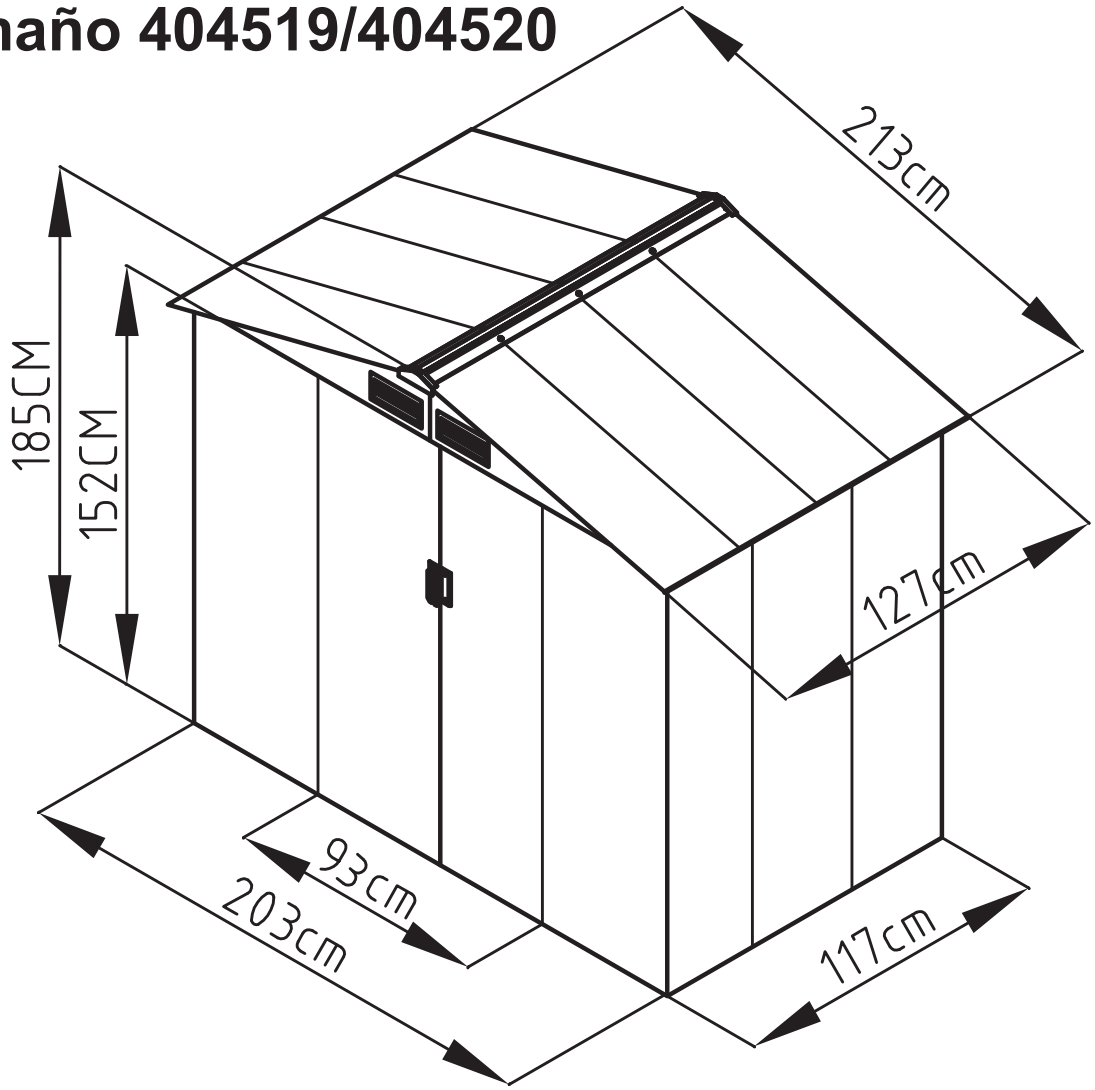

Area of installation requirement/
Benötigter Raum zum Aufstellen
Domaine d'exigence d'installation
Área requerida para la instalación

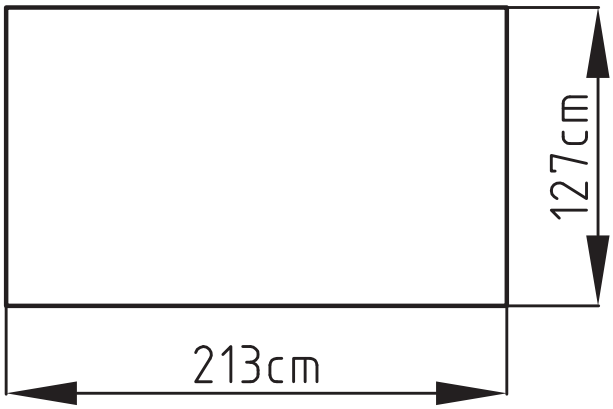

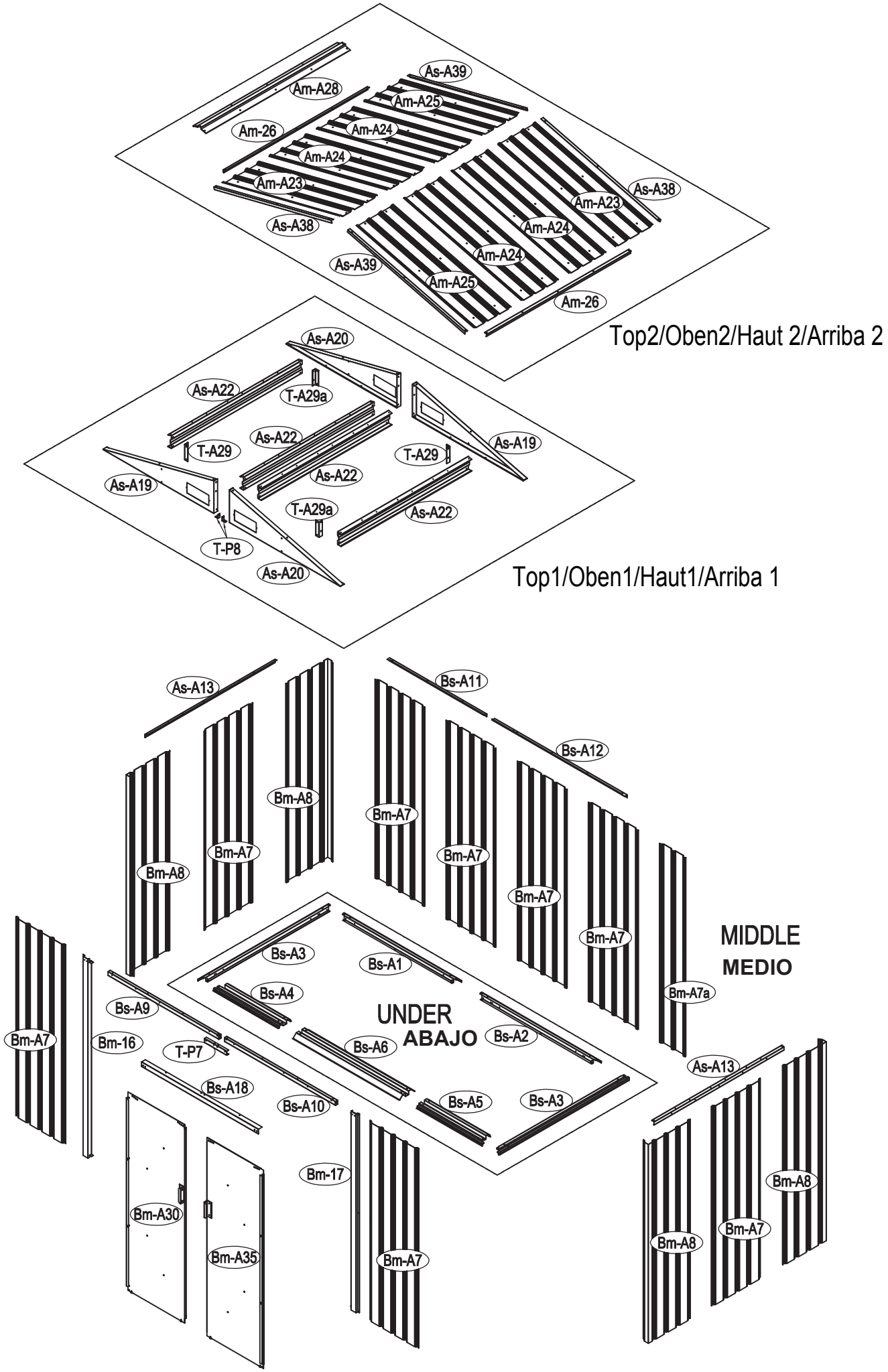
As-A39
Am-A28
Am-A25
Am-26
Am-A24
Am-A24
Am-A23
As-A38
Am-A23
As-A38
Am-A24
Am-A24
As-A39
Am-A25
Am-26
Top2/Oben2/Haut 2/Arriba 2
As-A20
As-A22
T-A29a
As-A22
T-A29
As-A19
T-A29
As-A19
As-A22
T-A29a
As-A22
T-P8
As-A20
Top1/Oben1/Haut1/Arriba 1
As-A13
Bs-A11
Bs-A12
Bm-A8
Bm-A7
Bm-A7
Bm-A8
Bm-A7
Bm-A7
Bm-A7
MIDDLE
MEDIO
Bm-A7a
Bs-A3
Bs-A1
Bs-A4
UNDER
ABAJO
Bs-A2
Bs-A9
Bm-A7
Bm-16
T-P7
Bs-A6
As-A13
Bs-A18
Bs-A10
Bs-A5
Bs-A3
Bm-17
Bm-A8
Bm-A30
Bm-A7
Bm-A8
Bm-A35
Bm-A7

NO.	Image/Bild/image/Imagen	mm	QTY
Under/Unten/Sous/Abajo			
Bs-A1		1055	x1
Bs-A2		1074	x1
Bs-A3		1174	x2
Bs-A4		590	x1
Bs-A5		590	x1
Bs-A6		958	x1
Middle/Mitte/Milieu/Medio			
Bm-A7		1548	x8
Bm-A7a		1548	x1
Bm-A8		1548	x4
Bs-A9		995	x1
Bs-A10		995	x1
Bs-A11		873	x1
Bs-A12		1190	x1
As-A13		1168	x2
Bm-16		1548	x1
Bm-17		1548	x1
Bs-A18		1044	x1
Top1/Oben1/Haut1/Arriba 1			
As-A19		995.3	x2
As-A20		995.3	x2
As-A22		1174	x4
T-A29		120	x2
T-A29a		120	x2
Top2/Oben2/Haut 2 /Arriba 2			
Am-A23		1090	x2
Am-A24		1090	x4
Am-A25		1090	x2
Am-26		1296	x2
As-A38		1088	x2
As-A39		1088	x2
Am-A28		1298	x1
Dood/Tür/par/Puerta			
Bm-A30		1543	x1

NO.	Image/Bild/image/Imagen	mm	QTY
Bm-A35		1543	x1
Bm-31		1483	x2
Bm-A32		876	x4
Bs-A33		486	x1
Bs-A34		486	x1
Bs-A36		486	x1
Bs-A37		486	x1
Annex/Montagematerial/Annexe/Material de montaje			
T-P1			x4
T-P2			x4
T-P3			x4
T-P4			x2
TP5A			x4
T-P6			x2
T-P7		200	x1
T-P8			x2
Am-A40			x176
Am-A41		ST4X10	x194
Am-A42		ST4X16	x16
Am-A43		M4X10	x70
Am-A44			x158
V-A1		1024	x5
V-A2		512	x2
W			x1

1

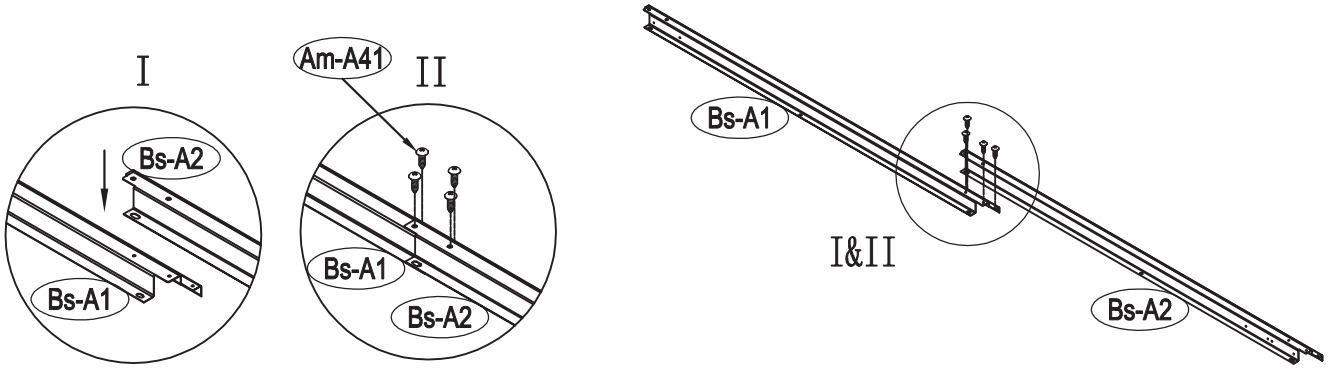

Am-A41:4pcs

2

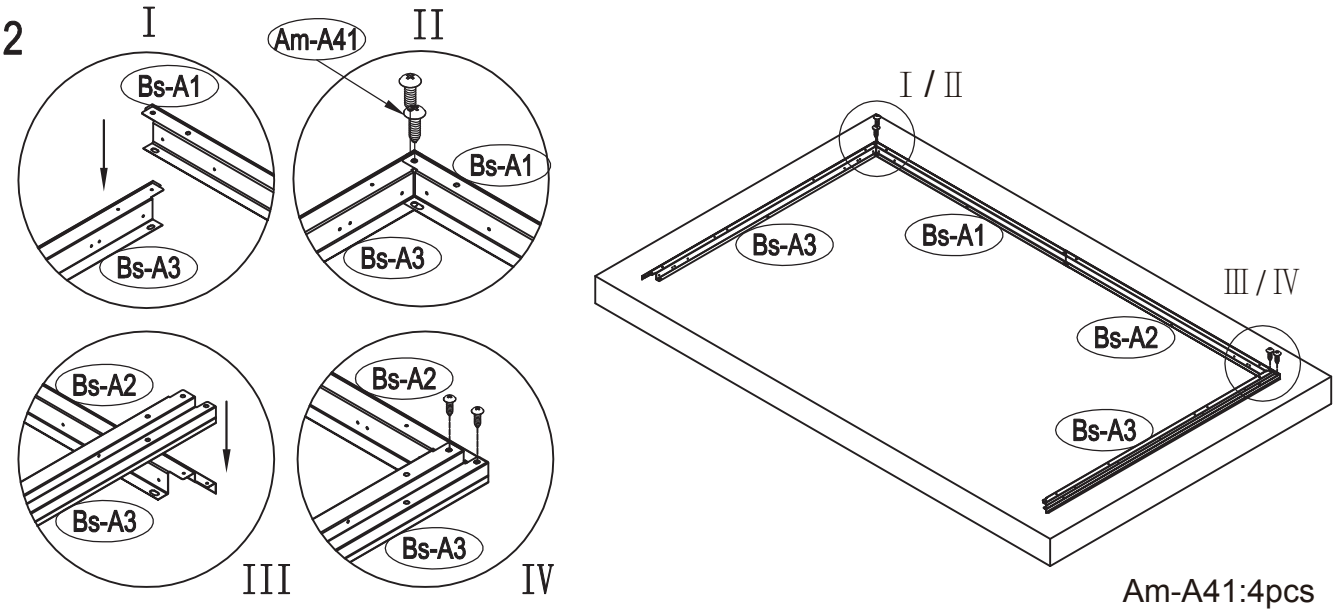

Am-A41:4pcs

3

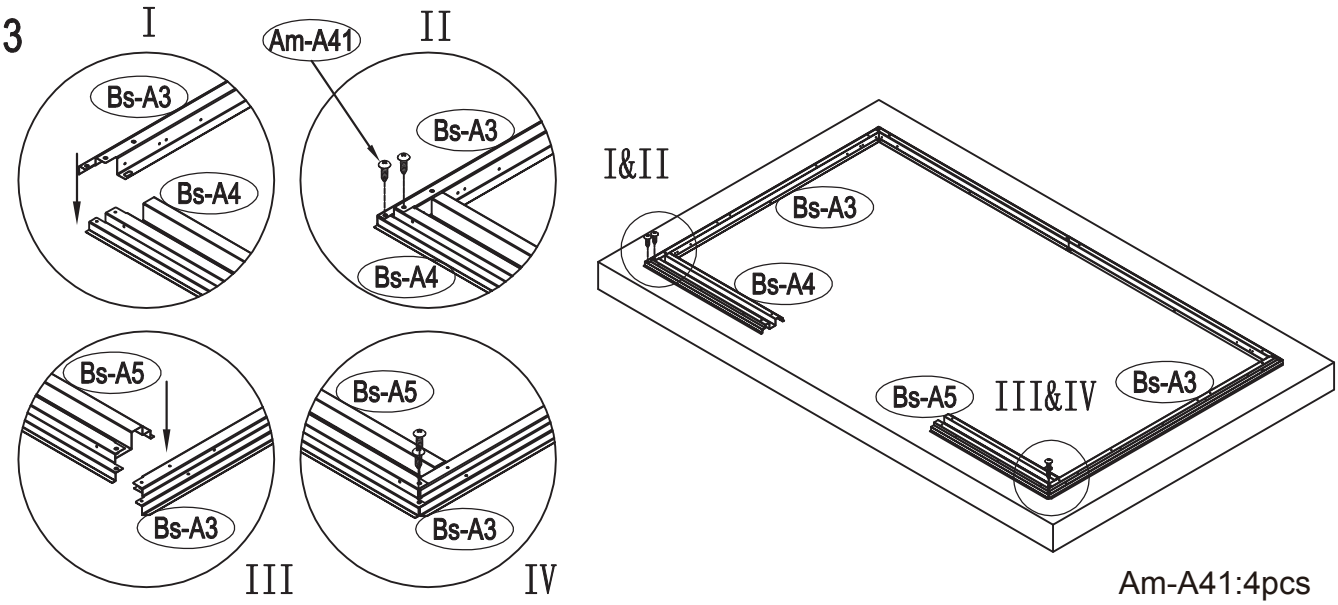

Am-A41:4pcs

4

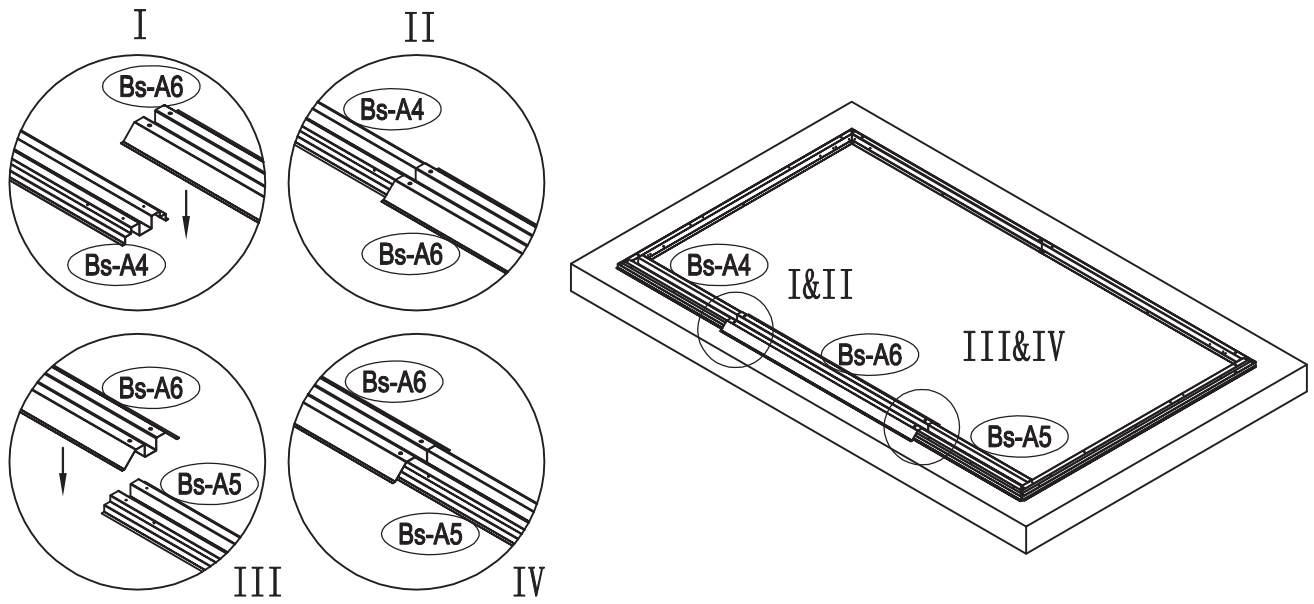

5

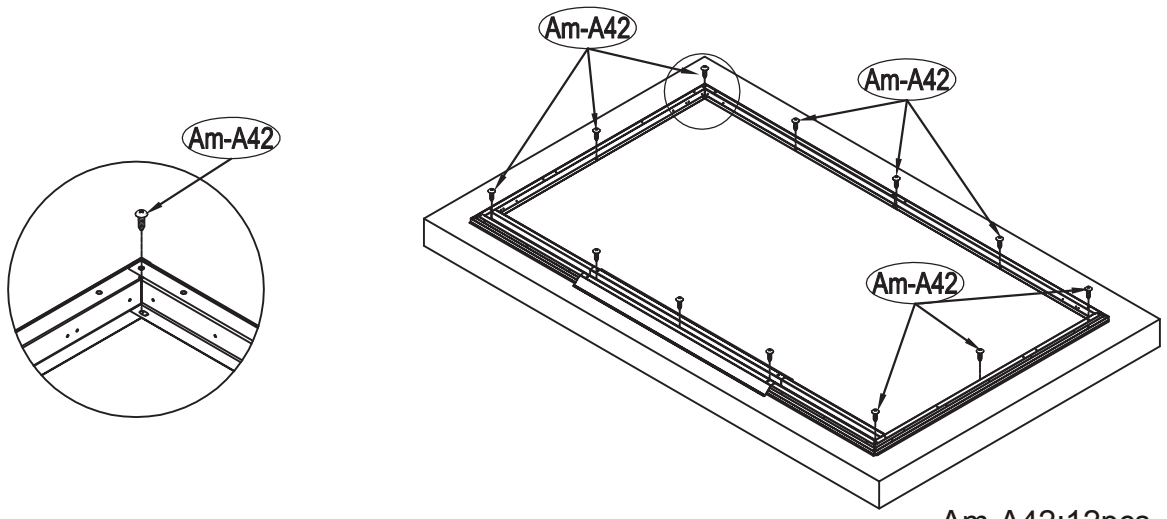

Am-A42:12pcs

6

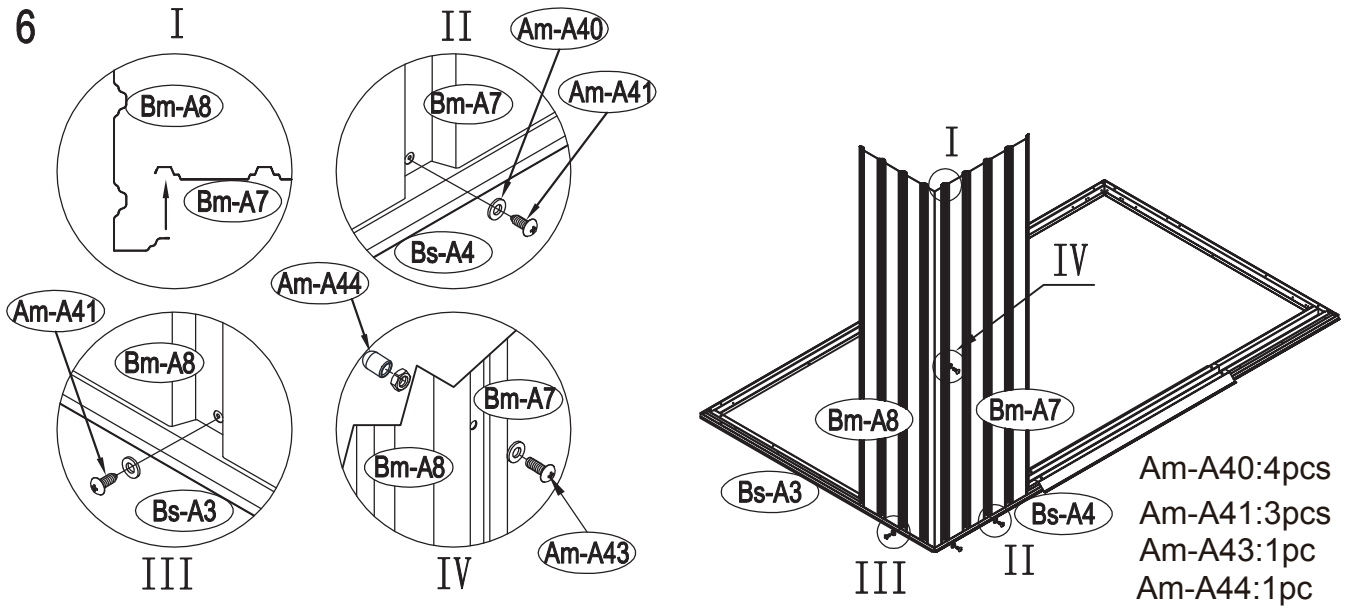

Am-A40:4pcs
Am-A41:3pcs
Am-A43:1pc
Am-A44:1pc

7

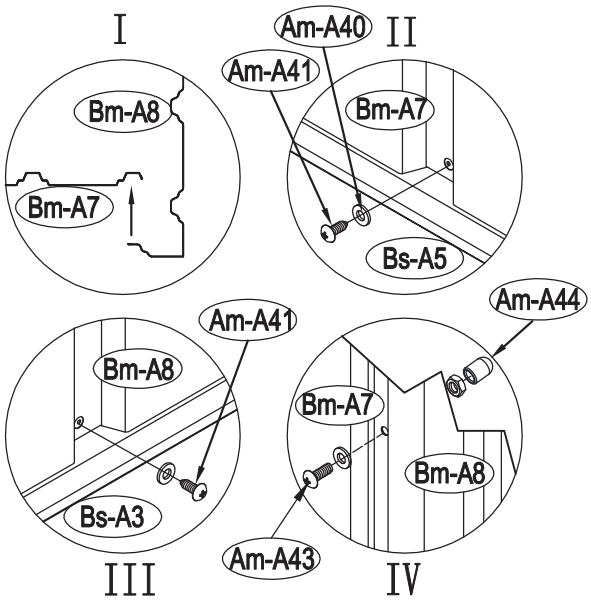

Am-A40:4pcs
Am-A41:3pcs
Am-A43:1pc
Am-A44:1pc

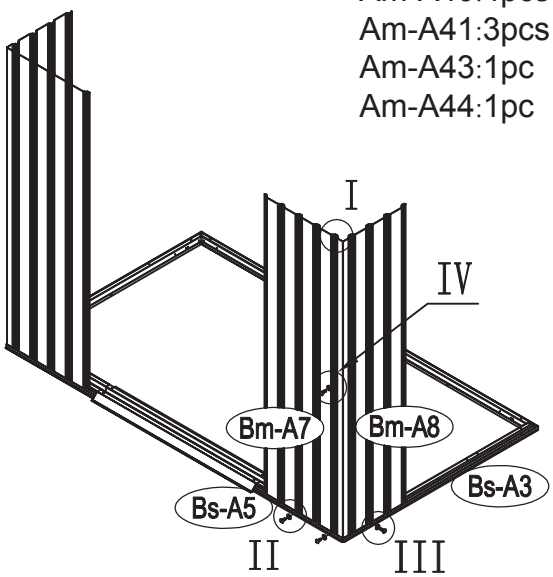

8

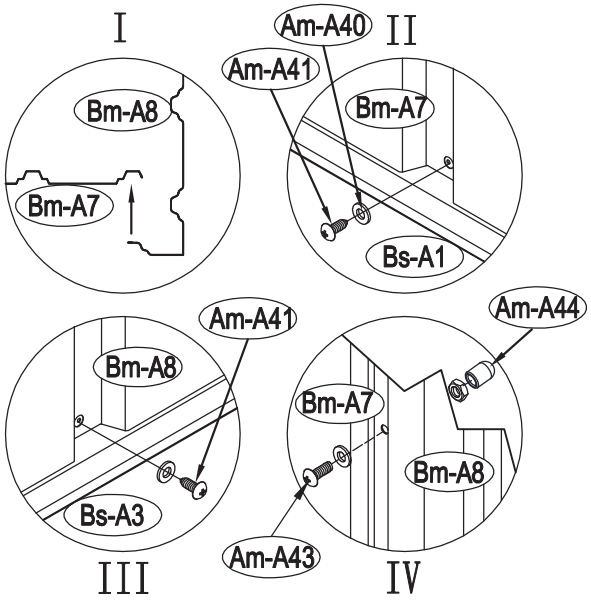

Am-A40:4pcs
Am-A41:3pcs
Am-A43:1pc
Am-A44:1pc

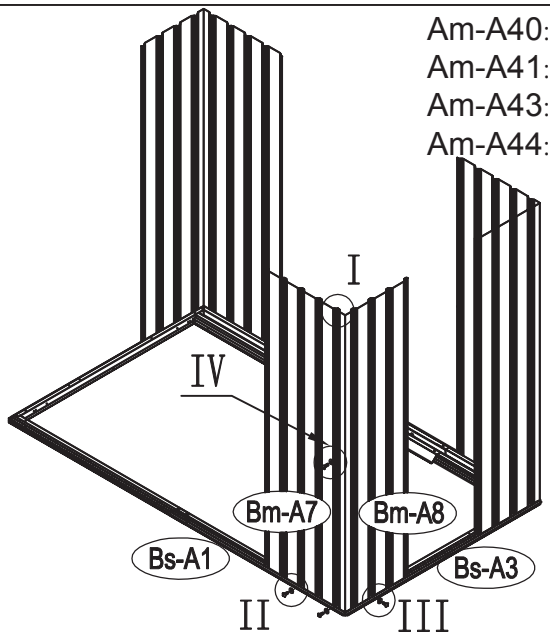

9

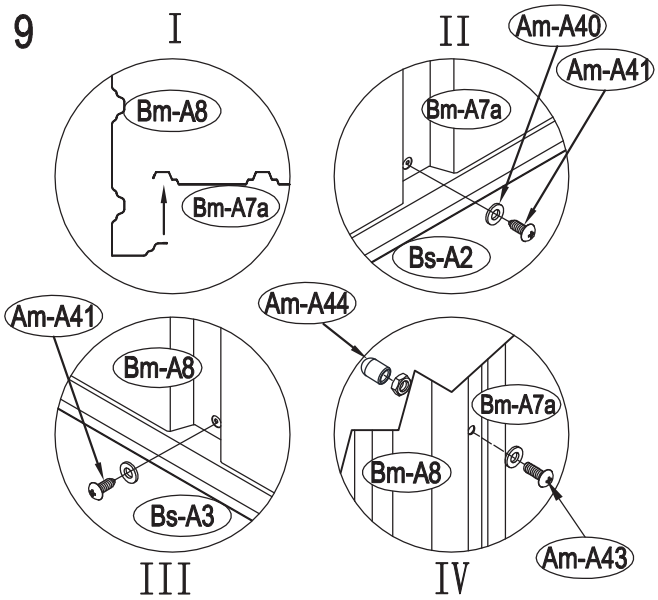

Am-A40:3pcs
Am-A41:2pcs
Am-A43:1pc
Am-A44:1pc

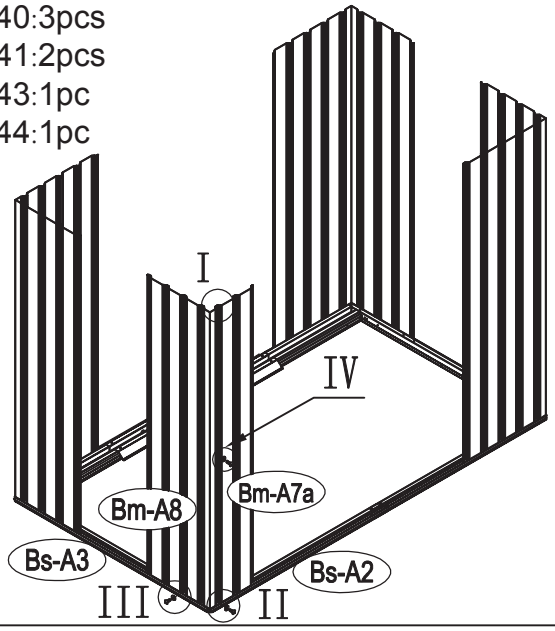

10

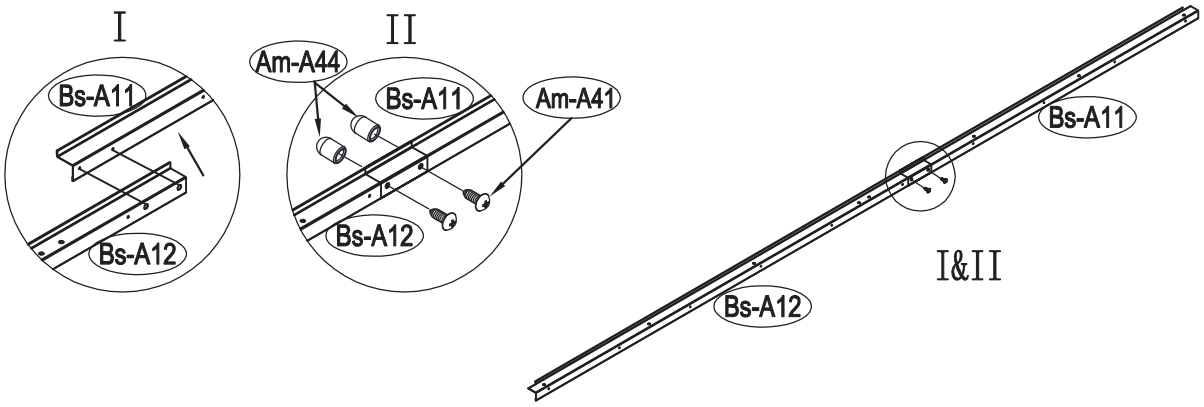

Am-A41:2pcs
Am-A44:2pcs

11

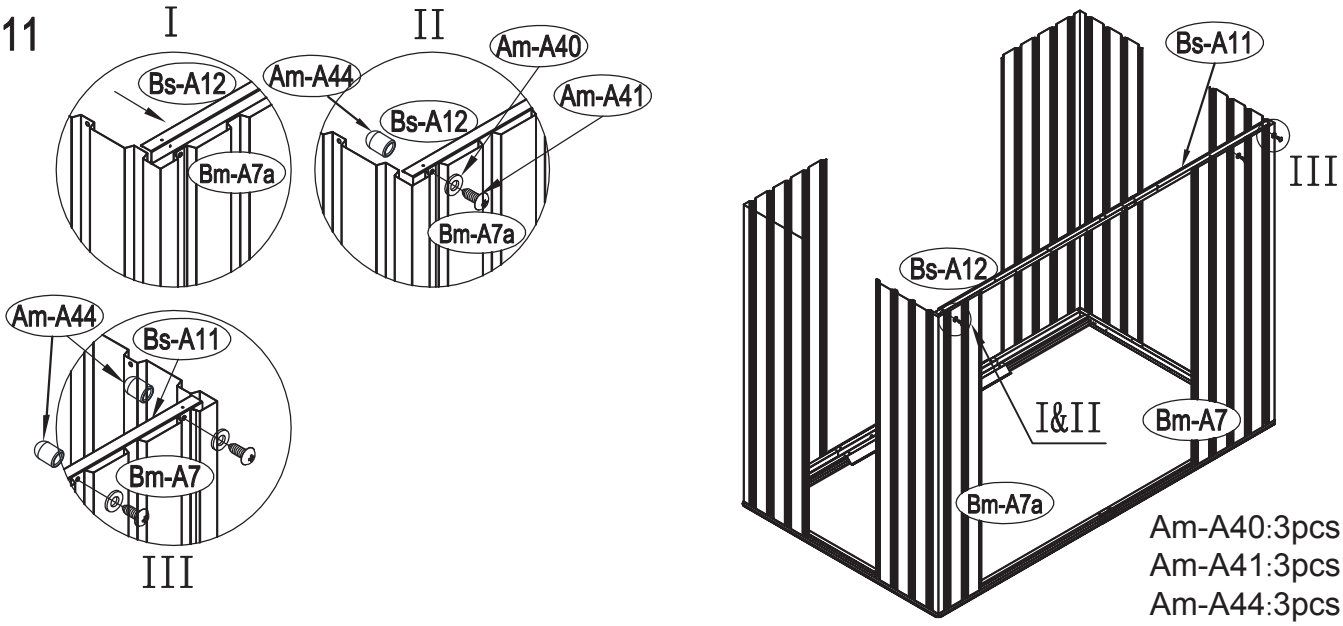

Am-A40:3pcs
Am-A41:3pcs
Am-A44:3pcs

12

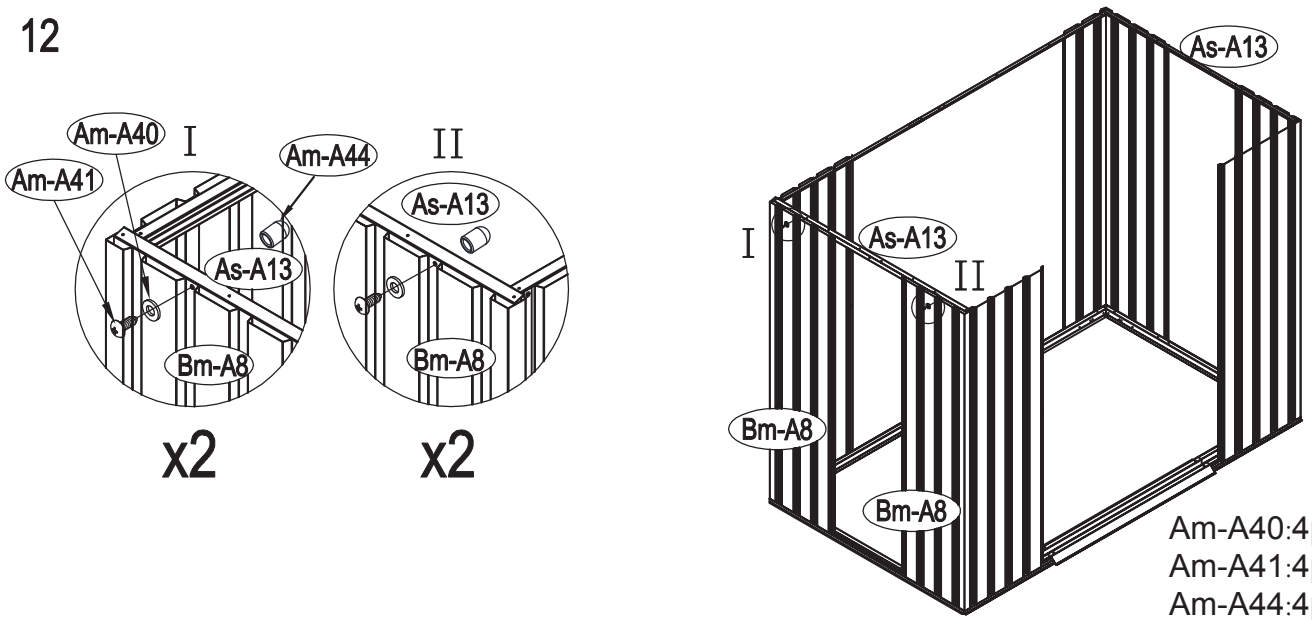

Am-A40:4pcs
Am-A41:4pcs
Am-A44:4pcs

13

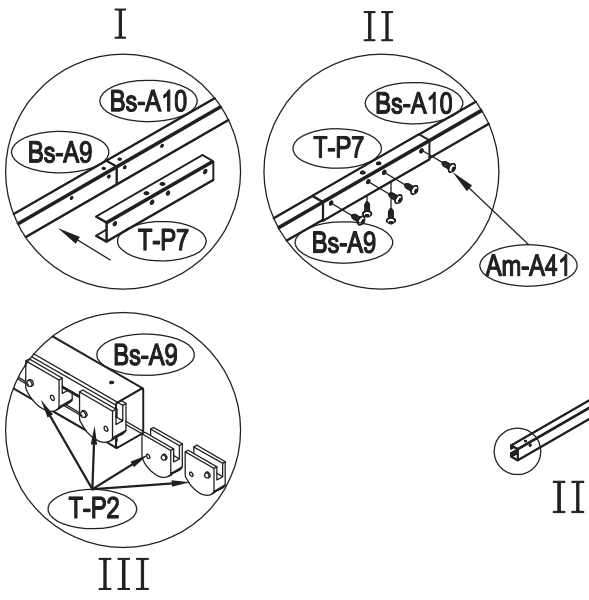

Am-A41:6pcs
T-P2:4pcs

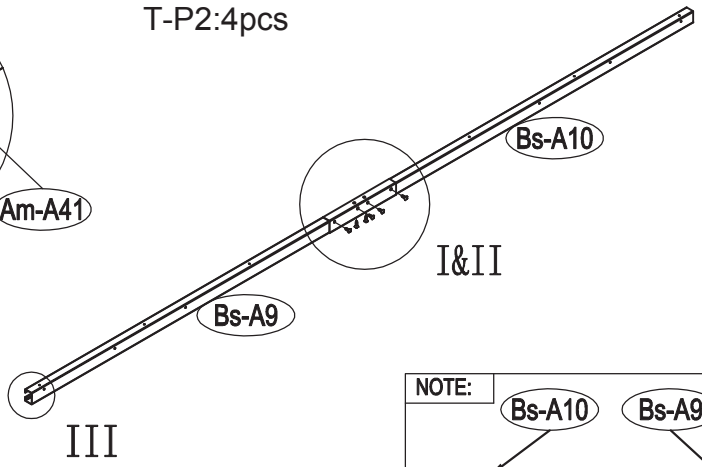

NOTE:

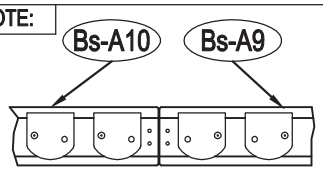

14

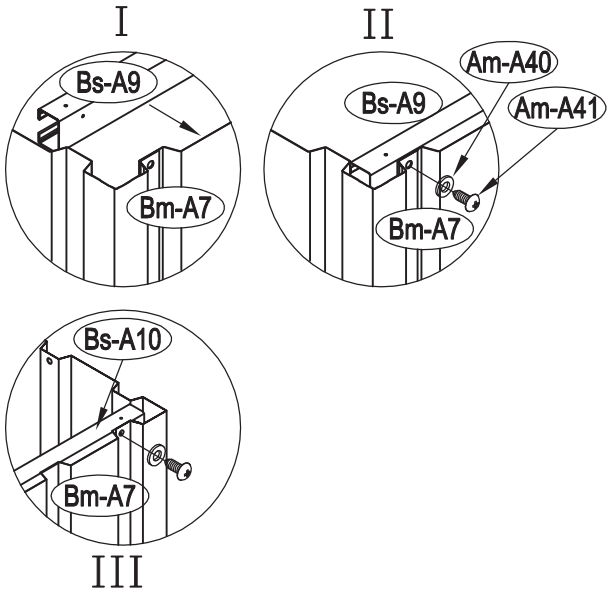

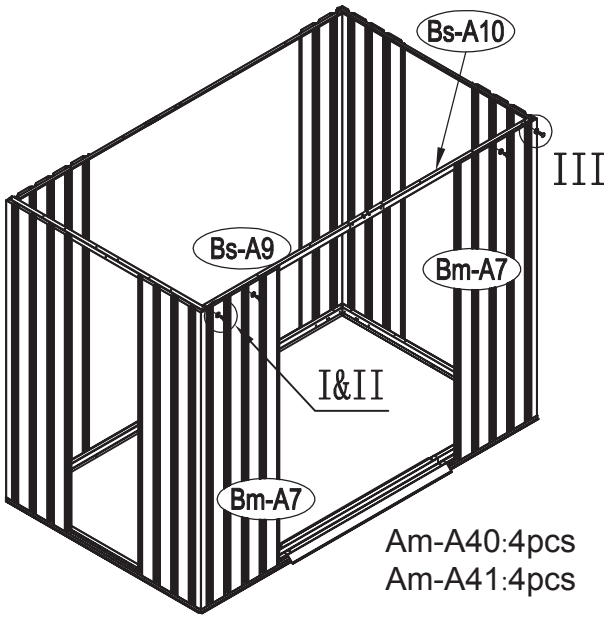

Am-A40:4pcs
Am-A41:4pcs

15

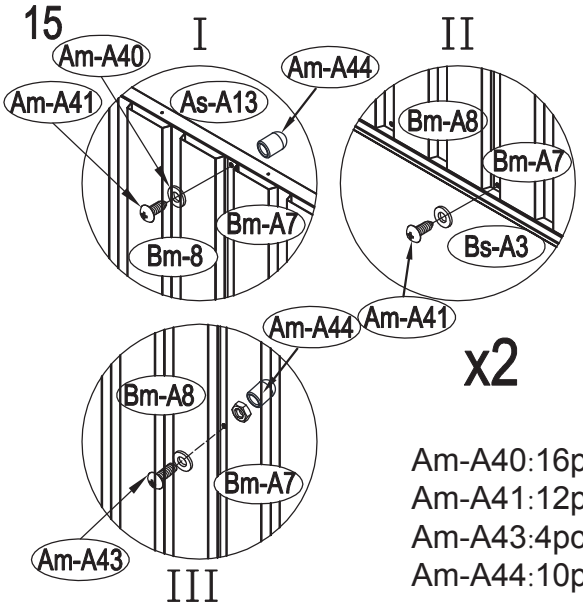

x2

Am-A40:16pcs
Am-A41:12pcs
Am-A43:4pcs
Am-A44:10pcs

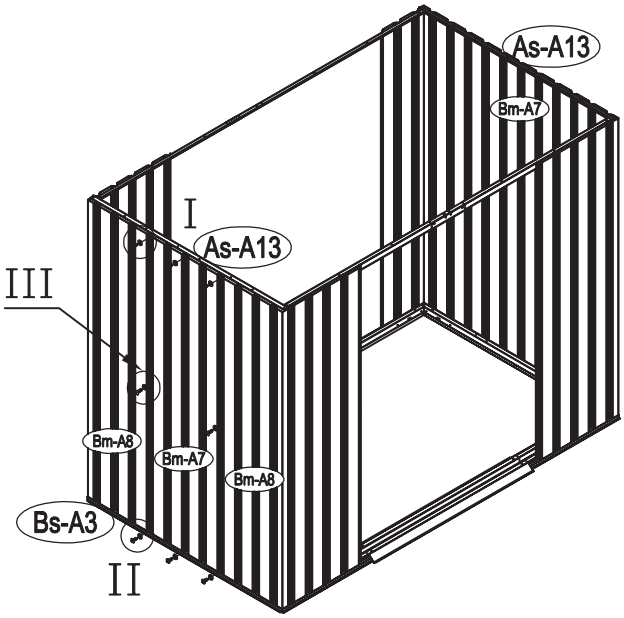

16

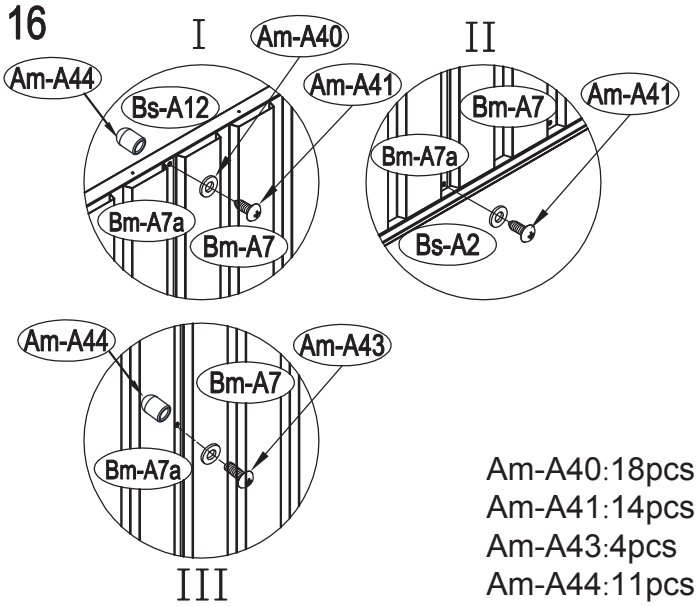

Am-A40:18pcs
Am-A41:14pcs
Am-A43:4pcs
Am-A44:11pcs

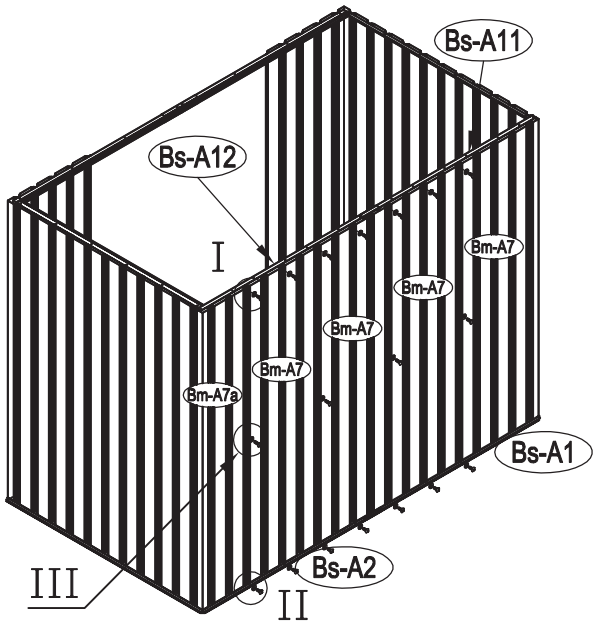

17

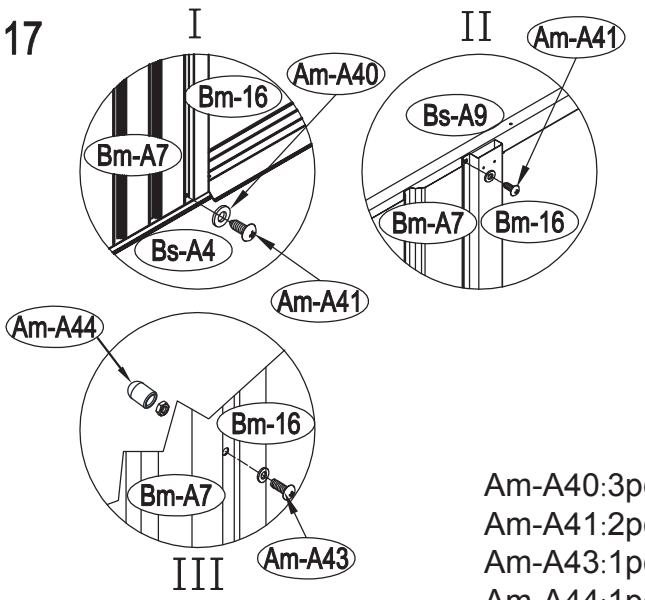

Am-A40:3pcs
Am-A41:2pcs
Am-A43:1pc
Am-A44:1pc

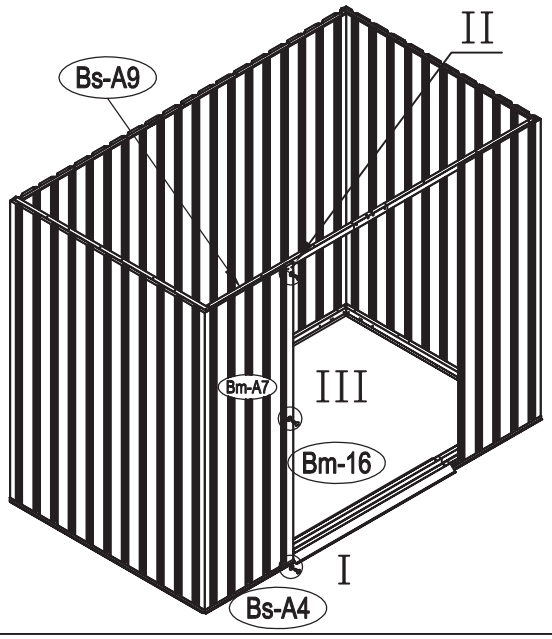

18

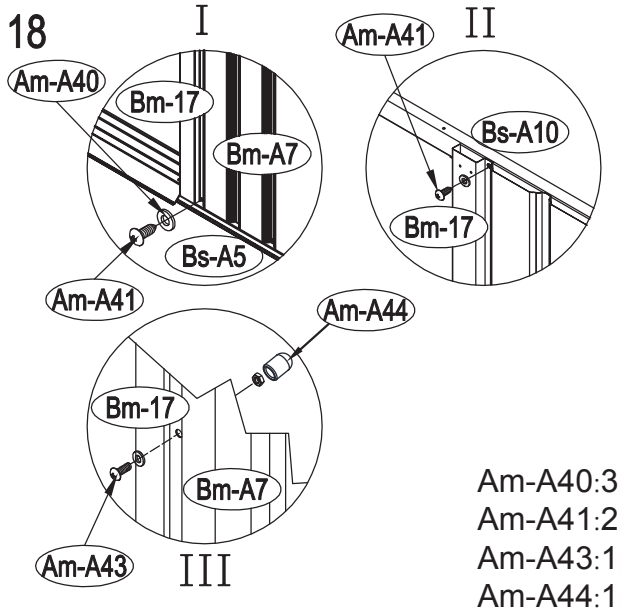

Am-A40:3pcs
Am-A41:2pcs
Am-A43:1pc
Am-A44:1pc

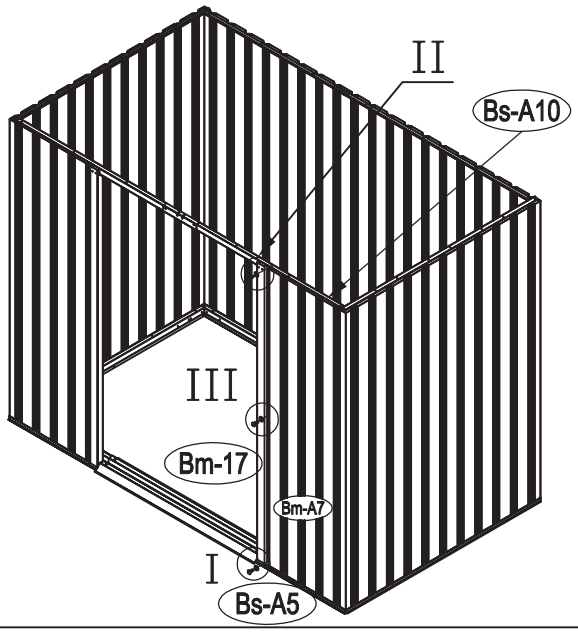

19

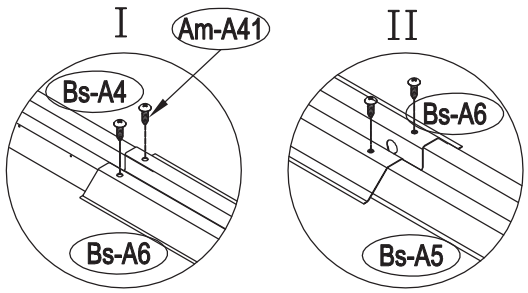

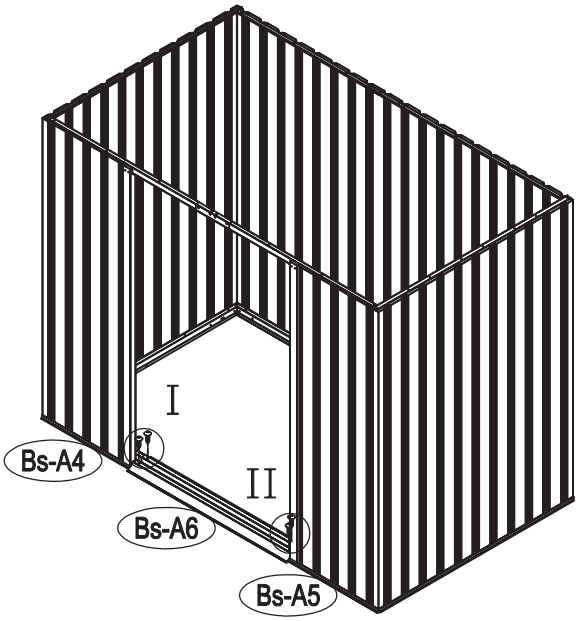

Am-A41:4pcs

20

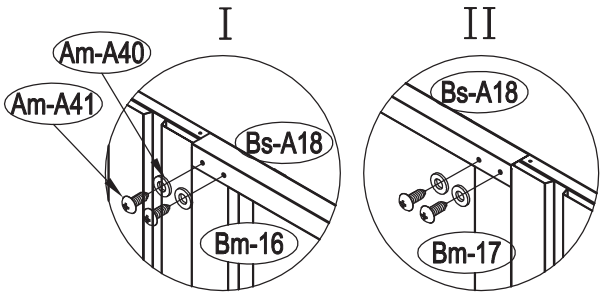

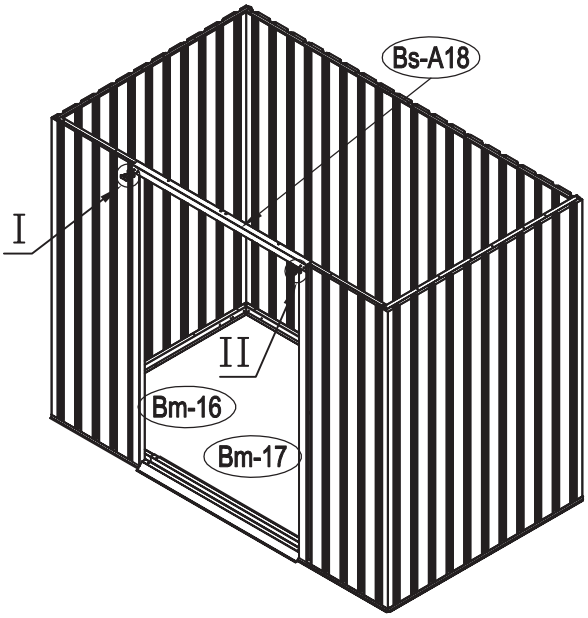

Am-A40:4pcs
Am-A41:4pcs

21

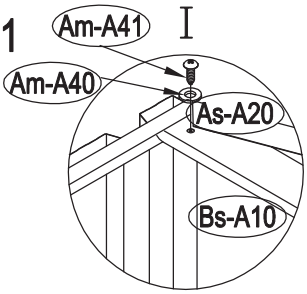

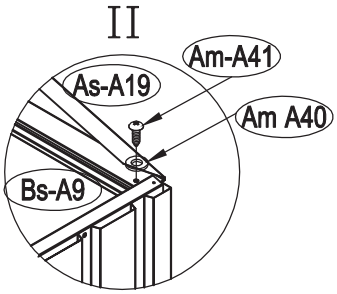

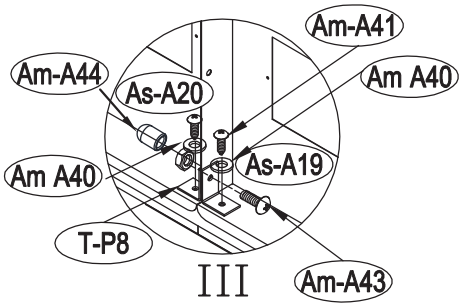

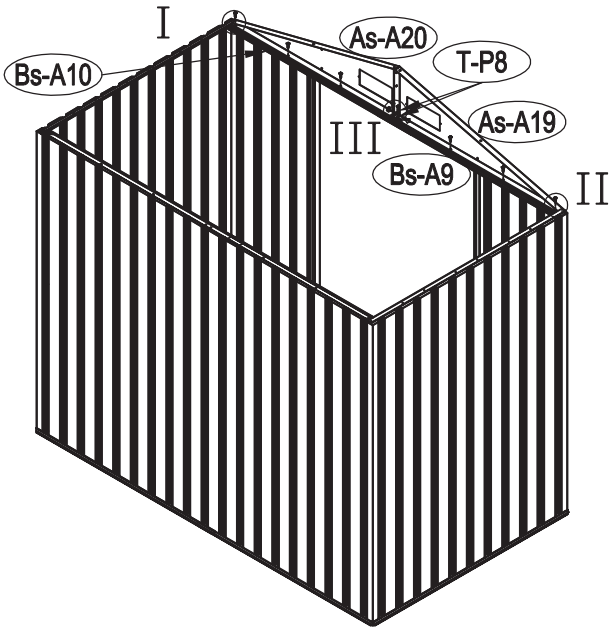

Am-A40:8pcs
Am-A41:8pcs
Am-A43:1pc
Am-A44:1pc

22

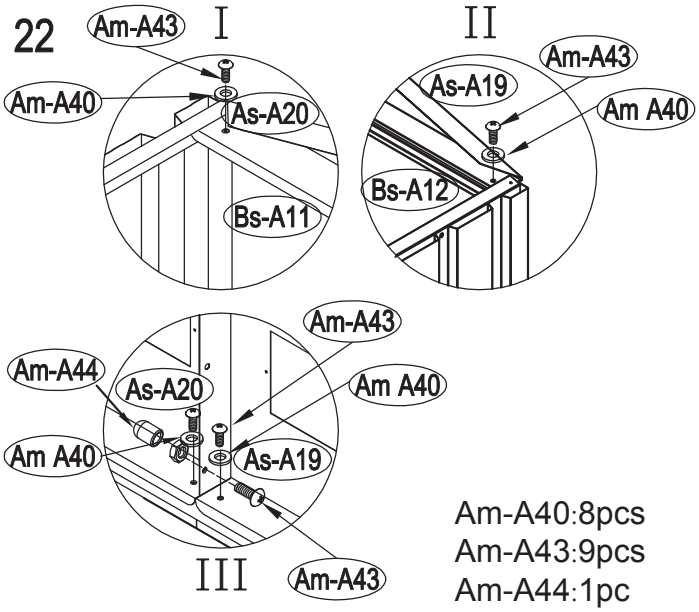

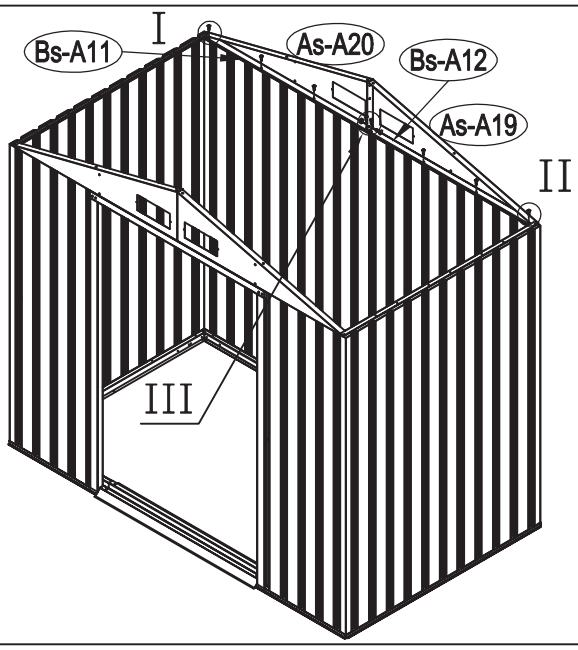

Am-A40:8pcs
Am-A43:9pcs
Am-A44:1pc

23

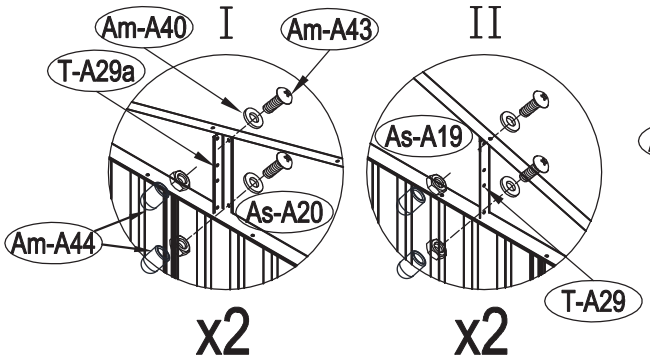

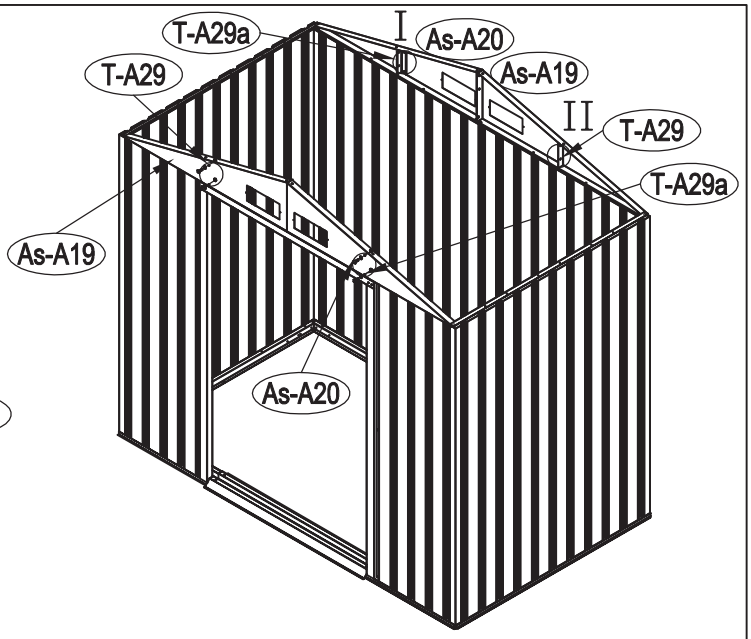

Am-A40:8pcs
Am-A43:8pcs
Am-A44:8pcs

24

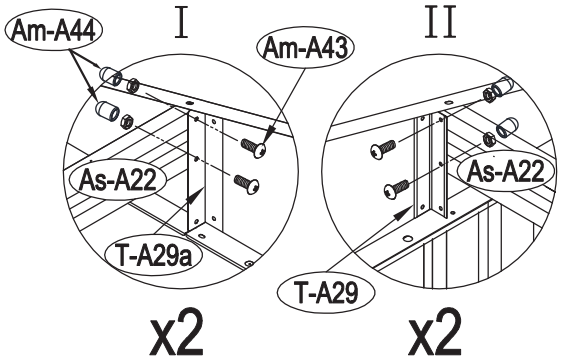

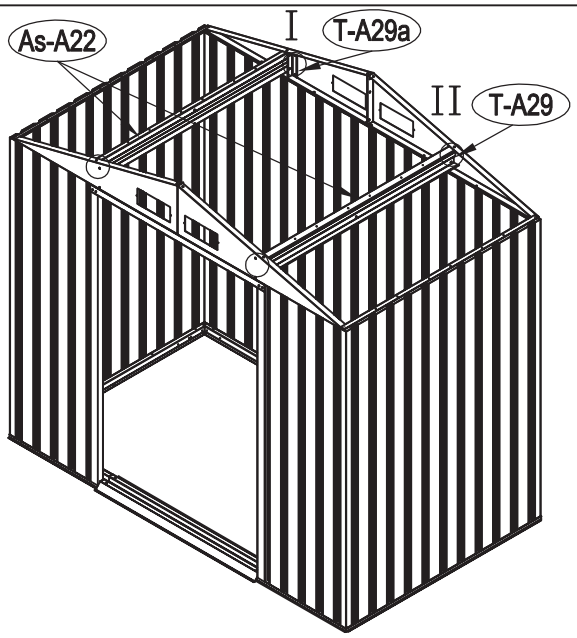

Am-A43:8pcs
Am-A44:8pcs

25

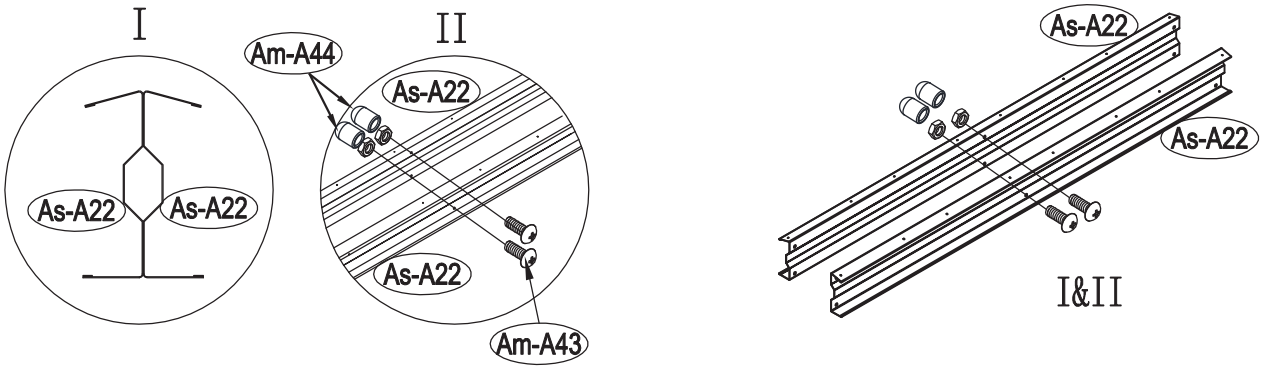

Am-A43:2pcs
Am-A44:2pcs

26

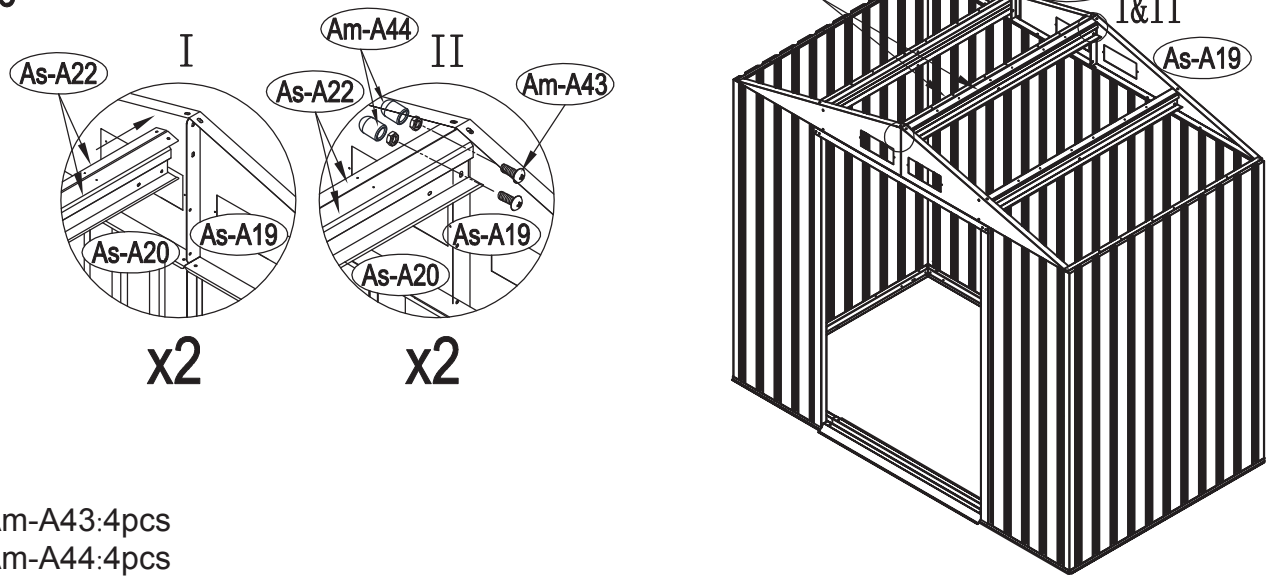

Am-A43:4pcs
Am-A44:4pcs

27

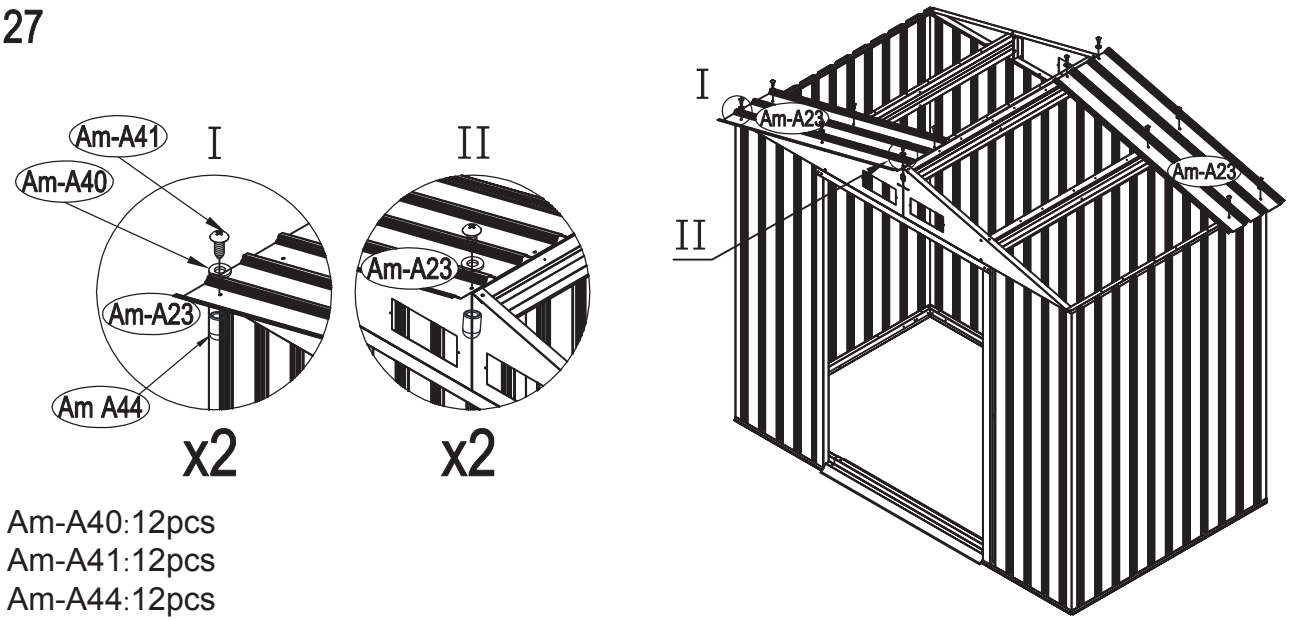

Am-A40:12pcs
Am-A41:12pcs
Am-A44:12pcs

28

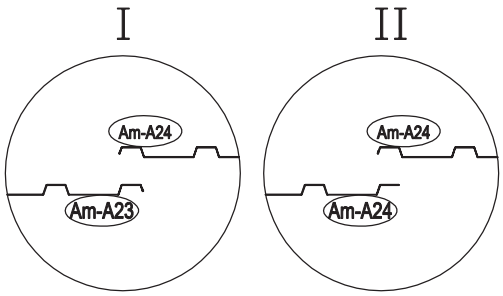

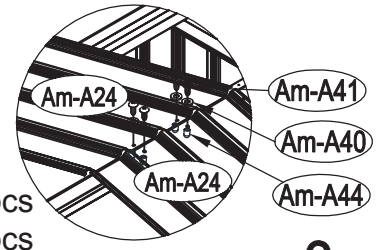

III

x2

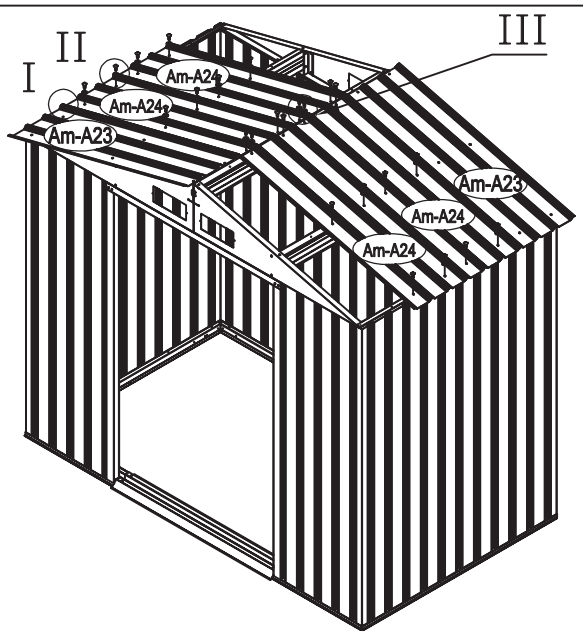

Am-A40:24pcs
Am-A41:24pcs
Am-A44:24pcs

29

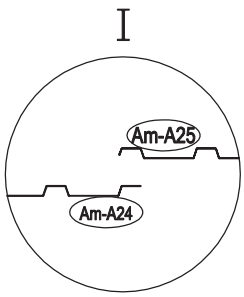

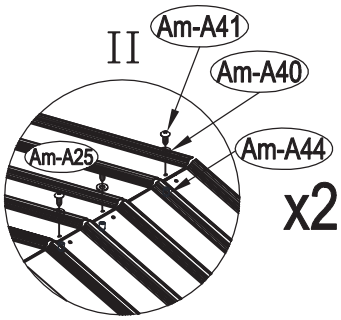

x2

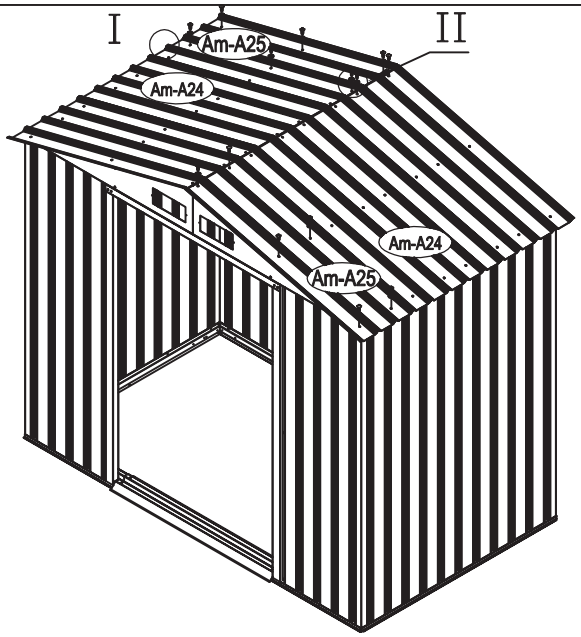

Am-A40:12pcs
Am-A41:12pcs
Am-A44:12pcs

30

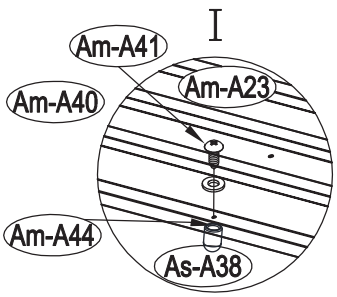

x2

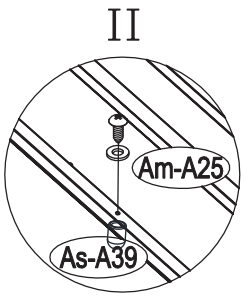

x2

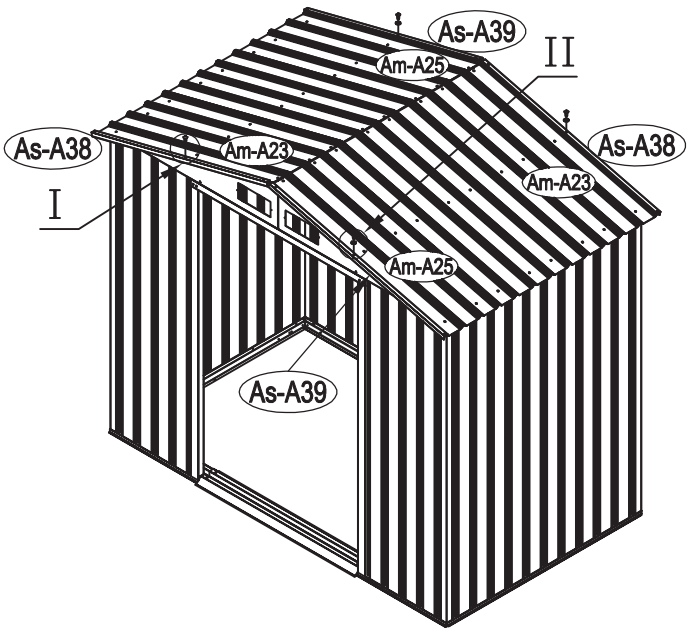

Am-A40:4pcs
Am-A41:4pcs
Am-A44:4pcs

31

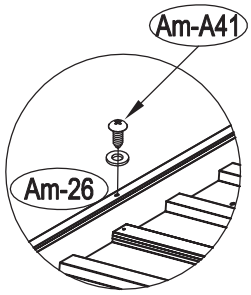

x2

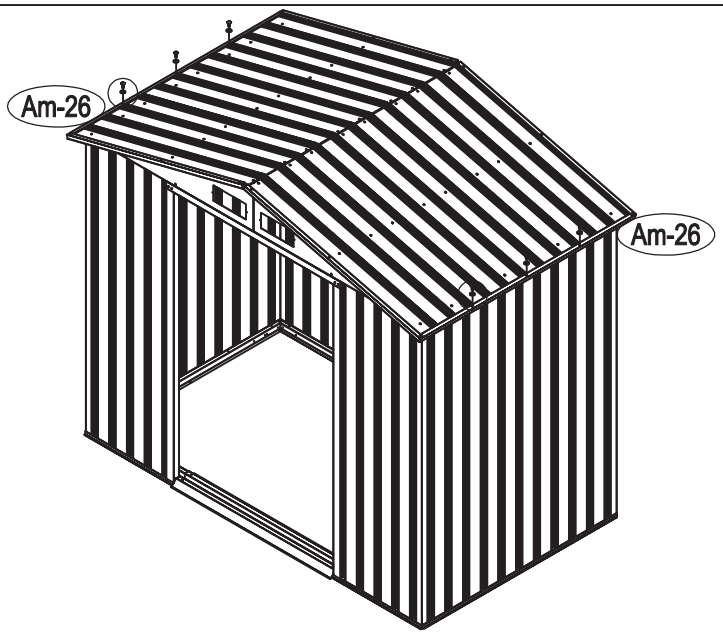

Am-A40:6pcs
Am-A41:6pcs

32

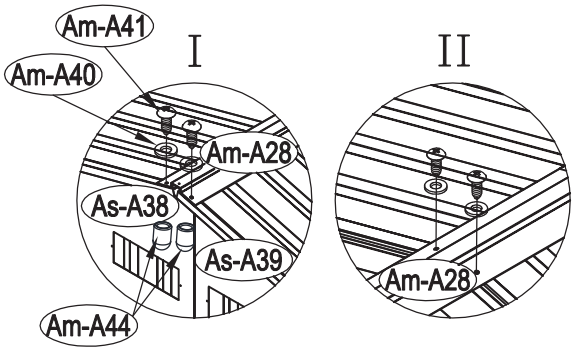

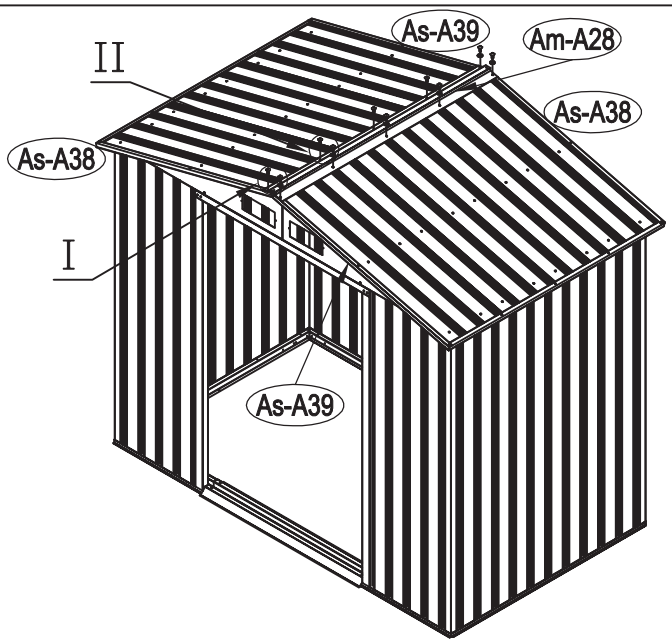

Am-A40:10pcs
Am-A41:10pcs
Am-A44:10pcs

33

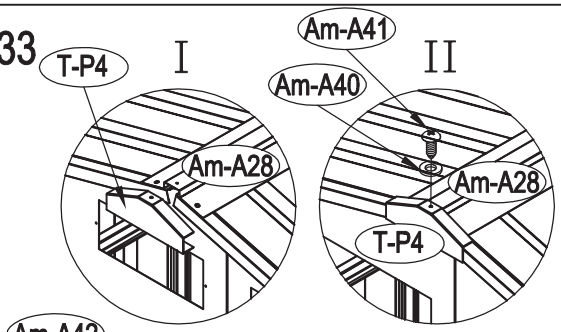

x2

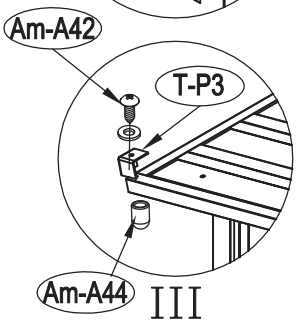

x4

Am-A40:6pcs
Am-A41:2pcs
Am-A42:4pcs
Am-A44:4pcs
T-P3:4pcs
T-P4:2pcs

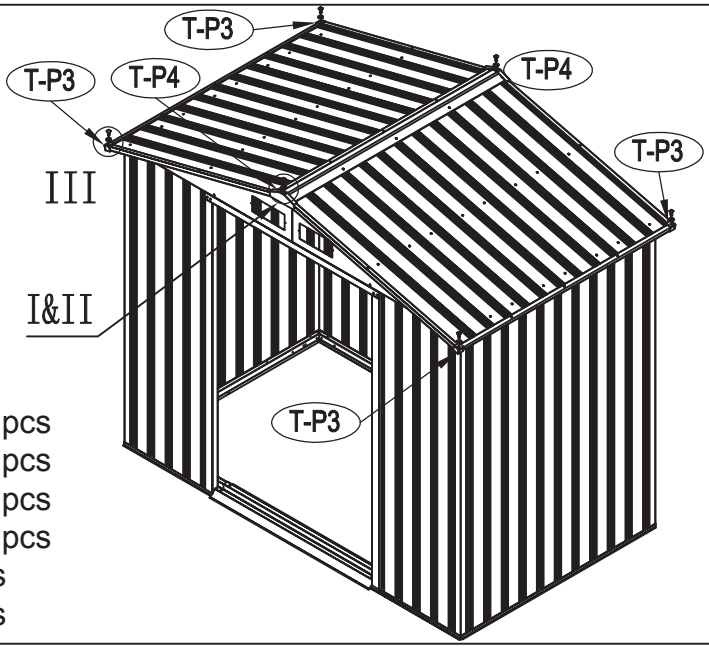

34

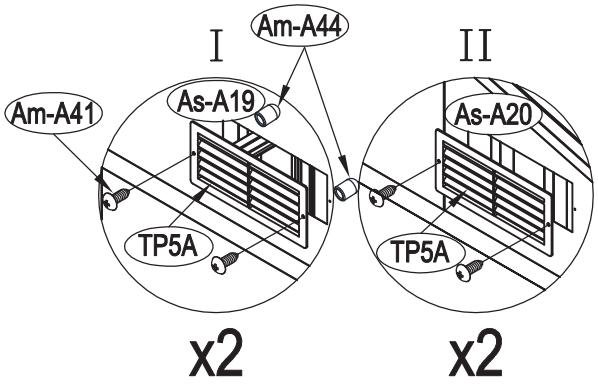

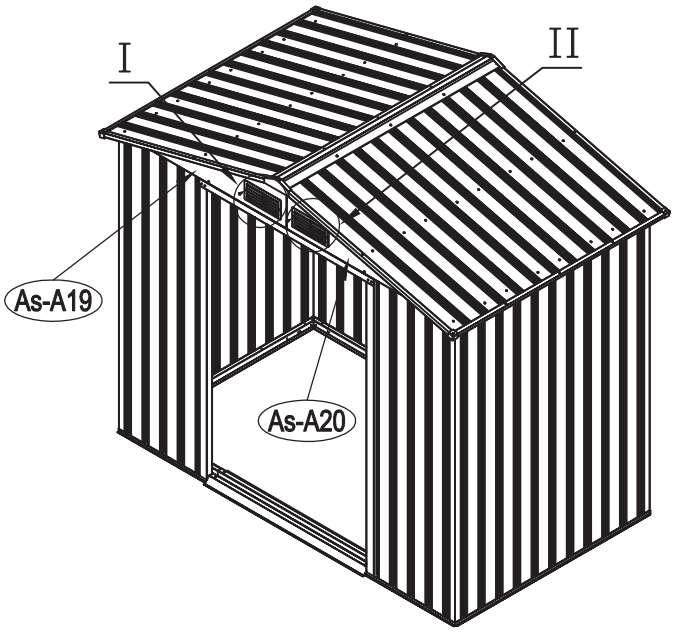

Am-A41:8pcs
Am-A44:8pcs

DOOR /PUERTA

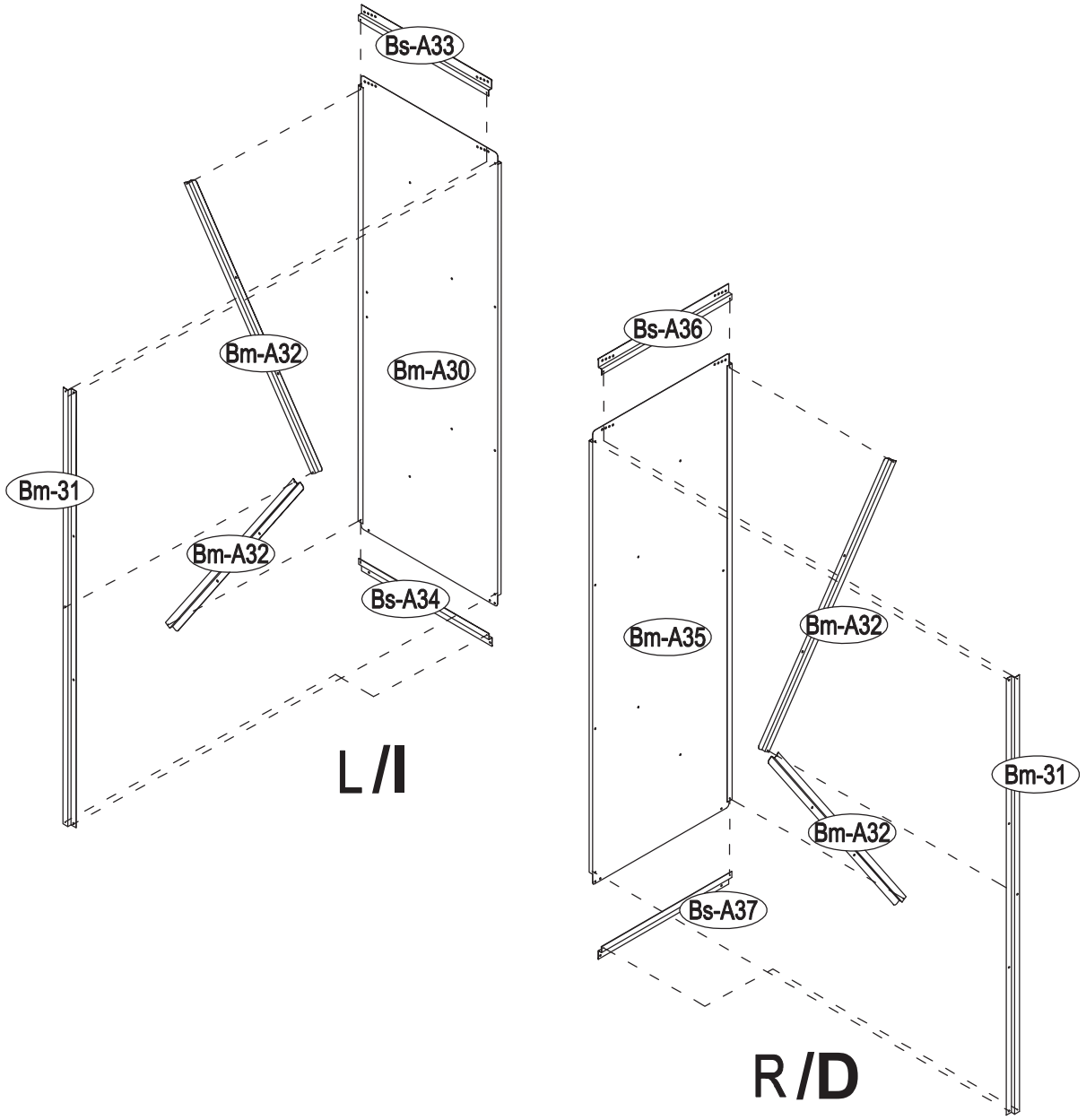
Bs-A33
Bm-A32
Bm-A30
Bm-31
Bm-A32
Bs-A34
L /I
Bs-A36
Bm-A35
Bm-A32
Bm-31
Bm-A32
Bs-A37
R /D

1

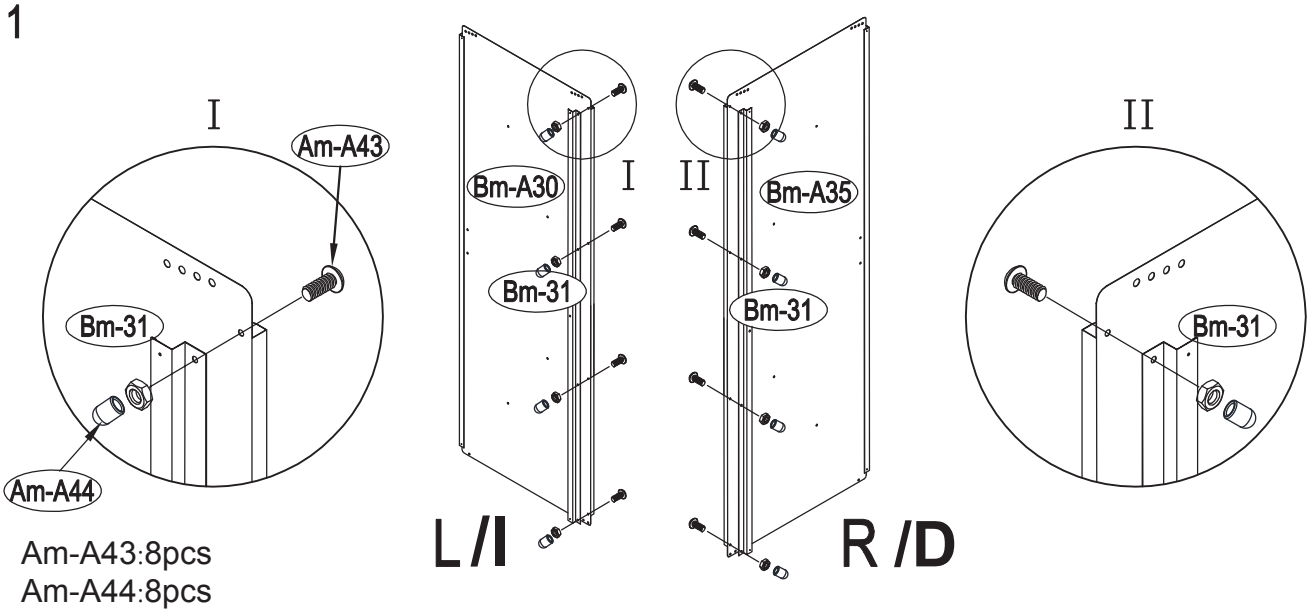

Am-A43:8pcs
Am-A44:8pcs

2

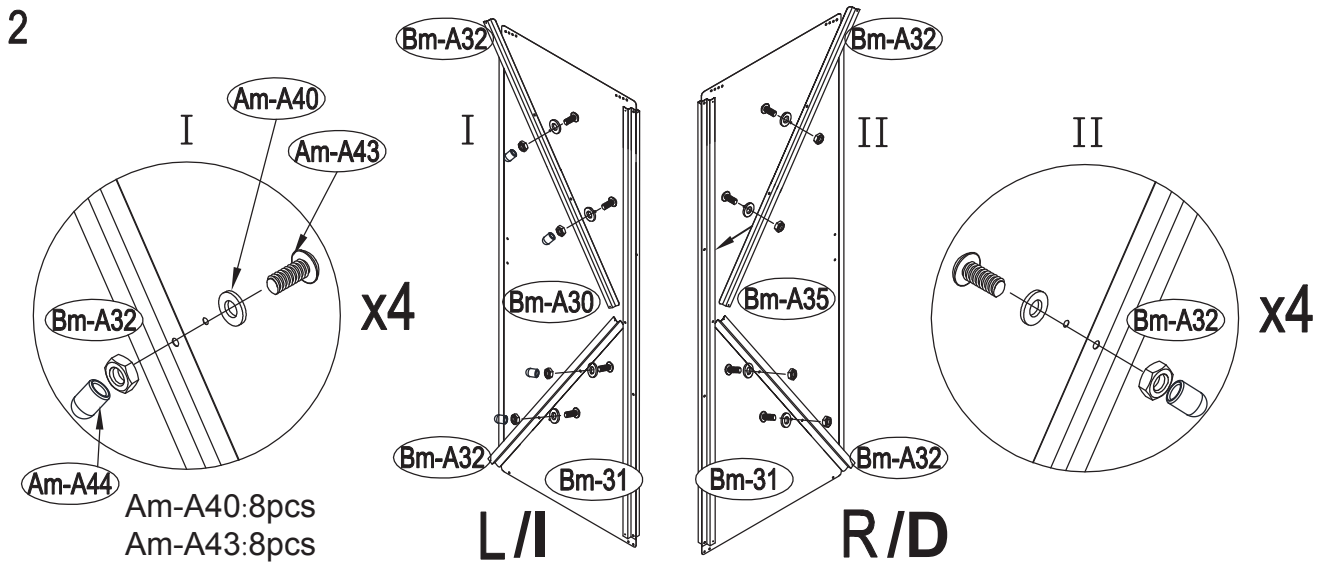

Am-A40:8pcs
Am-A43:8pcs
Am-A44:8pcs

3

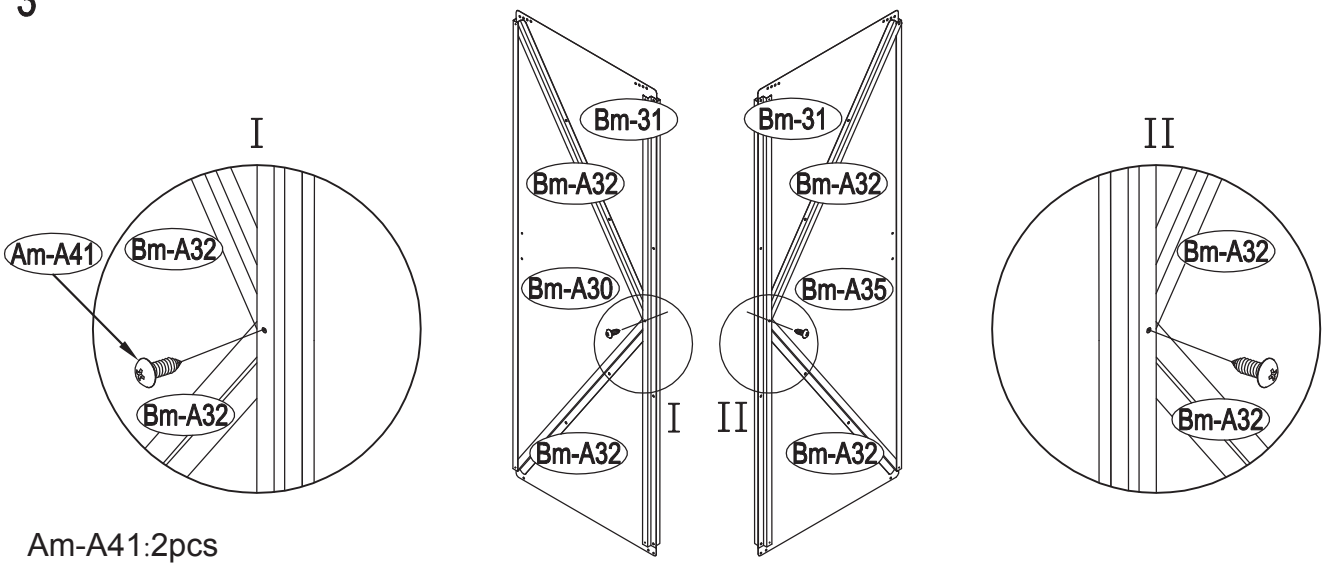

Am-A41:2pcs

4

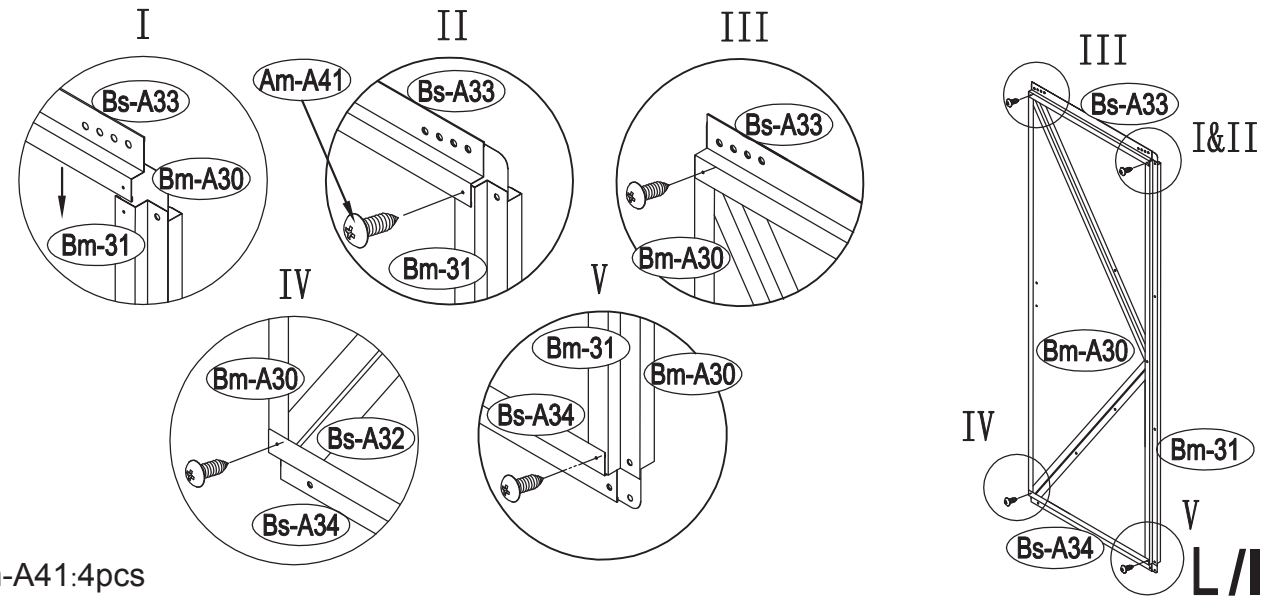

Am-A41:4pcs

5

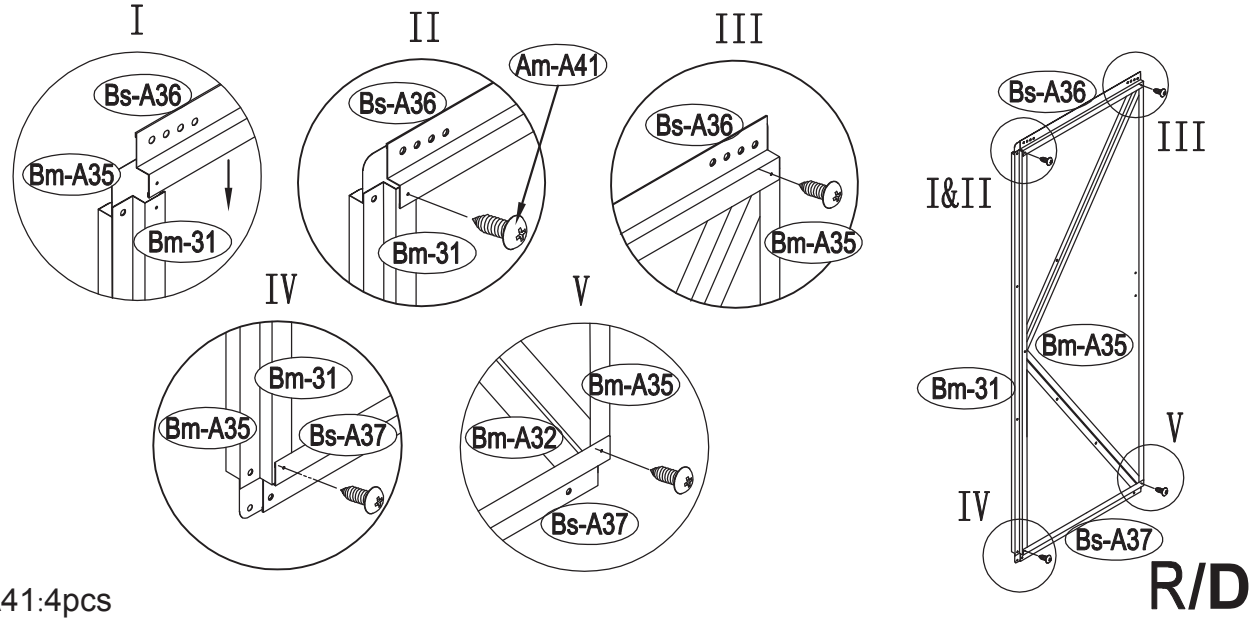

Am-A41:4pcs

6

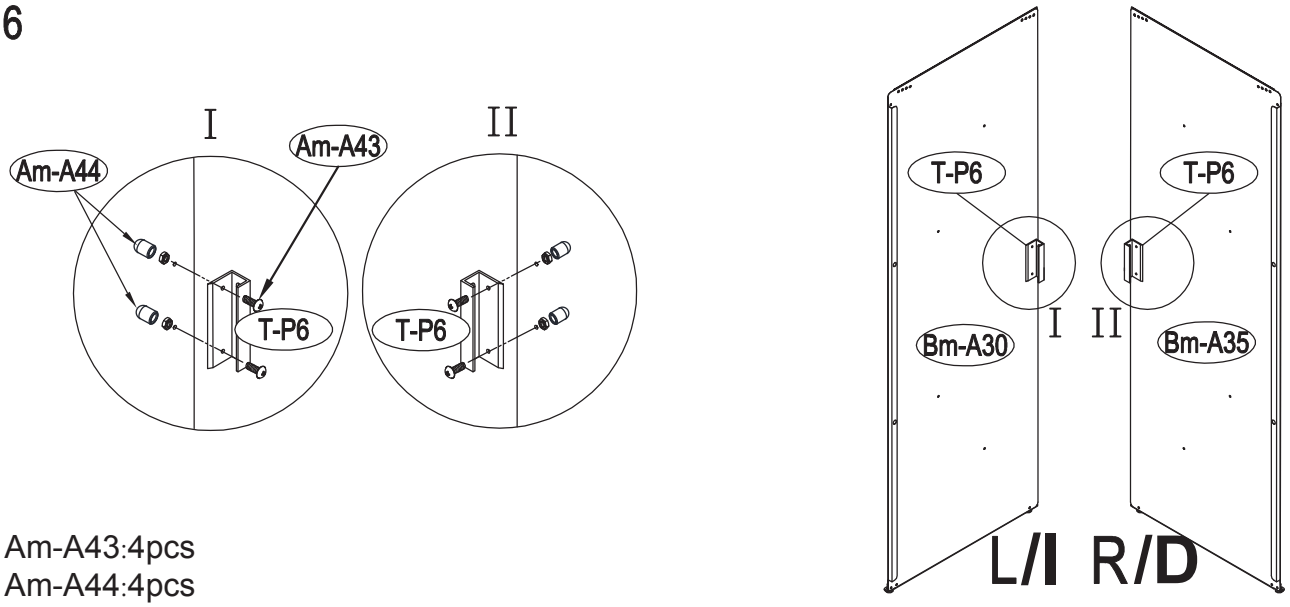

Am-A43:4pcs
Am-A44:4pcs

7

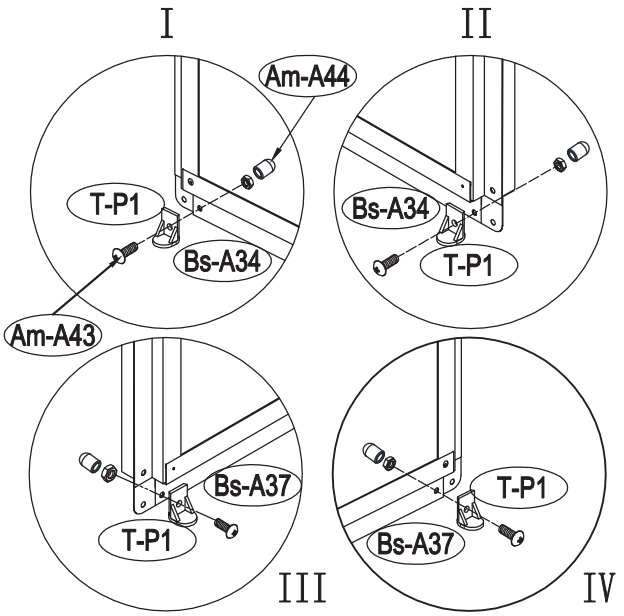

Am-A43:4pcs
Am-A44:4pcs
T-P1:4pcs

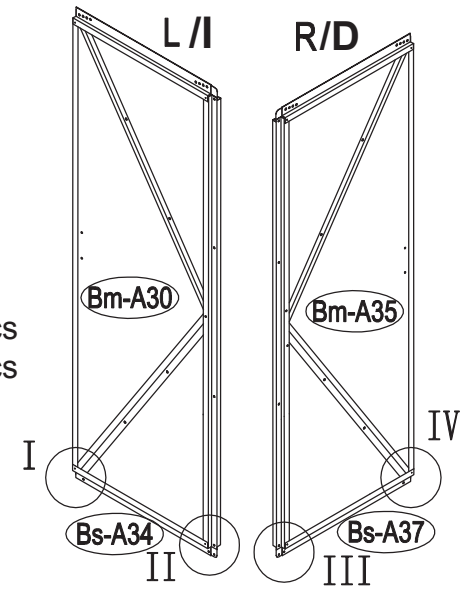

8

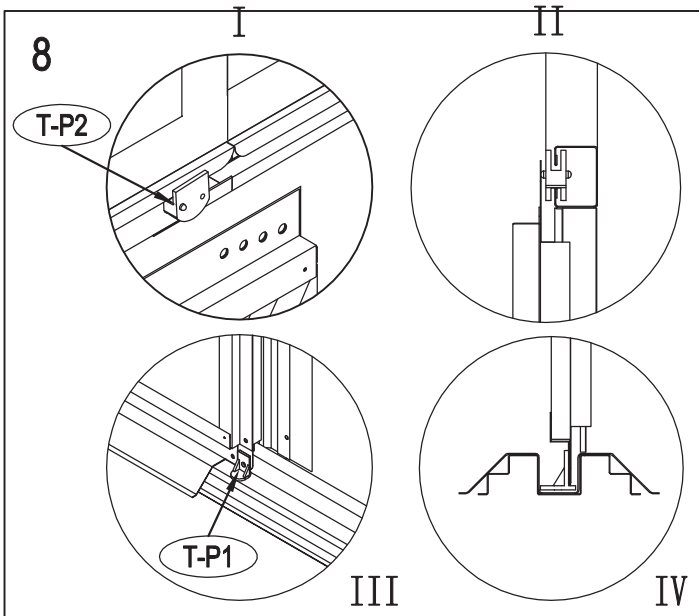

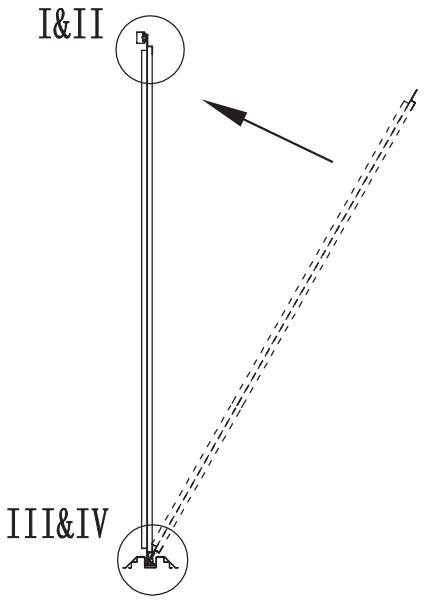

9

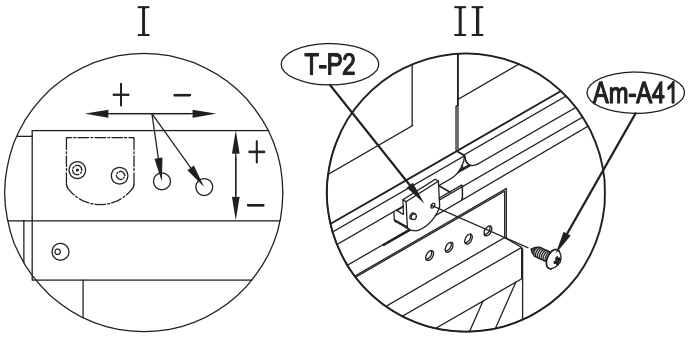

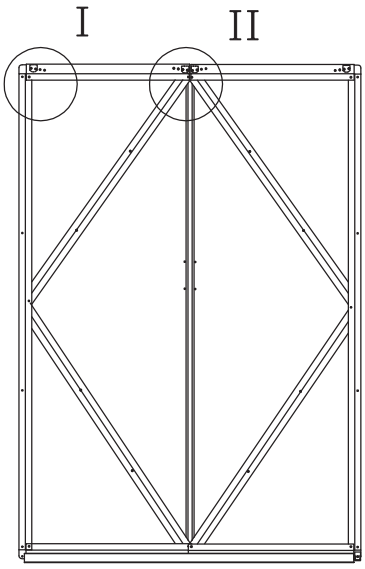

Am-A41:4pcs

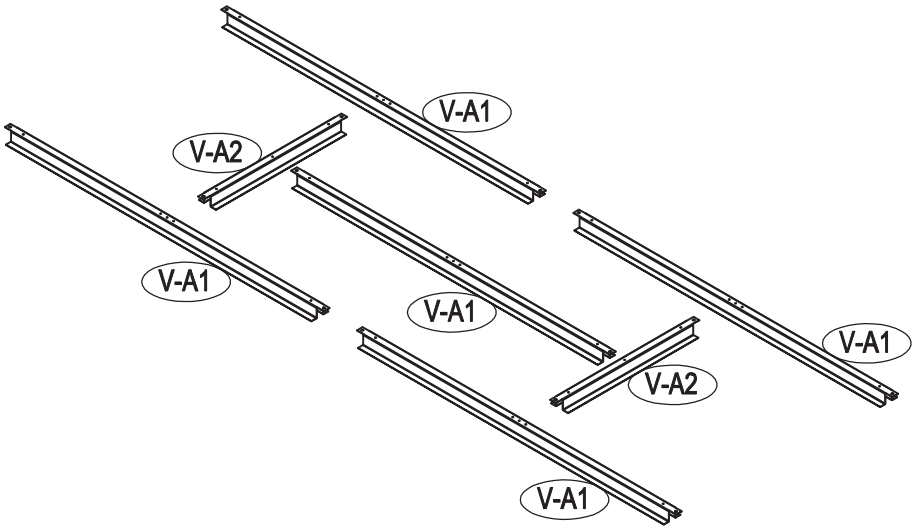
V-A1
V-A2
V-A1
V-A1
V-A1
V-A2
V-A1

1

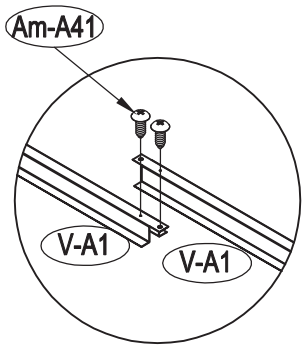

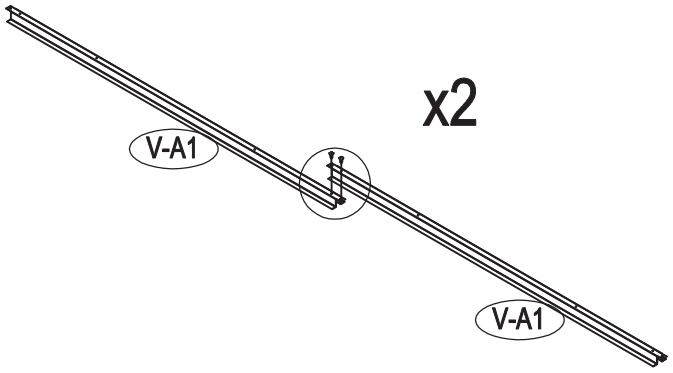

Am-A41:4pcs

2

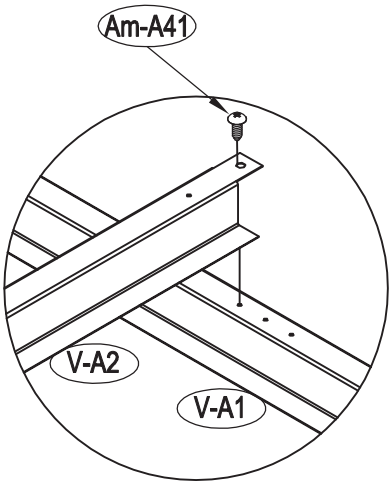

x4

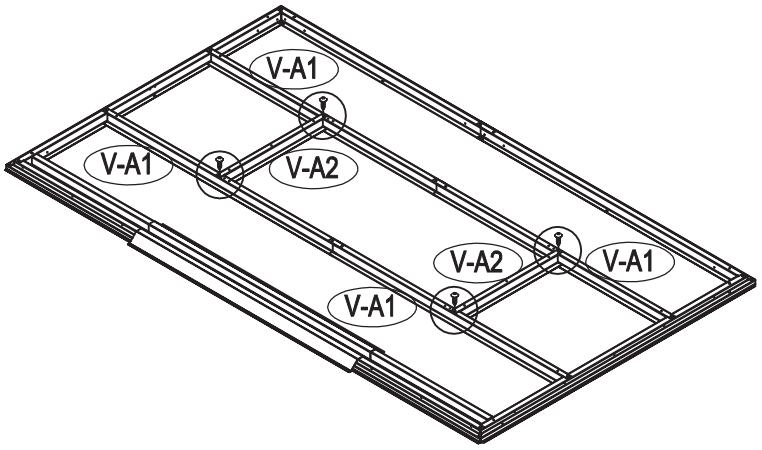

Am-A41:4pcs

3

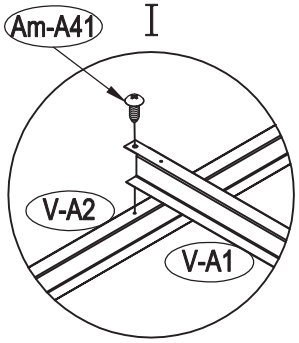

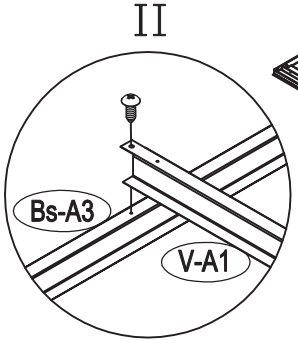

x2

x4

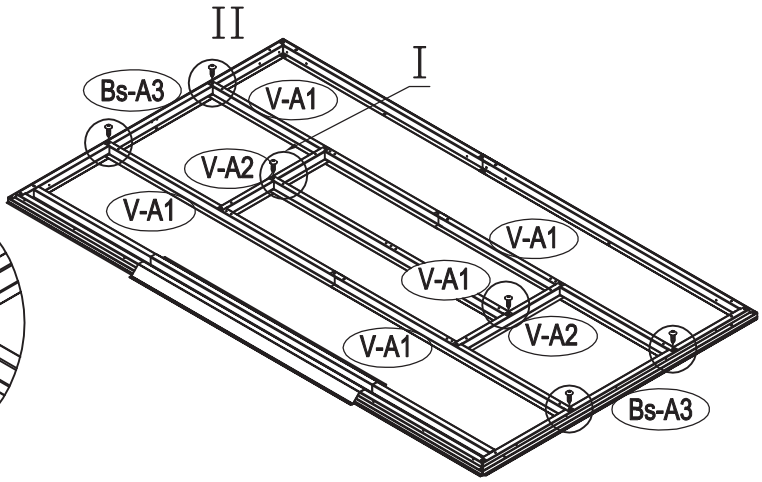

Am-A41:6pcs