COLOS

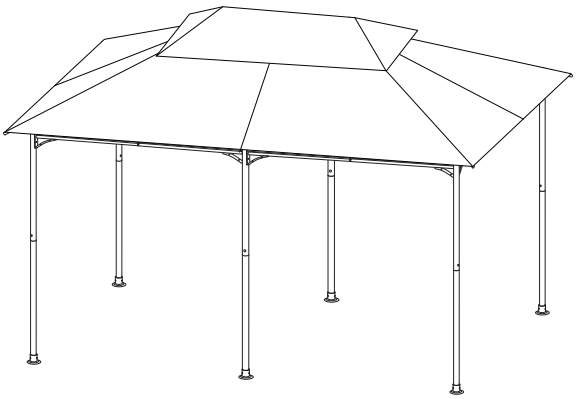

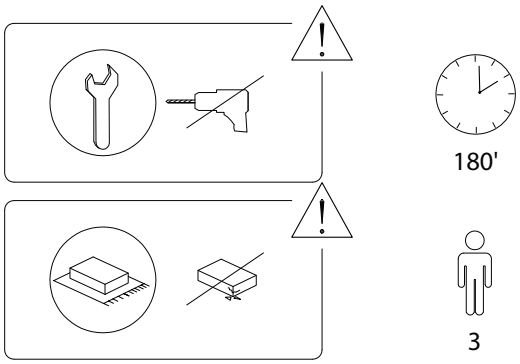
180'
3

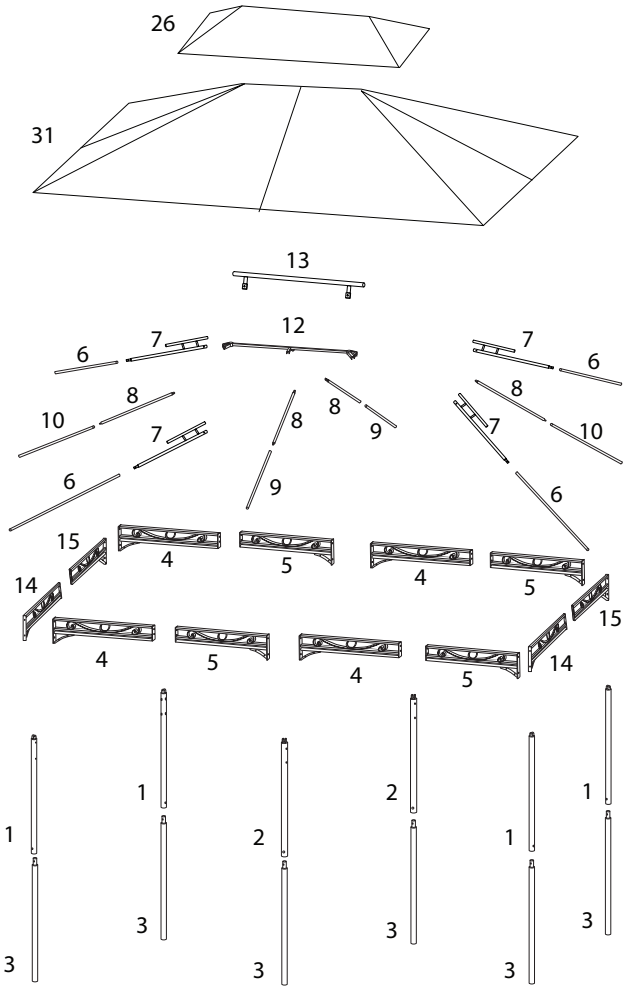
26
31
13
12
6
7
8
10
9
15
14
4
5
1
2
3

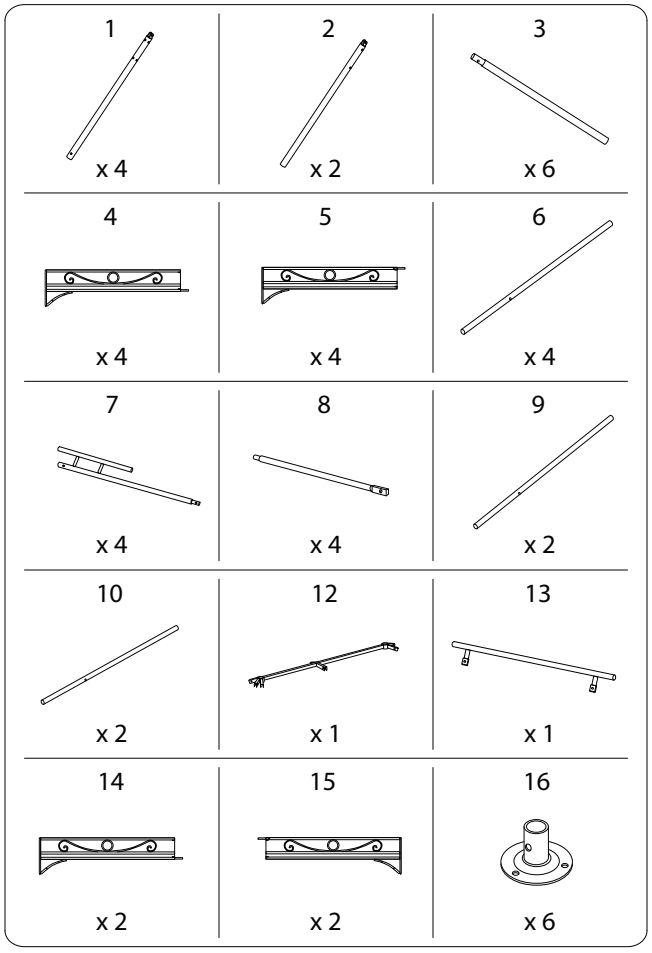
1
x 4
2
x 2
3
x 6
4
x 4
5
x 4
6
x 4
7
x 4
8
x 4
9
x 2
10
x 2
12
x 1
13
x 1
14
x 2
15
x 2
16
x 6

17	18	19
x 18	M6 x 45 x 12	M6 x 30 x 10
21	**22**	**23**
M6 x 15 x 24	M6 x 10 x 12	x 34
24	**25**	**26**
x 2	x 6	x 1
27	**28**	**29**
x 2	x 2	x 2
30	**31**	
x 40	x 1	

1 x 2

14	15	22	23	24
x 1	x 1	M6 x 10 x 2	x 2	x 2

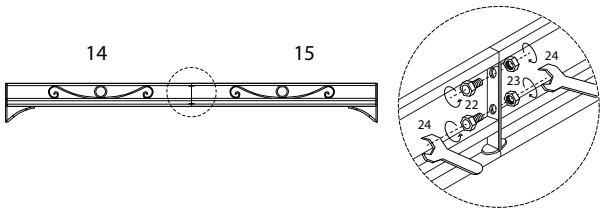

2 x 4

4	5	22	23	24
x 1	x 1	M6 x 10 x 2	x 2	x 2

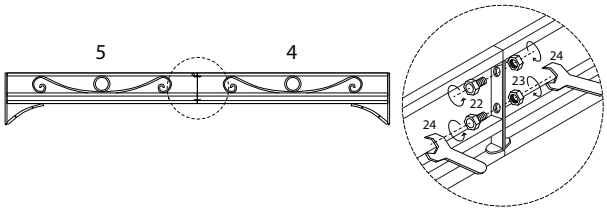

3

1	2	21	24
x 4	x 2	M6 x 15 x 24	x 1

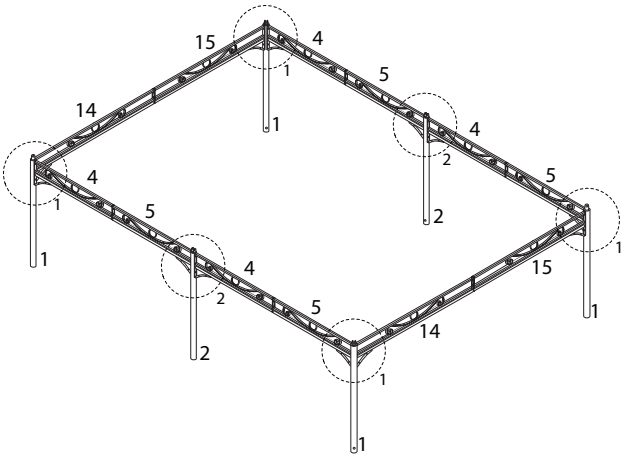

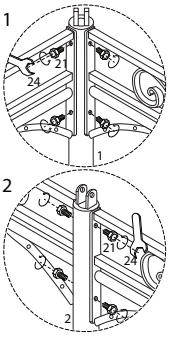

4 x 2

8	9	10
x 2	x 1	x 1

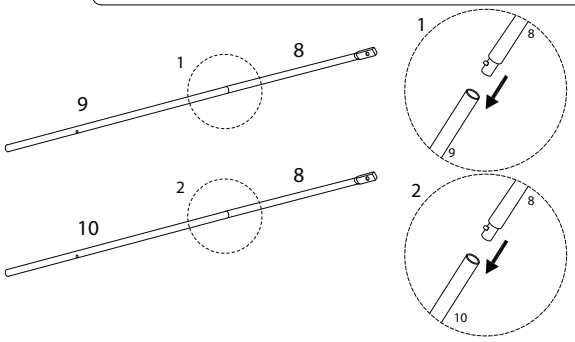

5 x 4

6	7
x 1	x 1

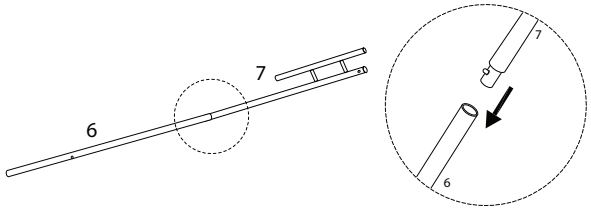

6

12	13	19	23	24
x 1	x 1	M6 x 30 x 2	x 2	x 2

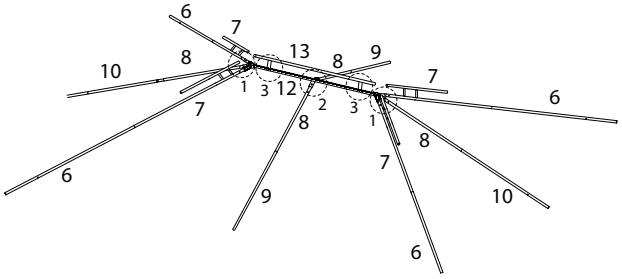

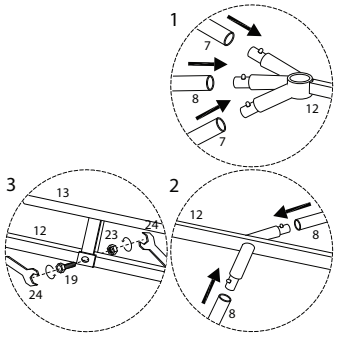

7

19	23	24
M6 x 30 x 8	x 8	x 2

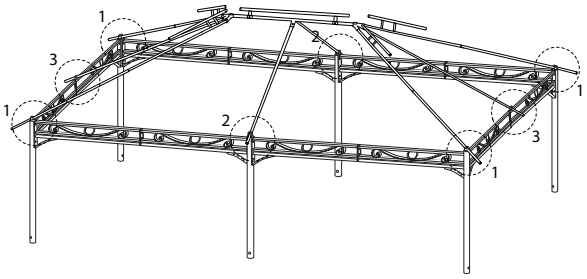

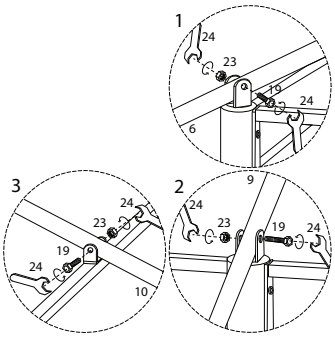

8

26	31
x 1	x 1

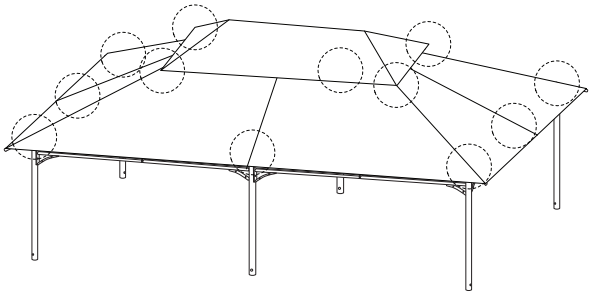

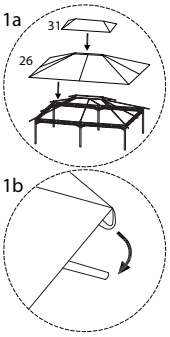

9

3	18	23	24
x 6	M6 x 45 x 6	x 6	x 2

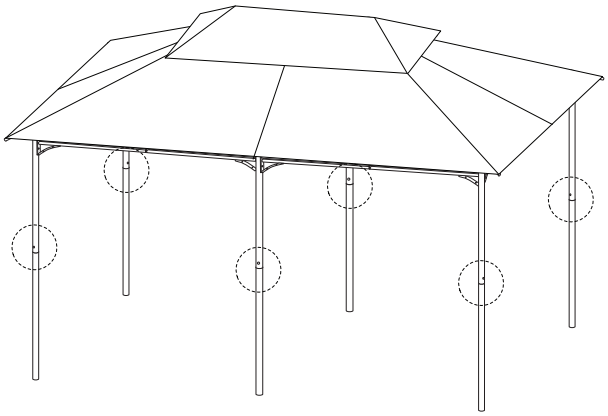

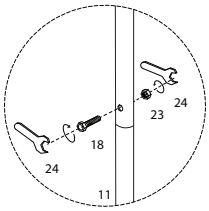

10

16	18	23	24
x 6	M6 x 45 x 6	x 6	x 2

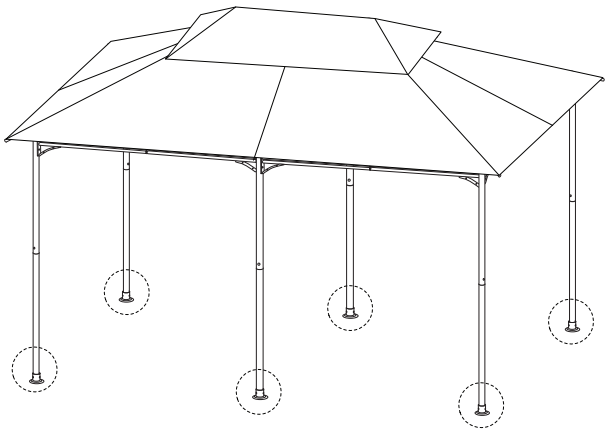

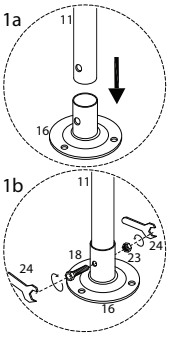

11

17
x 12

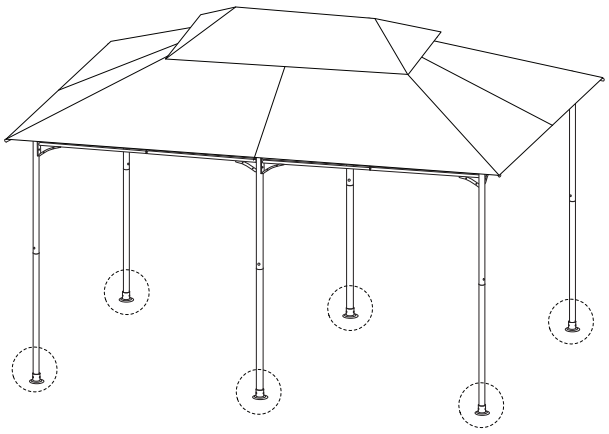

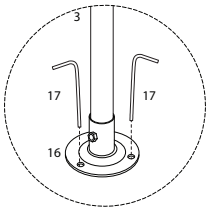

12

27	28	29	30
x 2	x 2	x 2	x 40

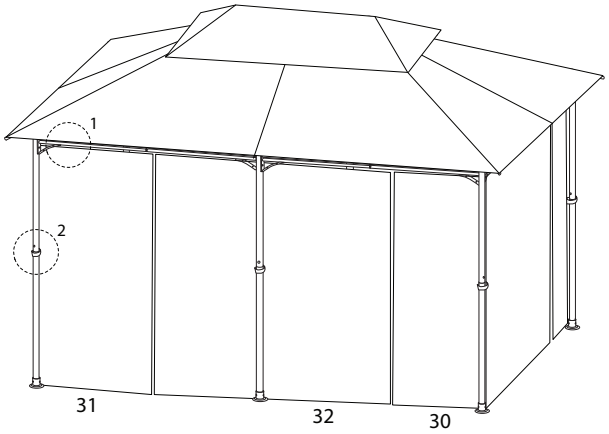

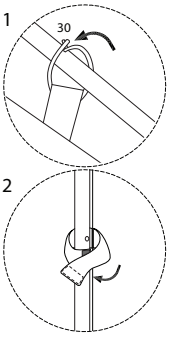

13

17	25
x 6	x 6

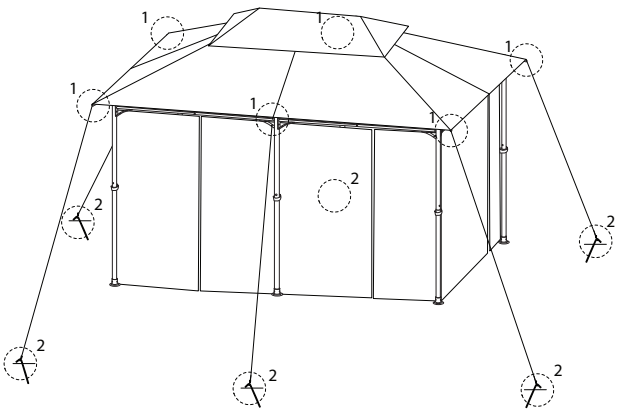

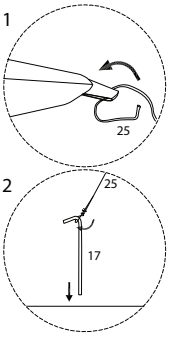

!

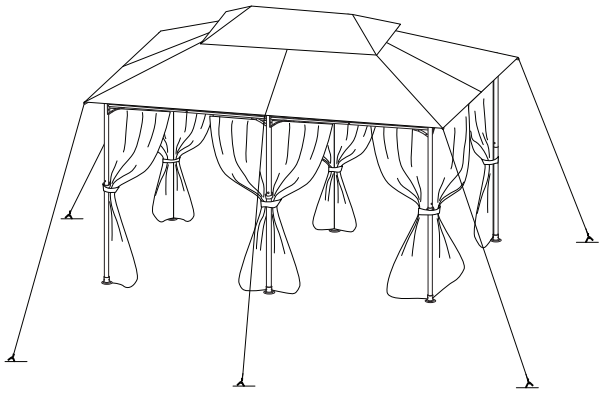

1247/COLOS/040924/