TEVIOT

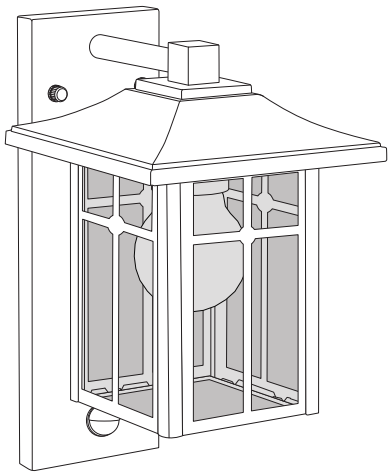

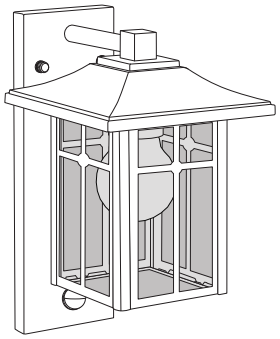

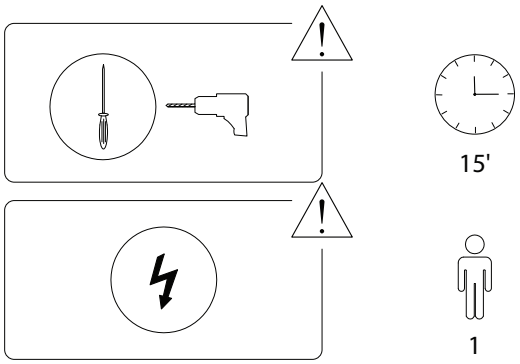

Beliani

Beliani
2024/TEVIOT/131023/

A

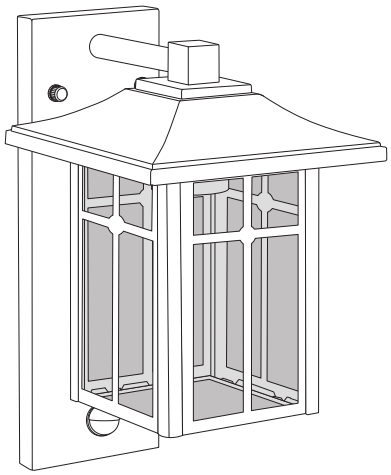

A	B	C
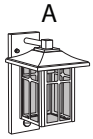		
x 1	x 2	x 2

Beliani
2024/TEVIOT/131023/

1

A

x 1

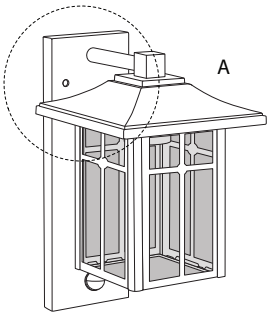

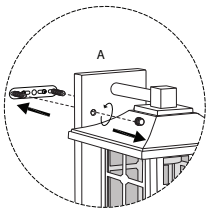

2

B

x 2

C

x 2

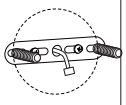

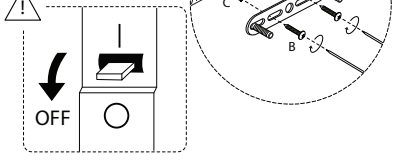

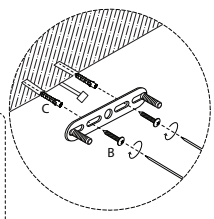

Beliani
2024/TEVIOT/131023/

3

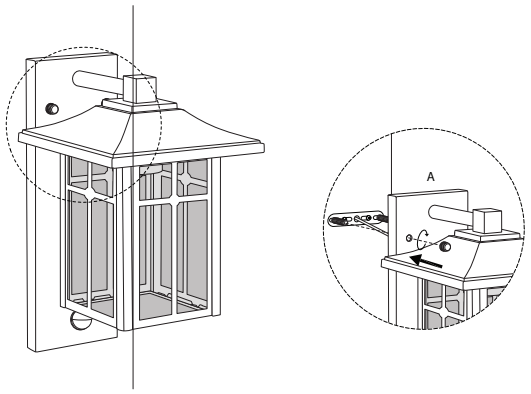

4

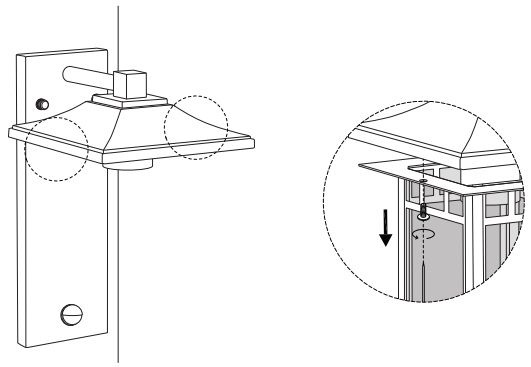

Beliani
2024/TEVIOT/131023/

5

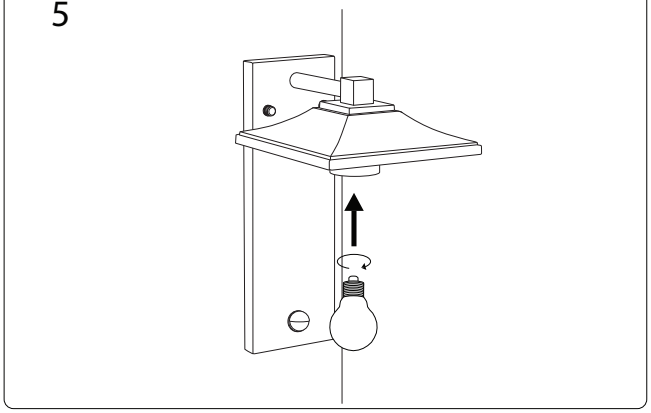

6

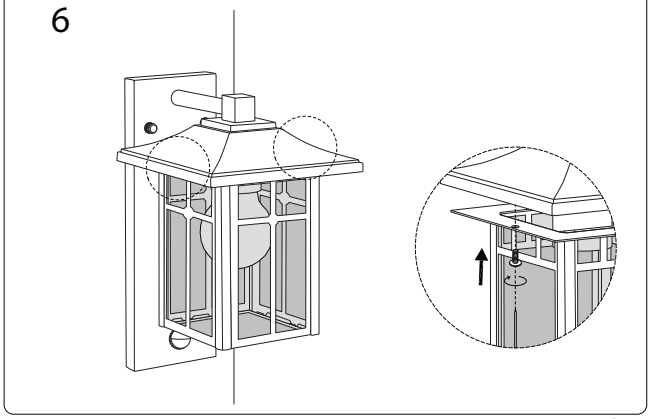

Beliani
2024/TEVIOT/131023/