OLBIA

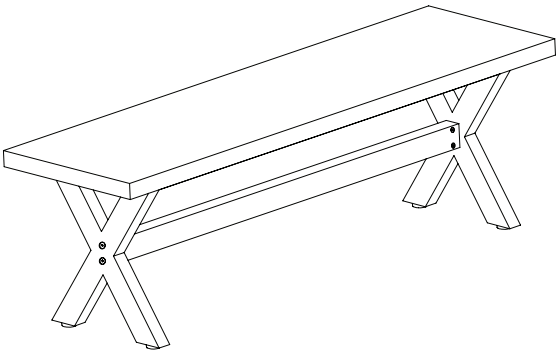

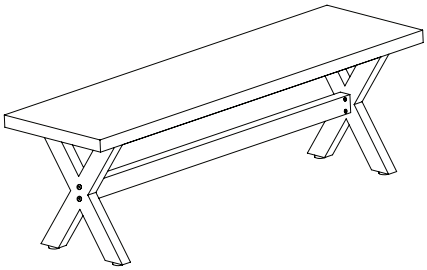

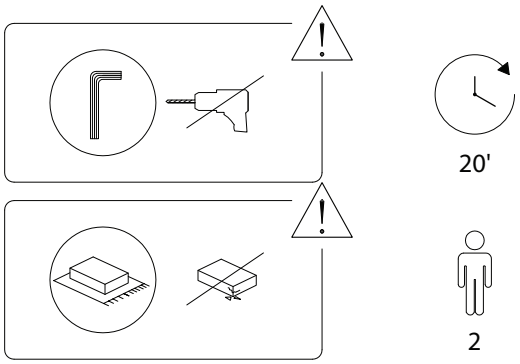

1305/OLBIA/110225/

A	B	C	D
x 2	x 1	x 1	x 1

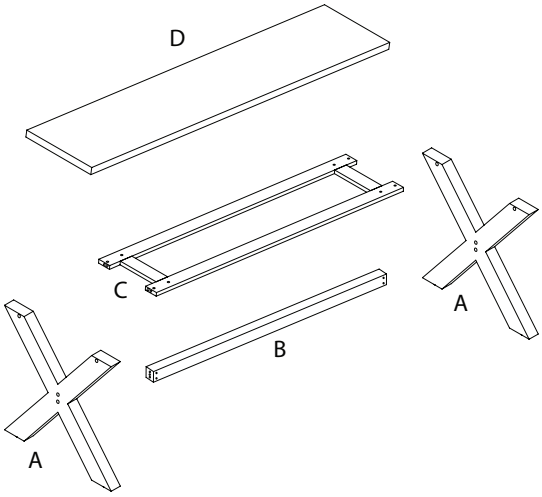

1	2	3	4	5	6
M6 x 70	M8 x 45				
x 8	x 4	x 12	x 6	x 8	x 1

1305/OLBIA/110225/

1

B	4
x 1	x 2

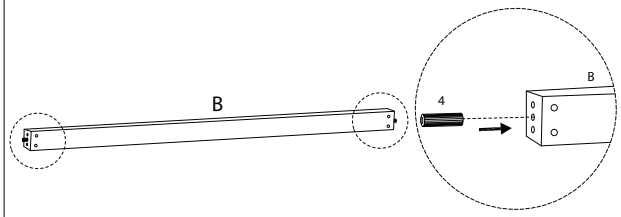

2

C	4
x 1	x 4

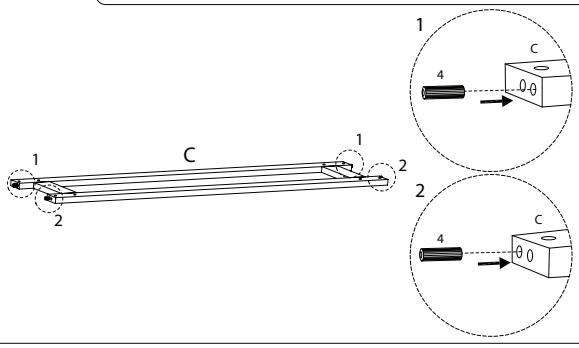

1305/OLBIA/110225/

3

A
x 1

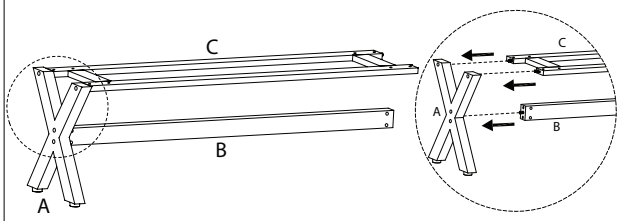
C
B
A
C
A
B

4

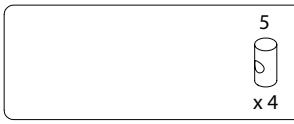
5
x 4

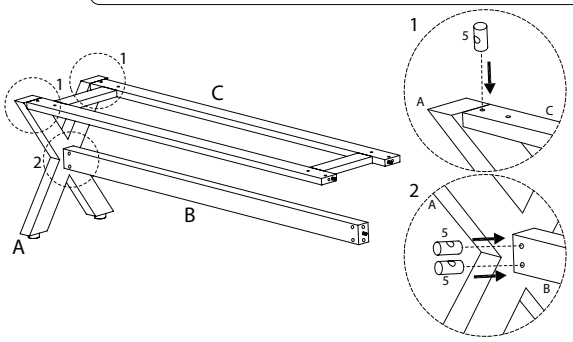
1
1
C
2
B
A
1
5
A
C
2
A
5
5
B

5

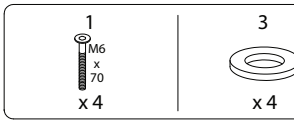
1
M6
x
70
x 4
3
x 4
6
x 1

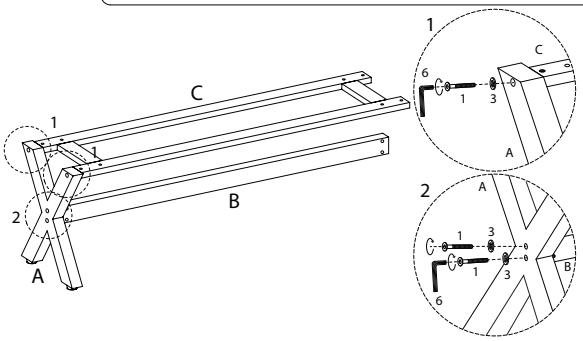
C
1
1
2
B
A
1
C
6
1
3
A
2
A
1
3
1
3
B
6

6

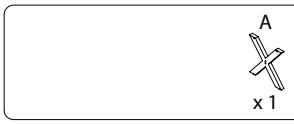
A
x 1

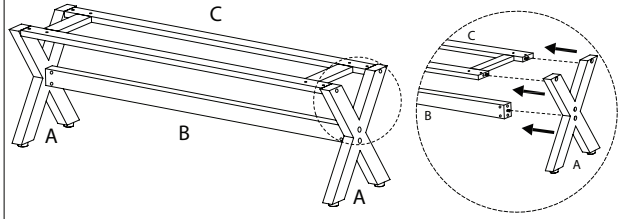
C
A
B
A
C
B
A

7

5
x 4

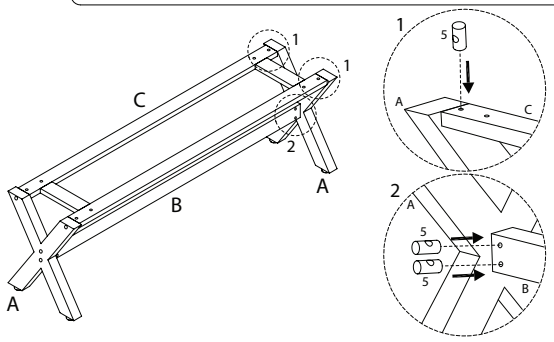
1
1
C
2
A
B
A
1
5
A
C
2
A
5
5
B

8

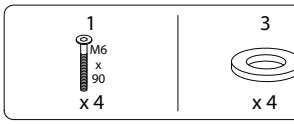
1
M6
x
90
x 4
3
x 4
6
x 1

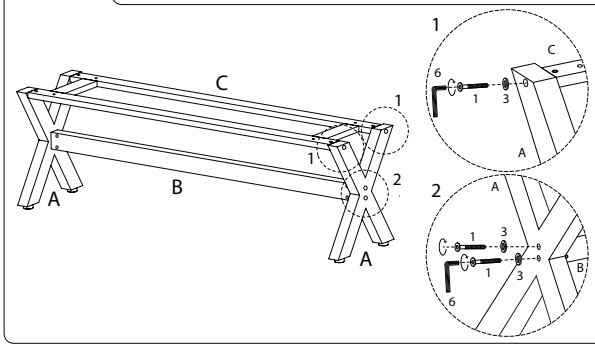
C
1
1
2
A
B
A
1
C
6
1
3
A
2
A
1
3
1
3
B
6

9

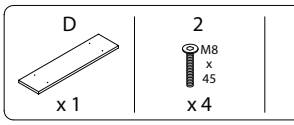
D
x 1
2
M8
x
45
x 4
3
x 4
6
x 1

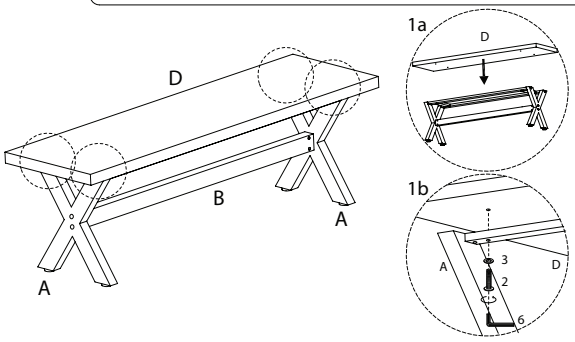
D
B
A
A
1a
D
1b
A
3
2
D
6