GROSSETO

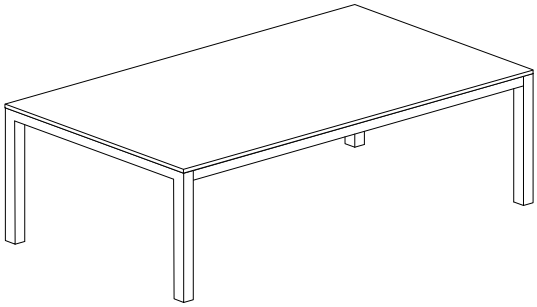

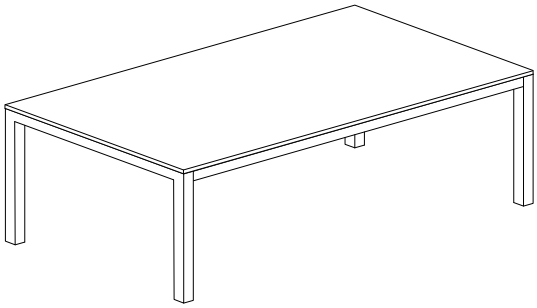

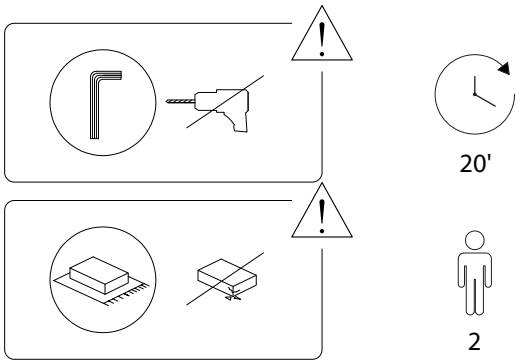
20'
2

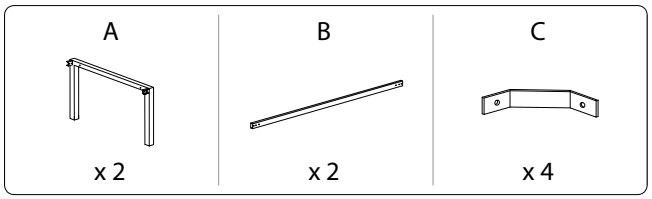
A
x 2
B
x 2
C
x 4

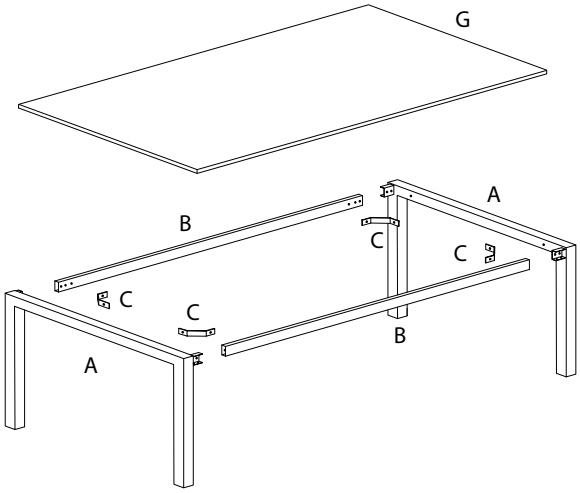
G
A
B
C
C
C
C
B
A

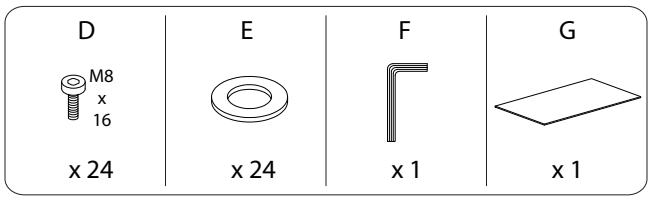
D
M8
x
16
x 24
E
x 24
F
x 1
G
x 1

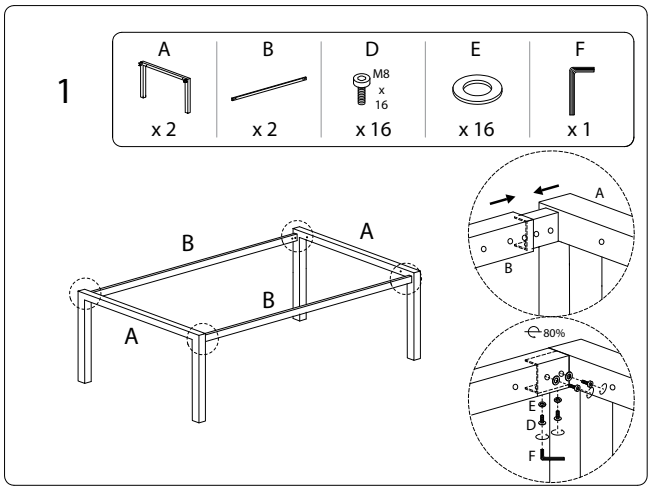
1
A
x 2
B
x 2
D
M8
x
16
x 16
E
x 16
F
x 1
B
A
B
A
A
B
80%
E
D
F

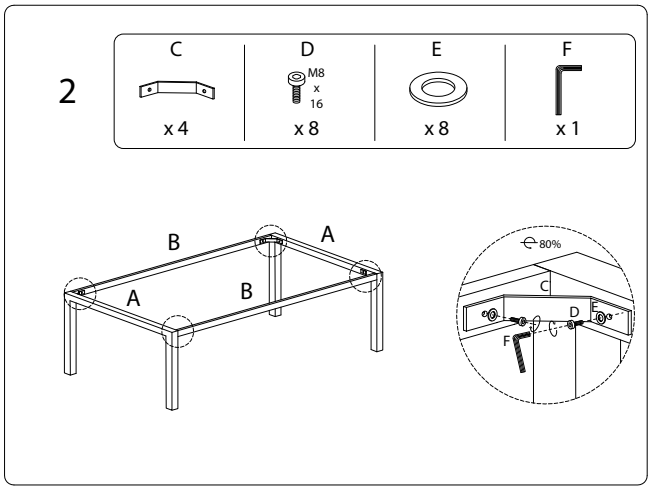
2
C
x 4
D
M8
x
16
x 8
E
x 8
F
x 1
B
A
A
B
80%
C
D
E
F

3

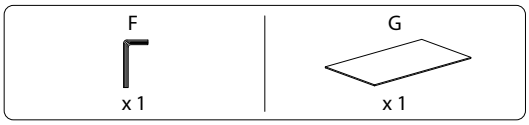

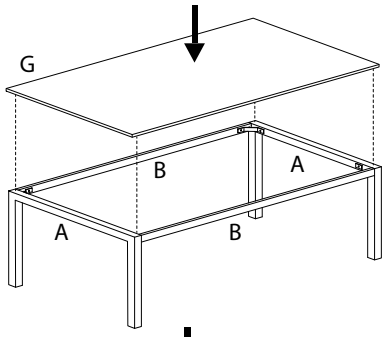

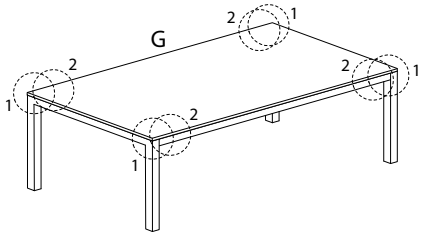

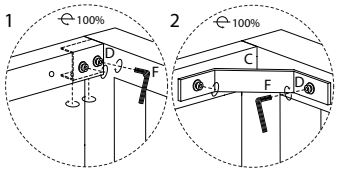

664/GROSSETO_180/020226/