CEBROSA

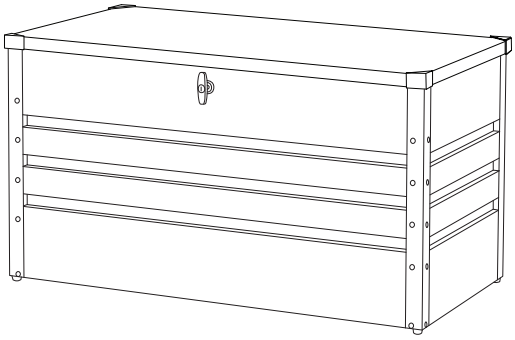

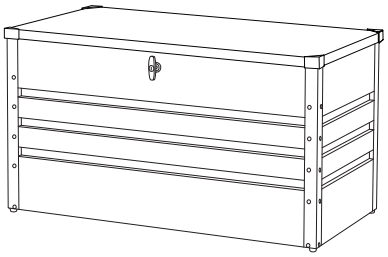

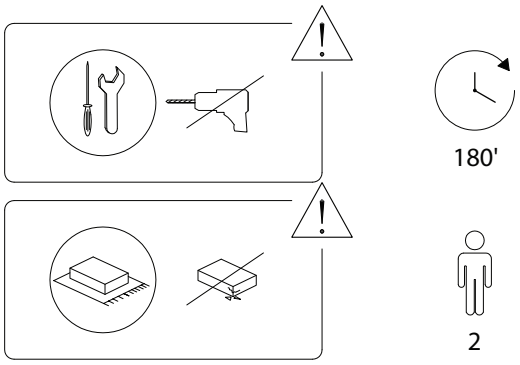

813/CEBROSA_02/110225/

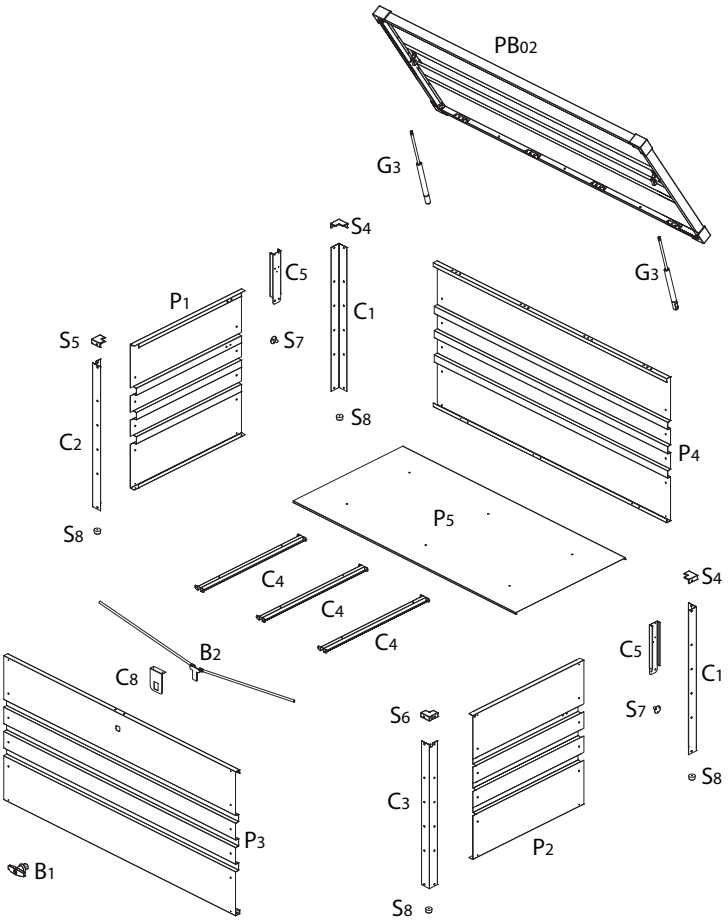

B1 x 1	B2 x 1	C1 x 2	C2 x 1	C3 x 1
C4 x 3	C5 x 2	C8 x 1	F1 M4 x 10 x 46	F2 M4 x 12 x 48
F8 M4 x 15 x 4	G3 x 2	P1 x 1	P2 x 1	P3 x 1
P4 x 1	P5 x 1	PB02 x 1	S3 x 58	S4 x 2
S5 x 1	S6 x 1	S7 x 2	S8 x 4	

813/CEBROSA_02/110225/

813/CEBROSA_02/110225/

1

C_1	C_2	F_2	P_1	S_3
x 1	x 1	M4 x 12 x 8	x 1	x 8

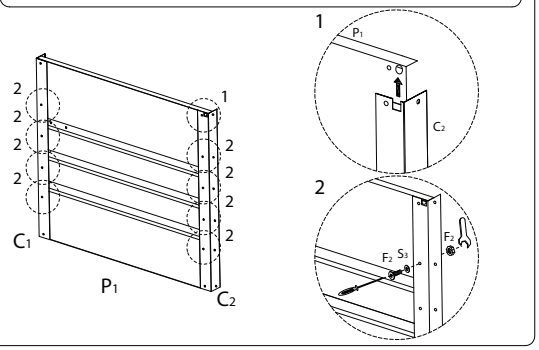

2

C_1	C_3	F_2	P_2	S_3
x 1	x 1	M4 x 12 x 8	x 1	x 8

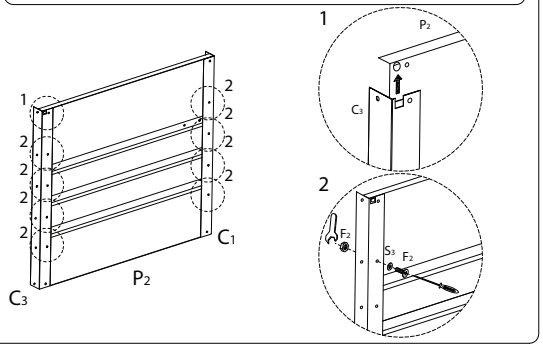

3

C_5	F_1	F_2	S_3
x 2	M4 x 10 x 4	M4 x 12 x 4	x 4

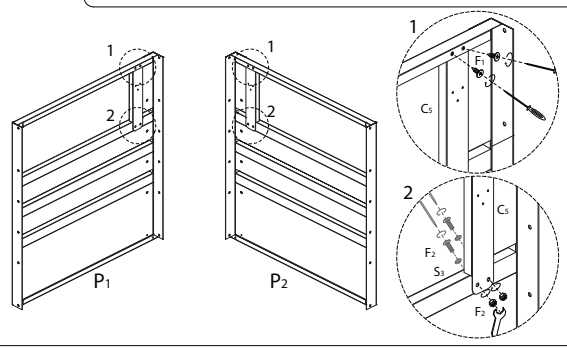

4

F_1	S_7
M4 x 10 x 6	x 2

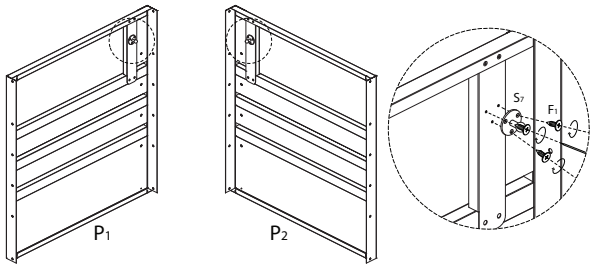

5

F_2	P_3	P_4	S_3
M4 x 12 x 8	x 1	x 1	x 8

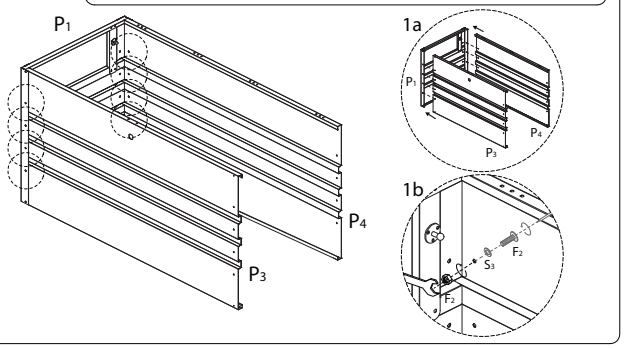

6

F_1
M4 x 10 x 12

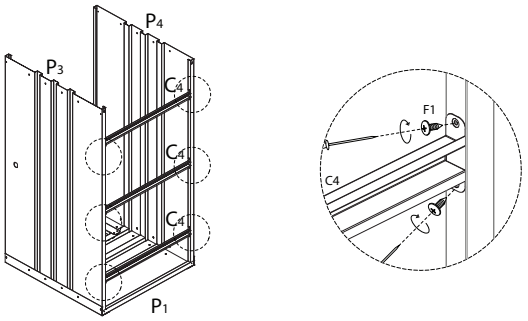

!

C_4
x 3

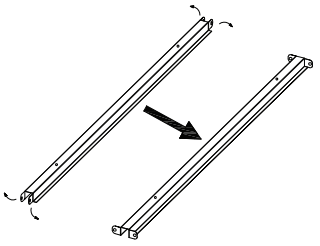

7

P_5
x 1

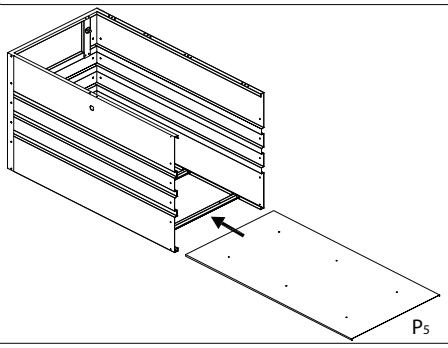

8

F_2	S_3
M4 x 12	
x 8	x 8

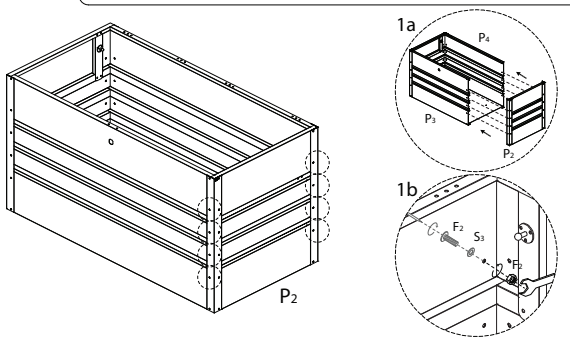

9

F_1	S_3
M4 x 10	
x 6	x 6

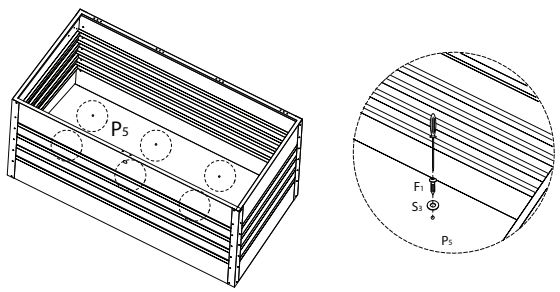

10

F_1	F_8	S_3	S_8
M4 x 10	M4 x 15		
x 8	x 4	x 8	x 4

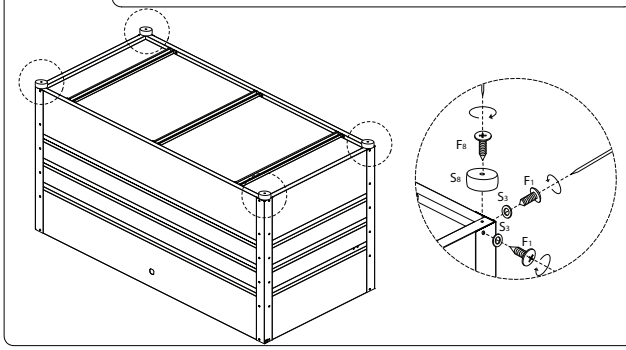

11

F_1	S_3	S_4	S_5	S_6
M4 x 10				
x 8	x 8	x 2	x 1	x 1

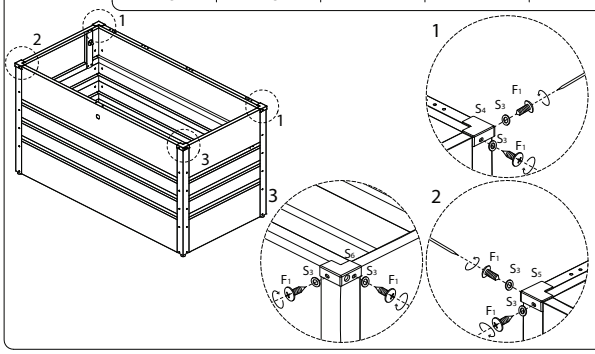

12

B_1	C_8	F_1
		M4 x 10
x 1	x 1	x 2

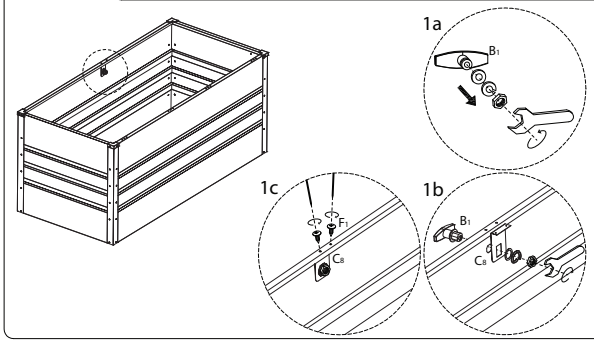

13

B_2
x 1

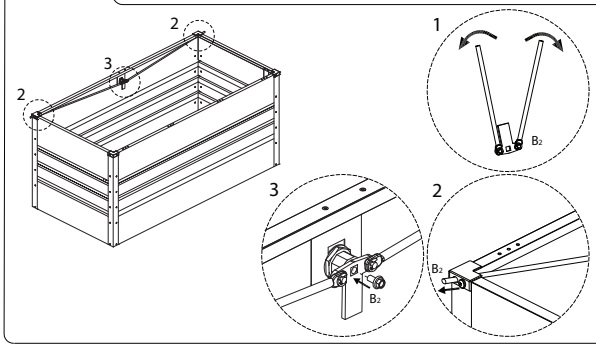

14

G_3	PB_{02}
x 2	x 1

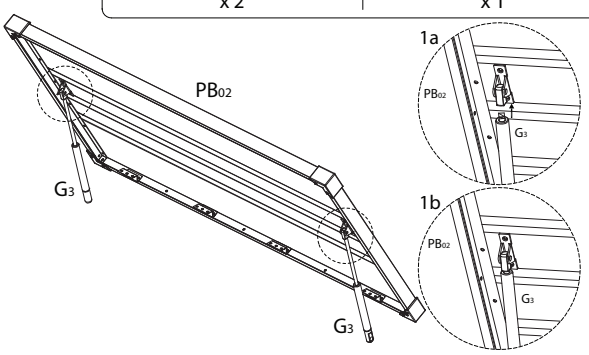

15

F_2
M4 x 12
x 12

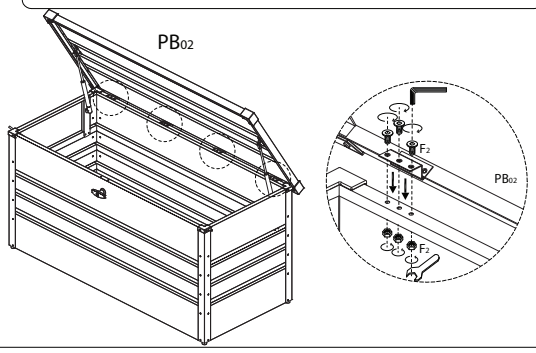

16

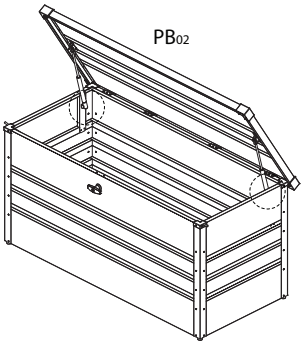

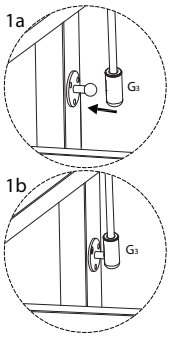

813/CEBROSA_02/110225/