CASANOOV

VOGEL 300B140

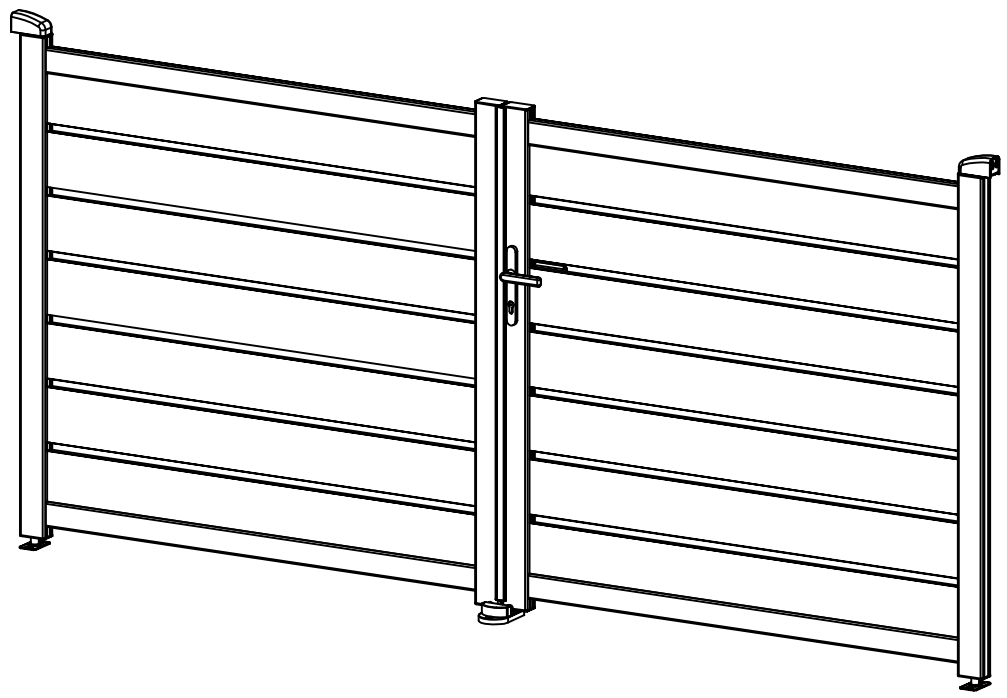

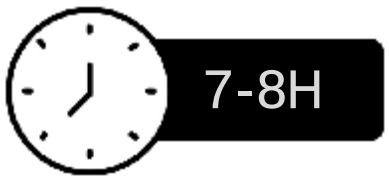

COM-000001	[x1]
COM-000002	[x1]

FR EN ES DE IT NL PL CE

NOTICE DE MONTAGE / INSTRUCTION MANUAL / MANUAL DE MONTAJE / MONTAGEANLEITUNG / MANUALE DI MONTAGGIO / MONTAGEHANDLEIDING / INSTRUKCJA MONTAŻU

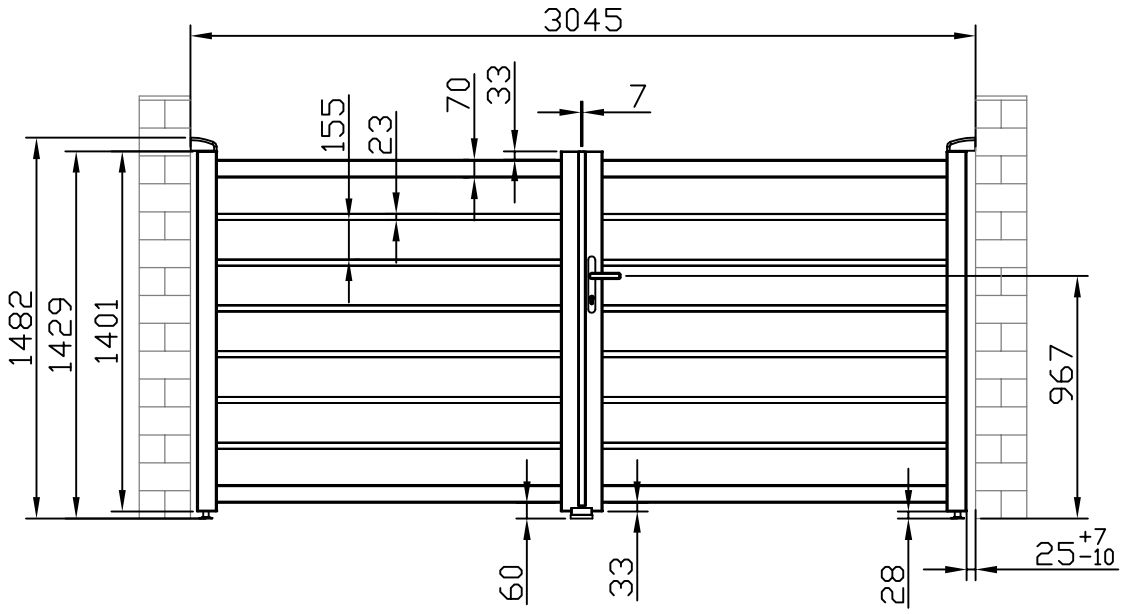
3045
155
23
70
33
7
1482
1429
1401
967
60
33
28
25 +7 -10

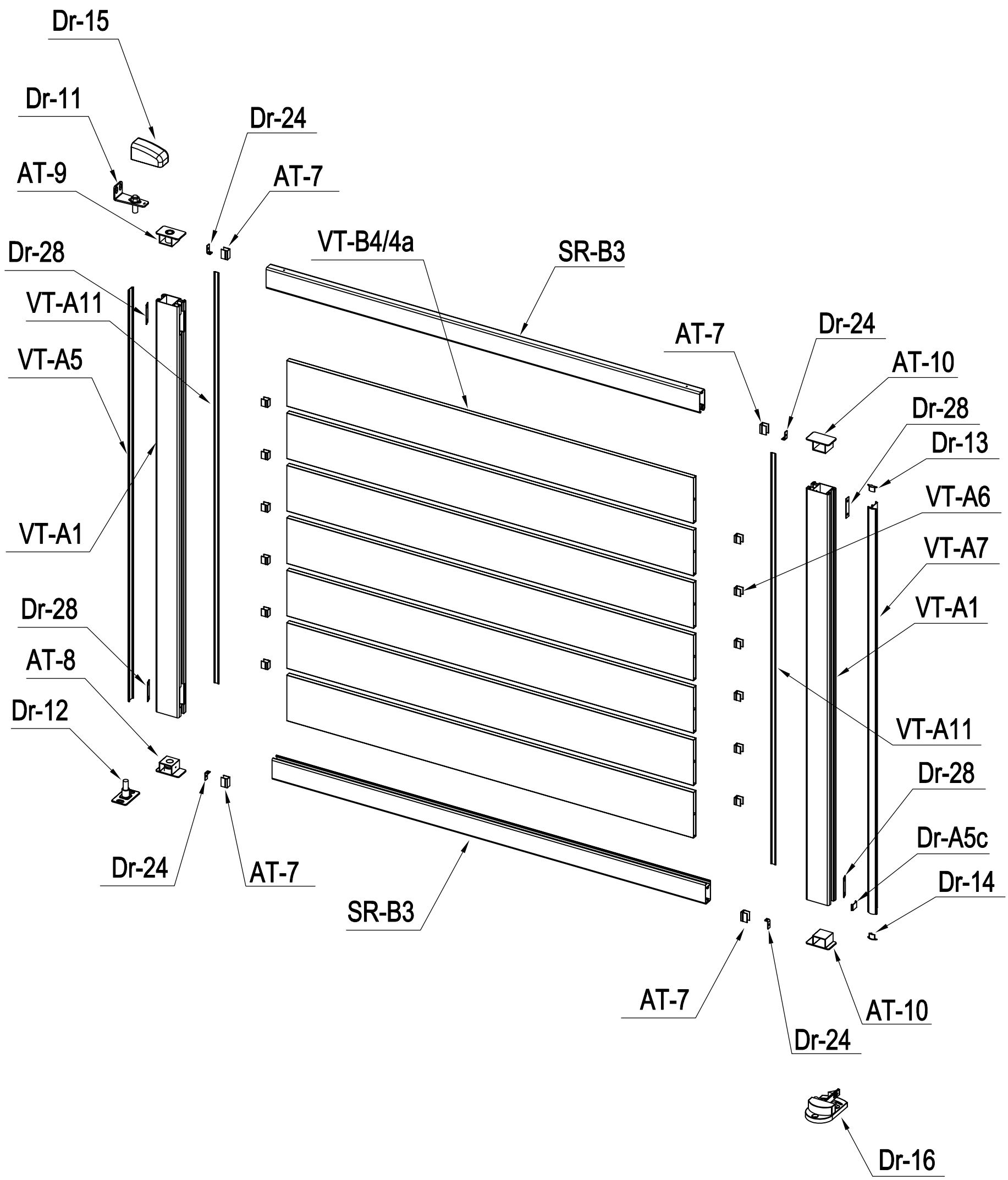
Dr-15
Dr-11
Dr-24
AT-9
AT-7
VT-B4/4a
SR-B3
Dr-28
VT-A11
AT-7
Dr-24
VT-A5
AT-10
Dr-28
Dr-13
VT-A6
VT-A1
VT-A7
Dr-28
VT-A1
AT-8
Dr-12
VT-A11
Dr-28
Dr-A5c
Dr-24
AT-7
Dr-14
SR-B3
AT-7
AT-10
Dr-24
Dr-16

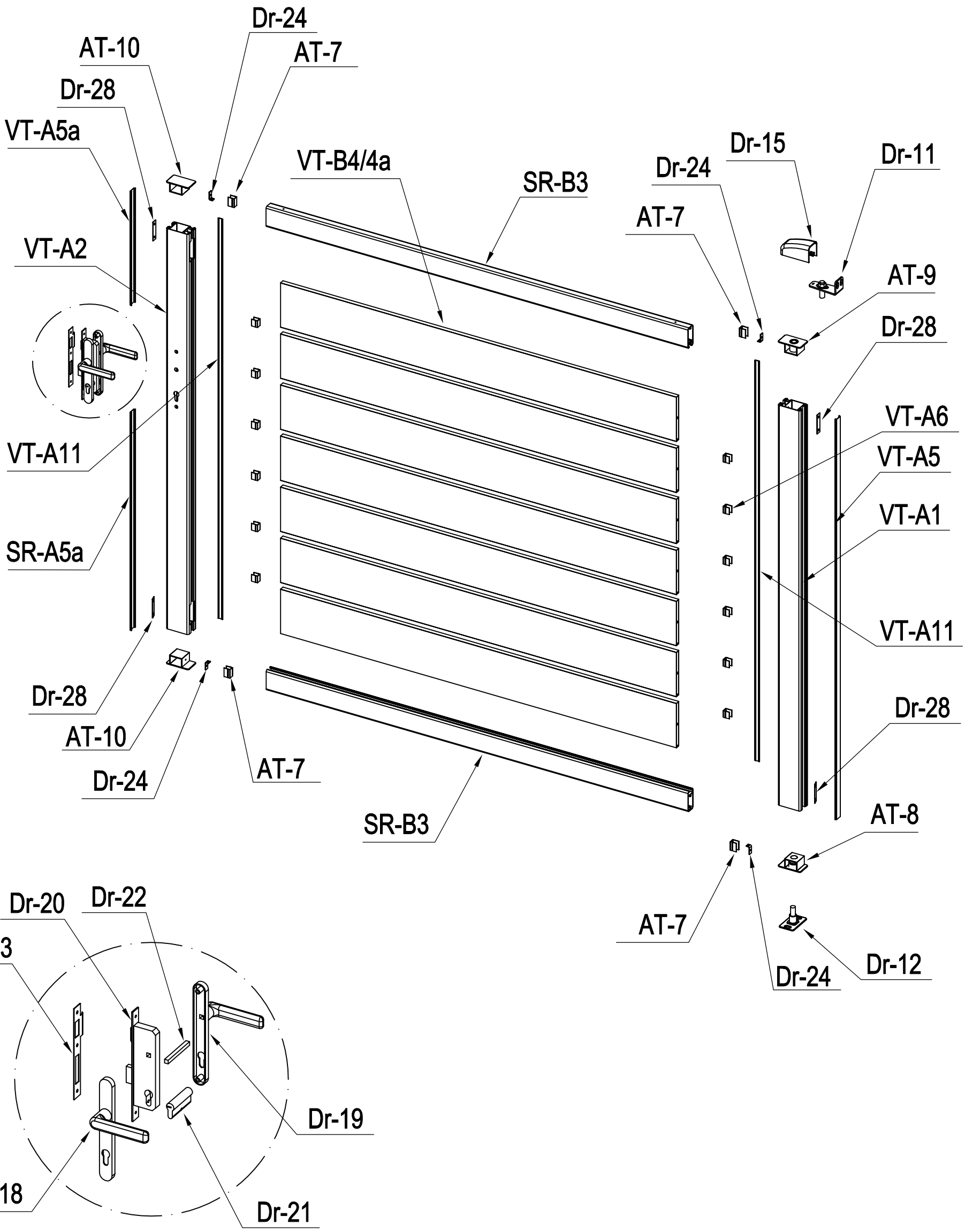
Dr-24
AT-10
AT-7
Dr-28
VT-A5a
VT-B4/4a
SR-B3
Dr-15
Dr-11
Dr-24
AT-7
VT-A2
AT-9
Dr-28
VT-A6
VT-A11
VT-A5
VT-A1
SR-A5a
VT-A11
Dr-28
Dr-28
AT-10
Dr-24
AT-7
SR-B3
AT-8
AT-7
Dr-24
Dr-12
Dr-20
Dr-22
Dr-23
Dr-19
Dr-18
Dr-21

PART LIST

IMAGE	NO.	L.(mm)	QTY
	VT-A1	1395	3
	VT-A2	1395	1
	SR-B3	1471	4
	VT-B4	1380	12
	VT-B4a (+SR-B15)	1380	2
	VT-A5	1395	2
	VT-A5a	372.5	1
	SR-A5a	782	1
	Dr-A5c	19.5	1
	VT-A11	1395	4
	VT-A6	23	24
	AT-7	29.5	8
	VT-A7	1375	1
	AT-8		2
	AT-9		2
	AT-10		4
	Dr-11		2
	Dr-12		2
	Dr-13		1
	Dr-14		1
	Dr-15		2

IMAGE	NO.	L.(mm)	QTY
	Dr-16		1
	Dr-17		2
	Dr-31		4
	Dr-18		1
	Dr-19		1
	Dr-20		1
	Dr-21		1
	Dr-22		1
	Dr-23		1
	Dr-24		8
	Dr-25		1
	Dr-25a		2
	Dr-26		3
	Dr-27		2
	VT-D30		8
	VT-D31		8
	VT-D32		12
	VT-D33		16
	VT-D34		3
	VT-D35		3
	VT-D36		56
	Dr-28		8

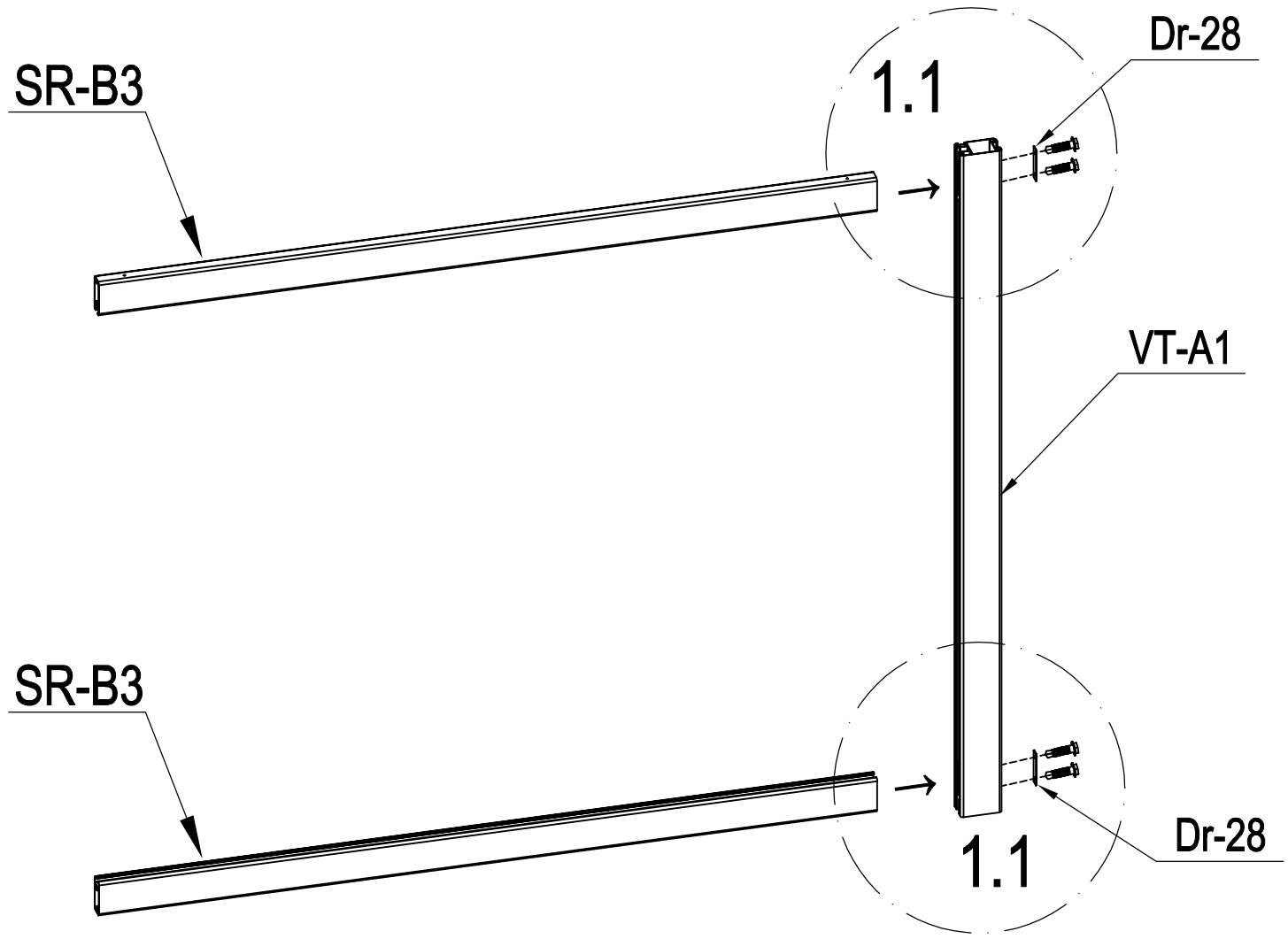

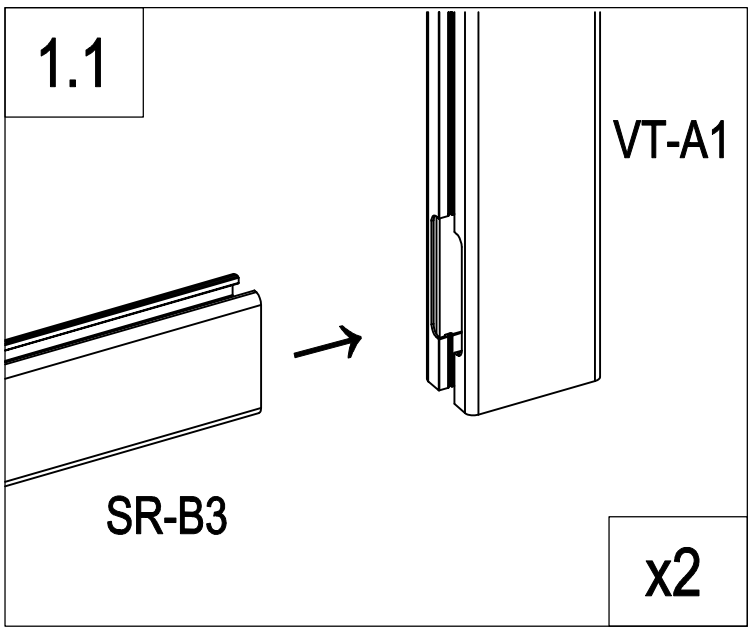

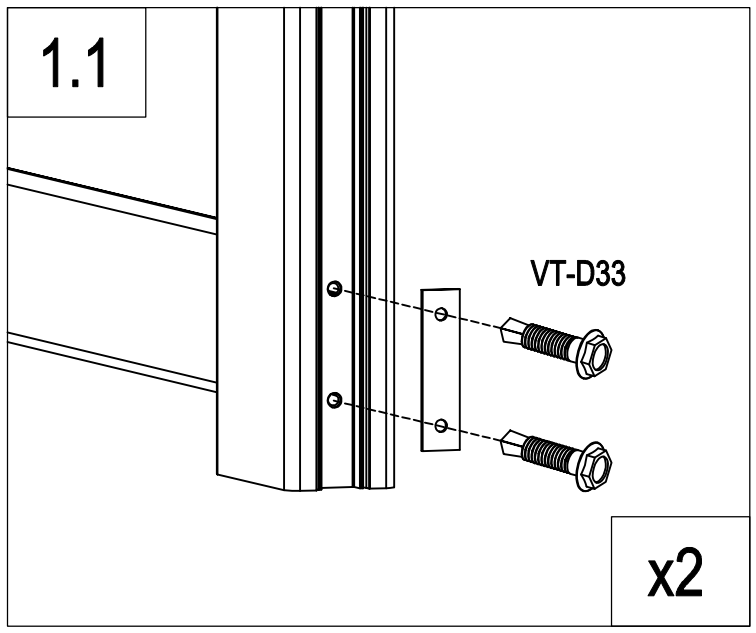

	VT-A1	1
	SR-B3	2
	Dr-28	2
	VT-D33	4

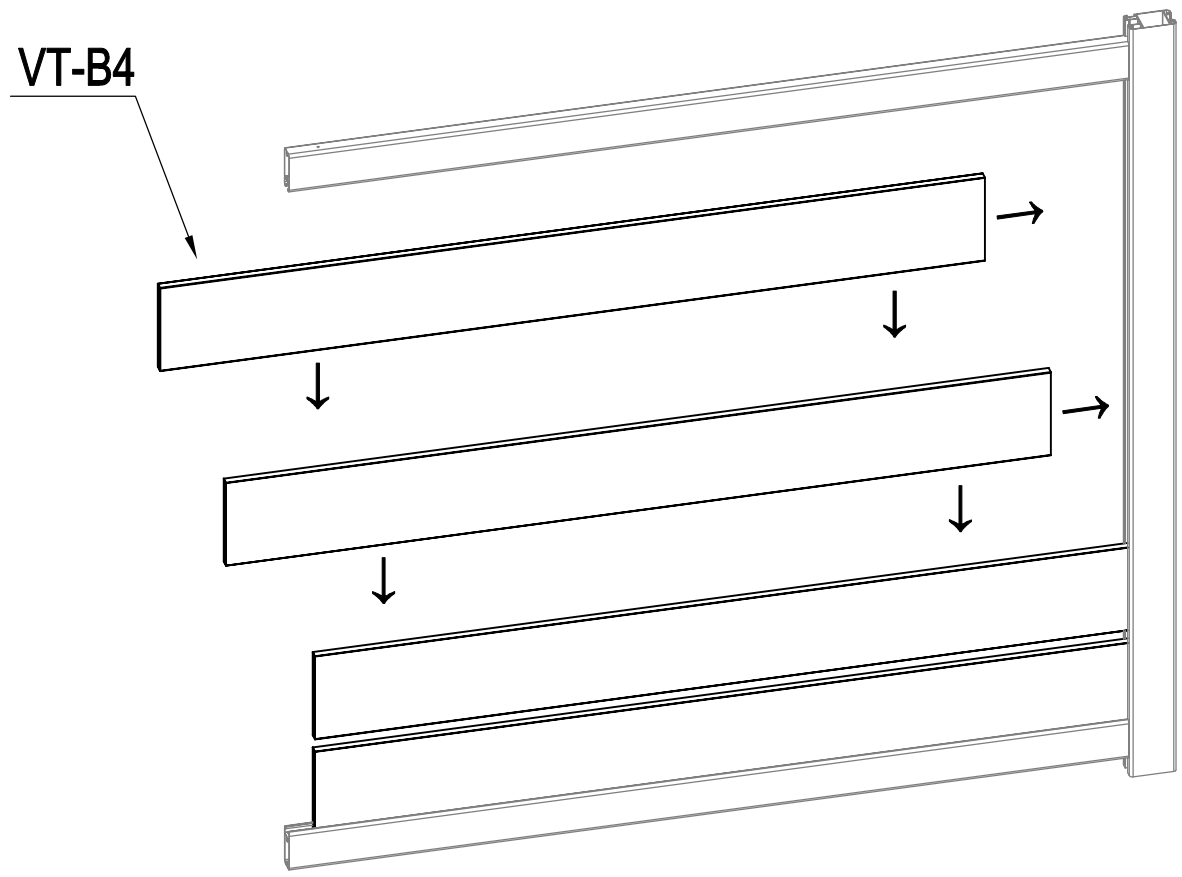

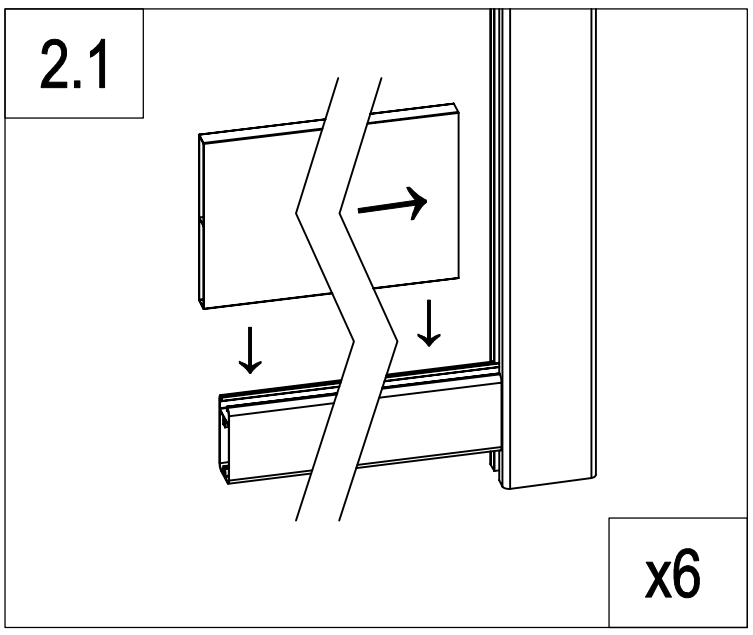

	VT-B4	6

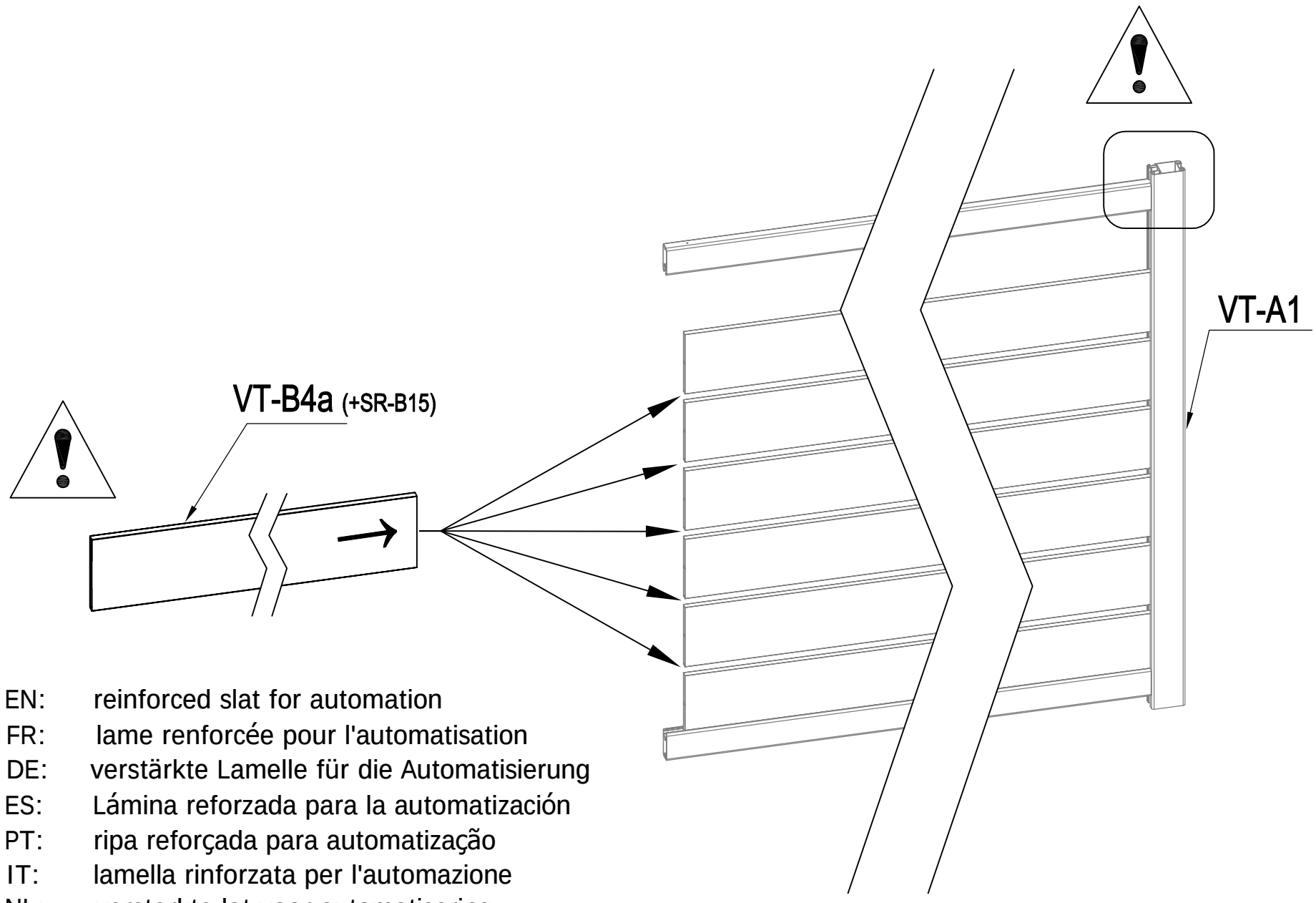

EN: reinforced slat for automation
FR: lame renforcée pour l'automatisation
DE: verstärkte Lamelle für die Automatisierung
ES: Lámina reforzada para la automatización
PT: ripa reforçada para automatização
IT: lamella rinforzata per l'automazione
NL: versterkte lat voor automatisering
PL: wzmocniona listwa do automatyzacji

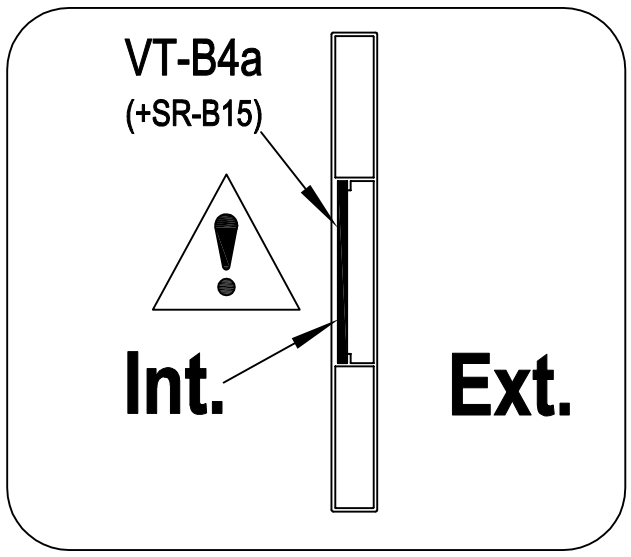

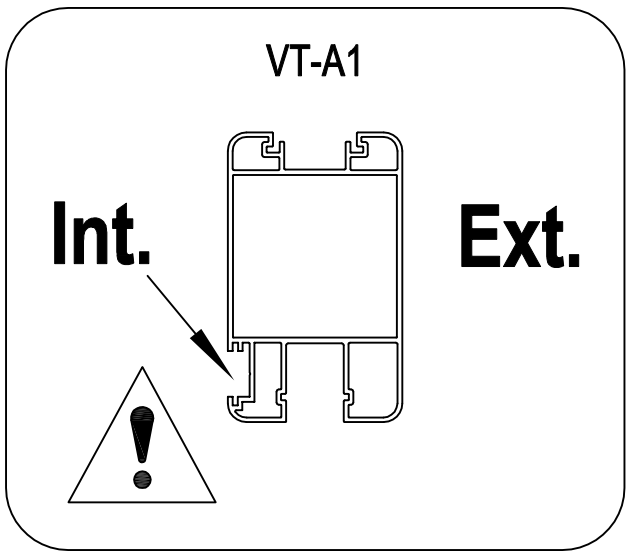

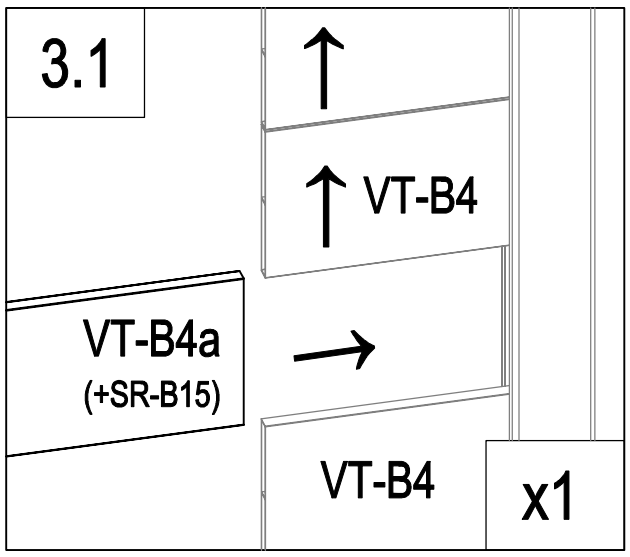

	VT-B4a (+SR-B15)	1

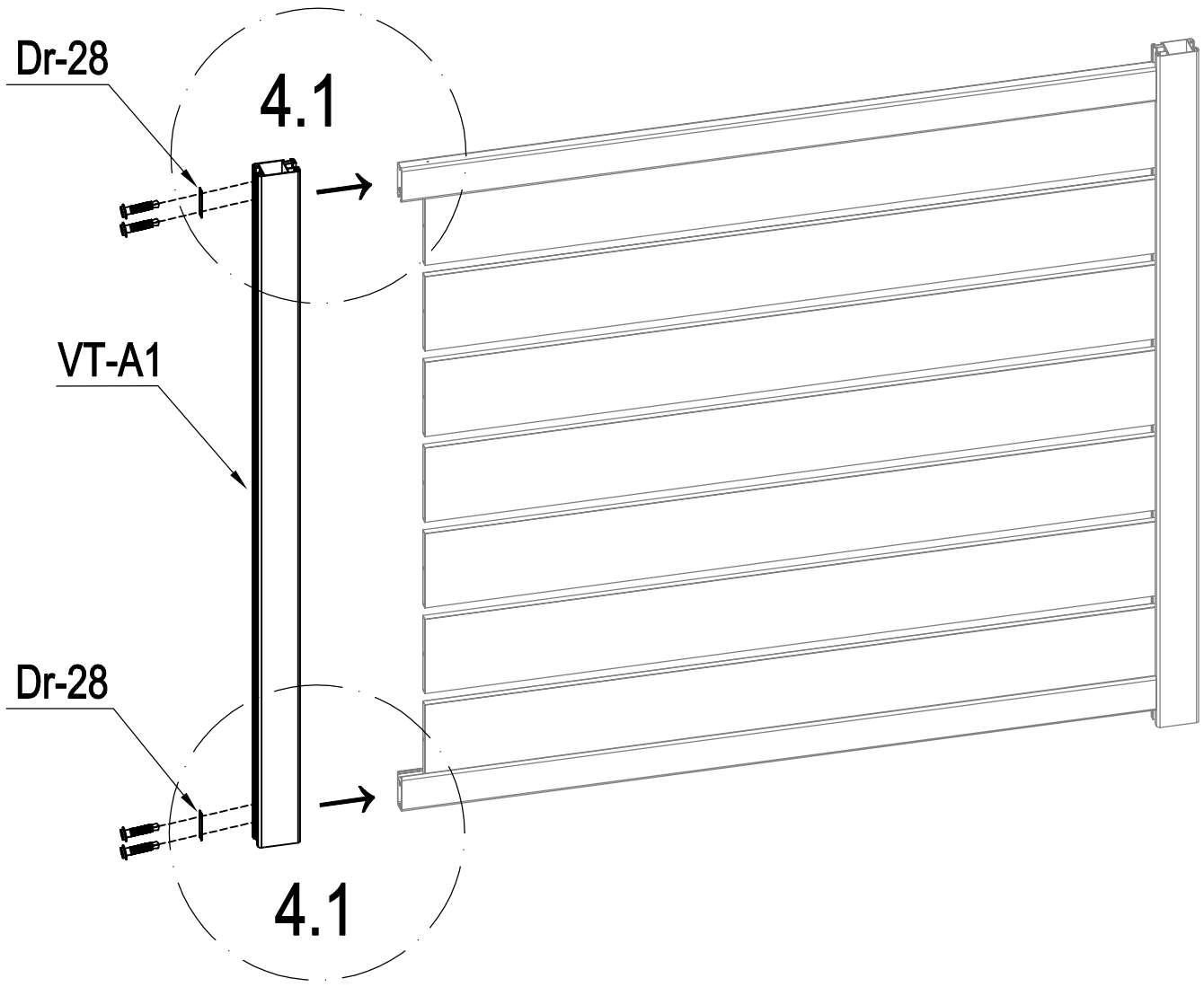

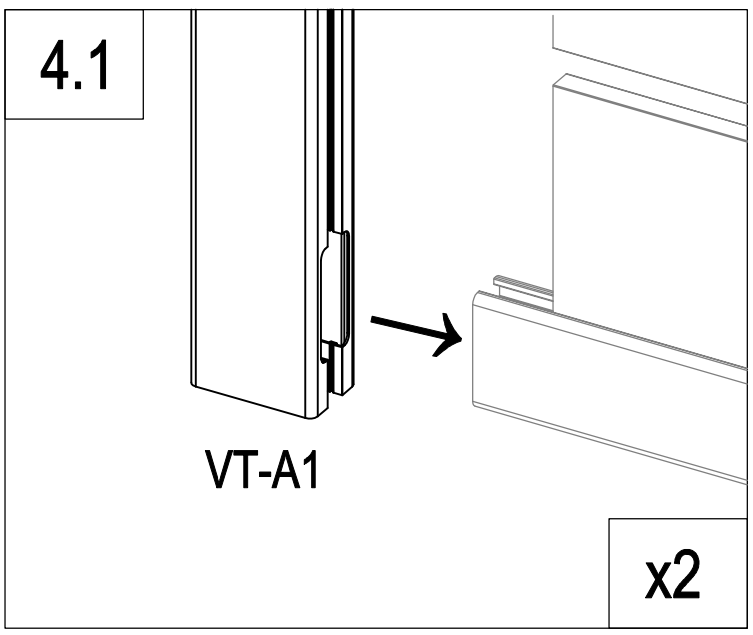

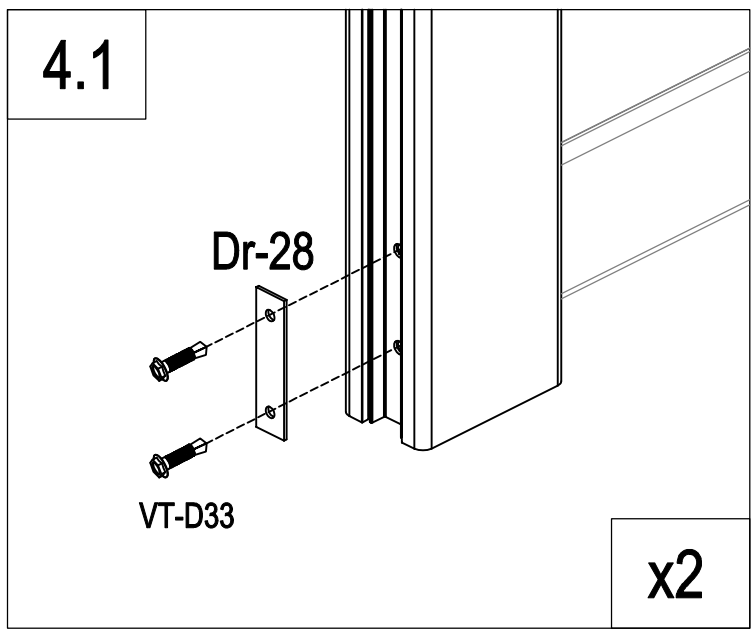

	VT-A1	1
	Dr-28	2
	VT-D33	4

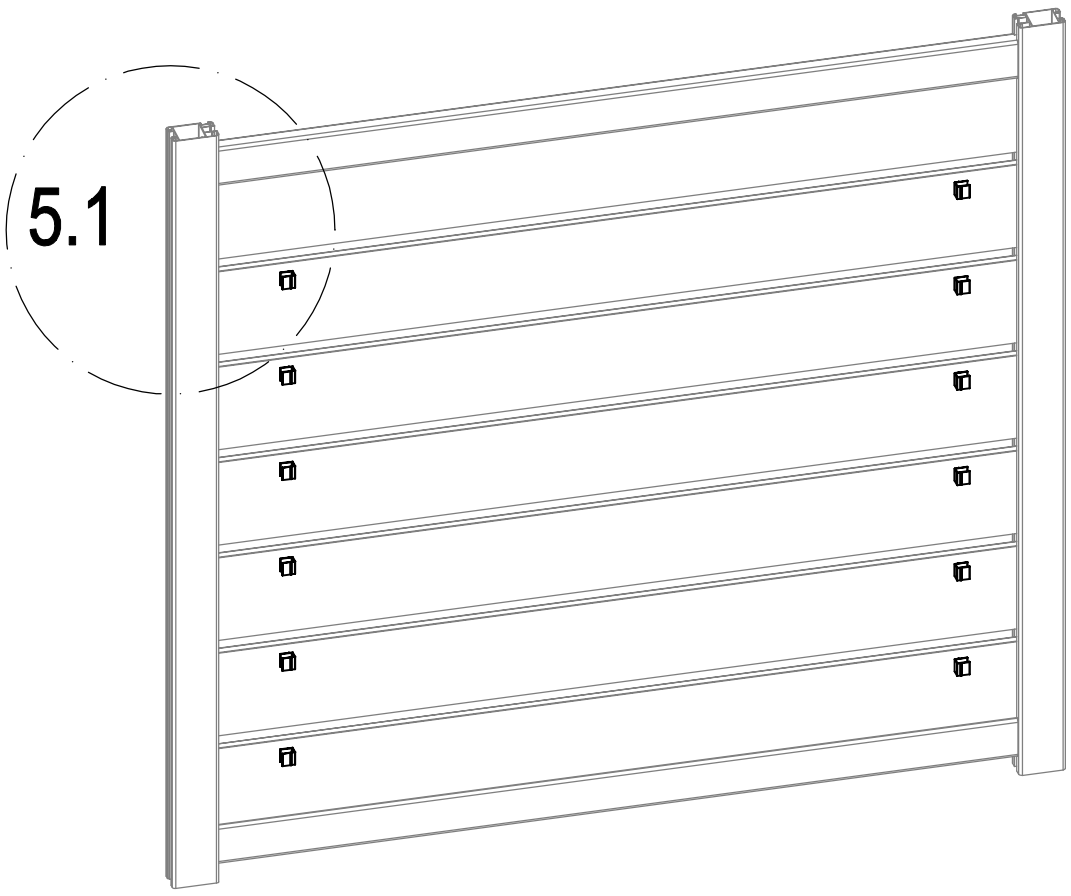

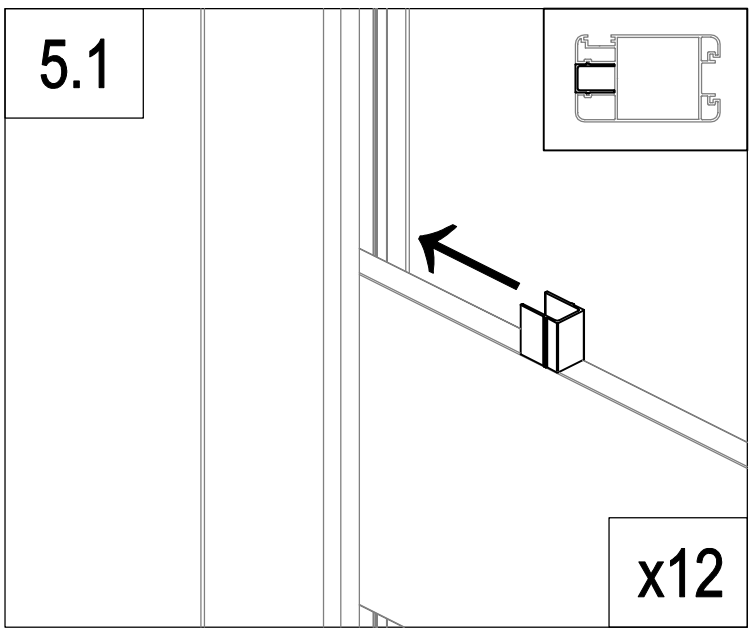

	VT-A6	12

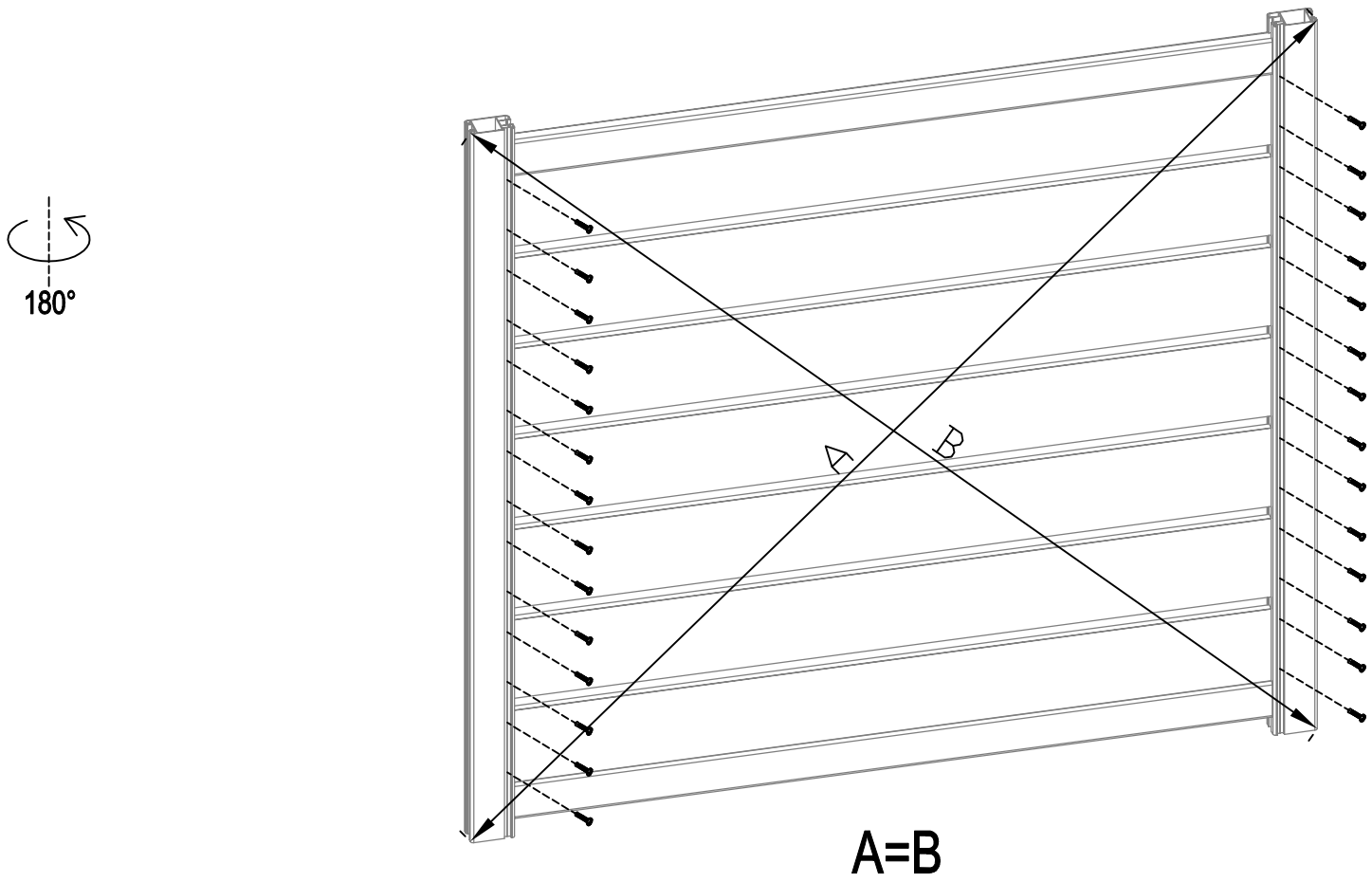

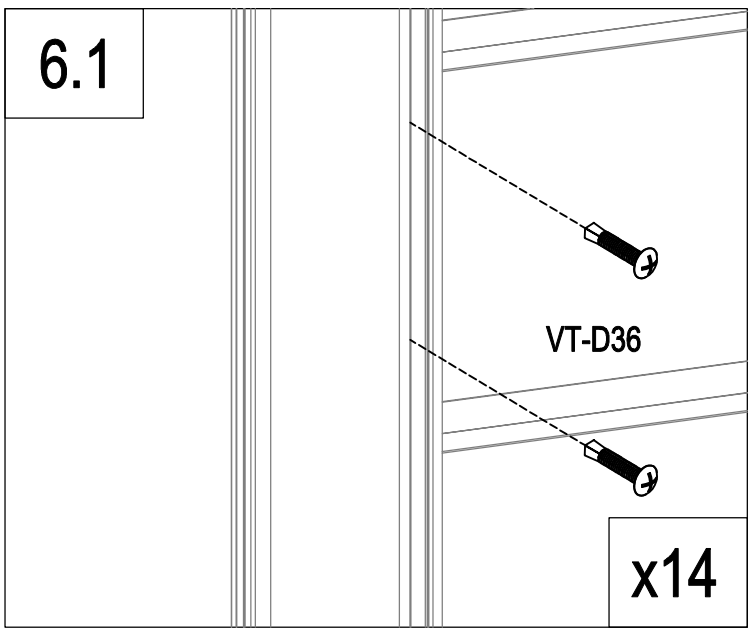

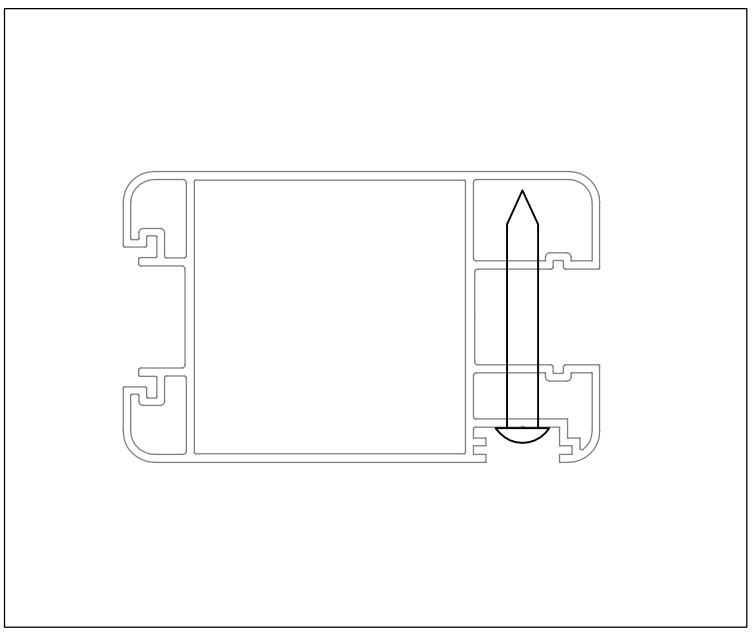

	VT-D36	28

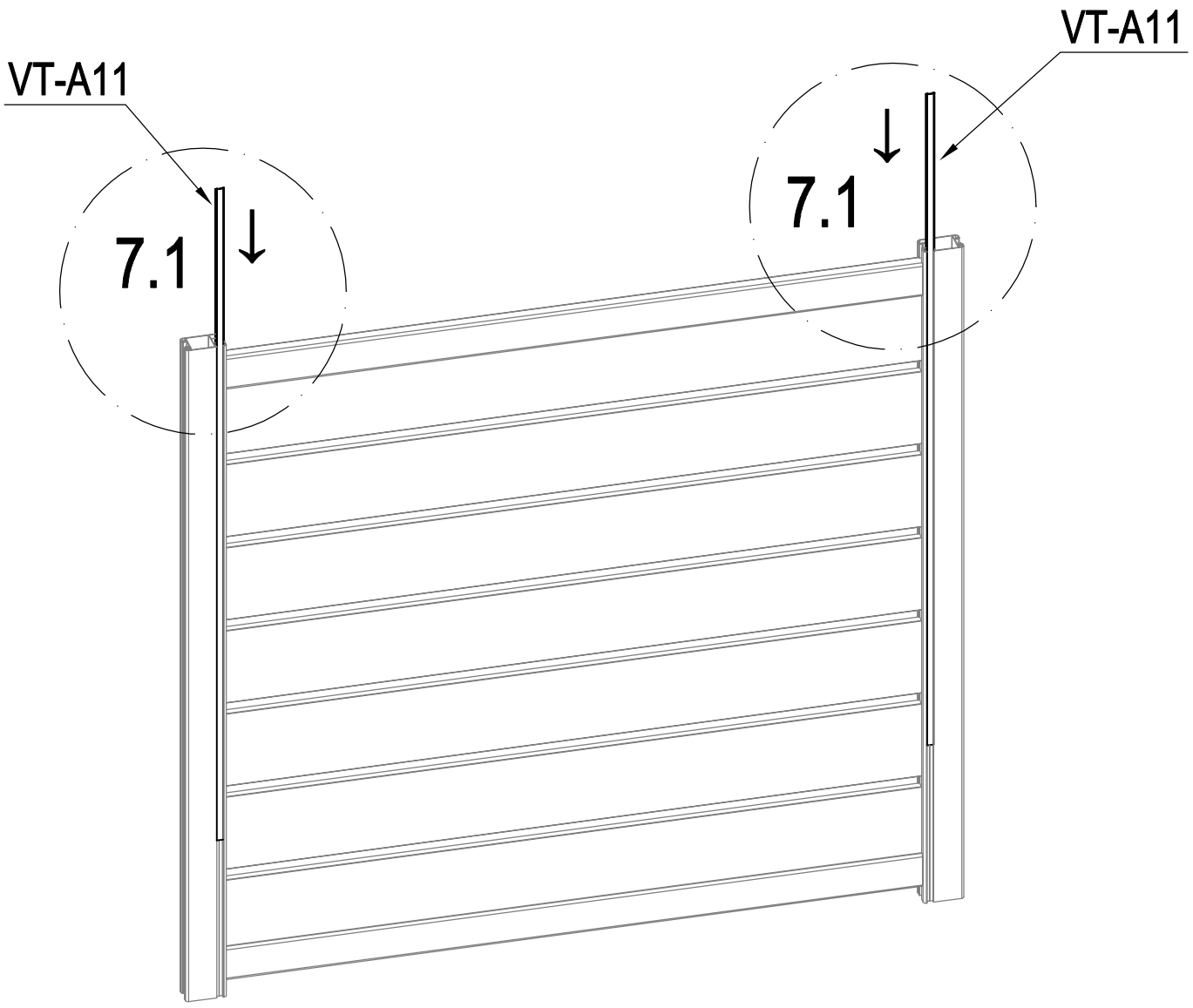

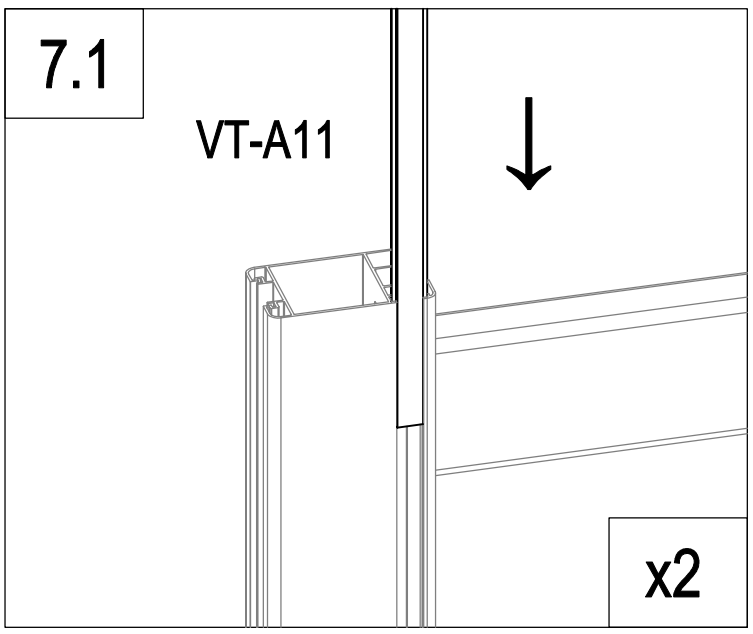

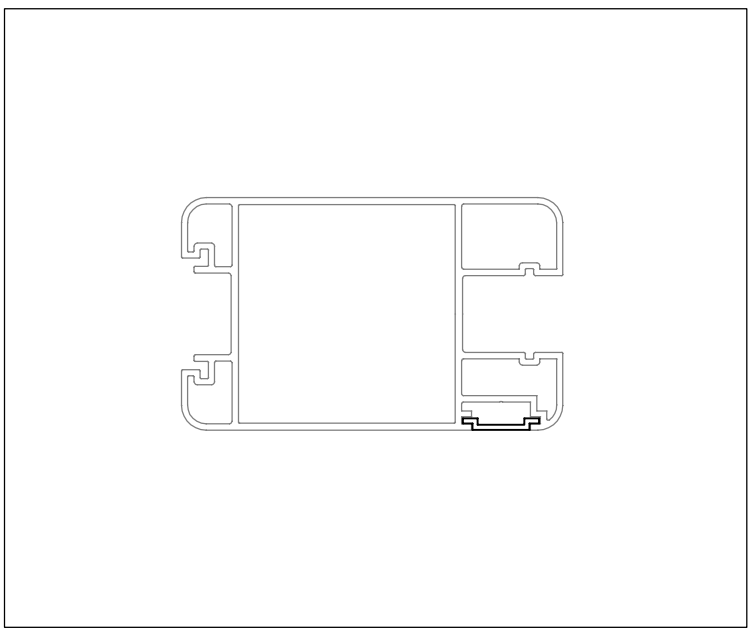

	VT-A11	2

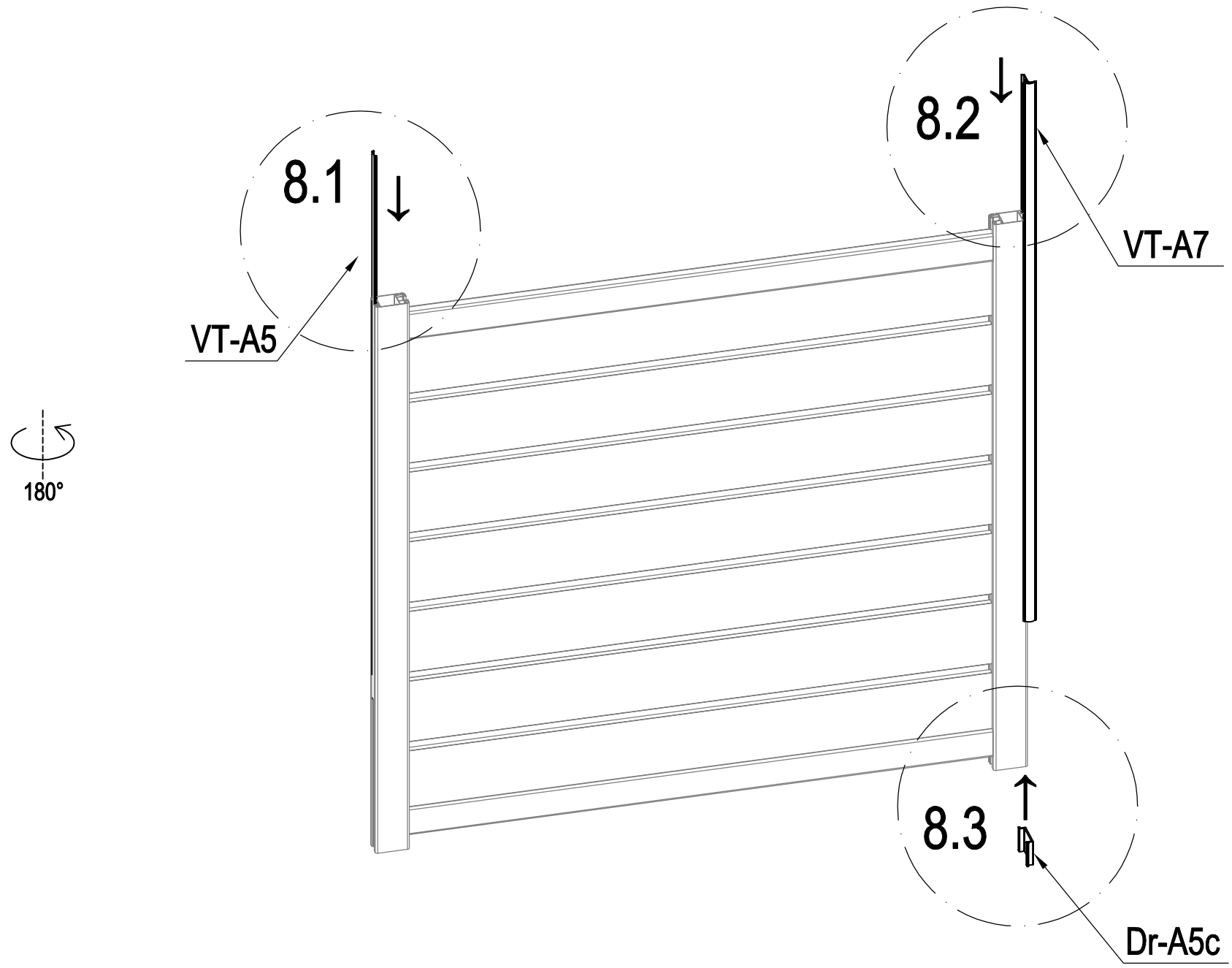

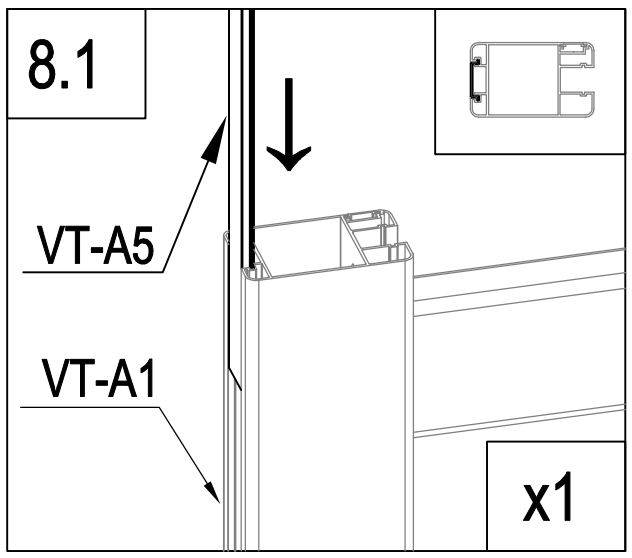

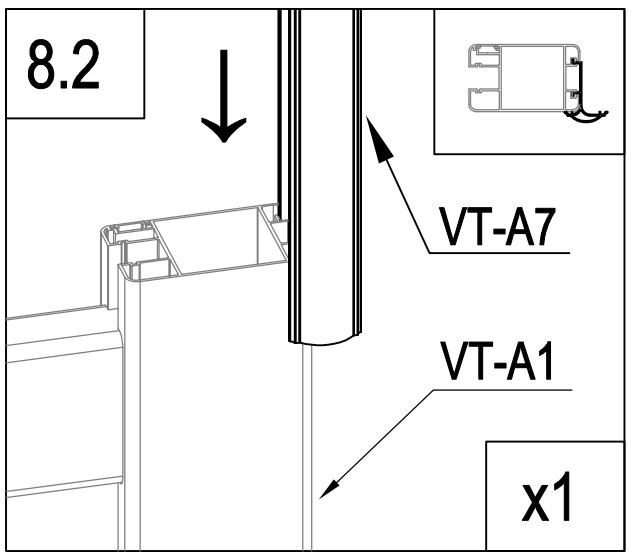

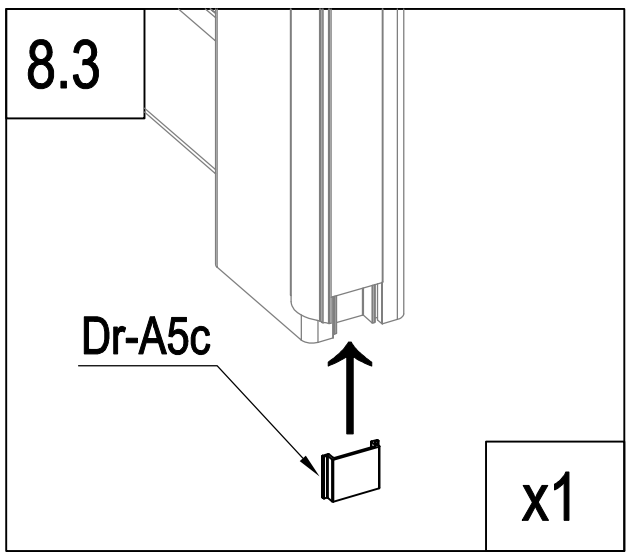

	VT-A5	1
	Dr-A5c	1
	VT-A7	1

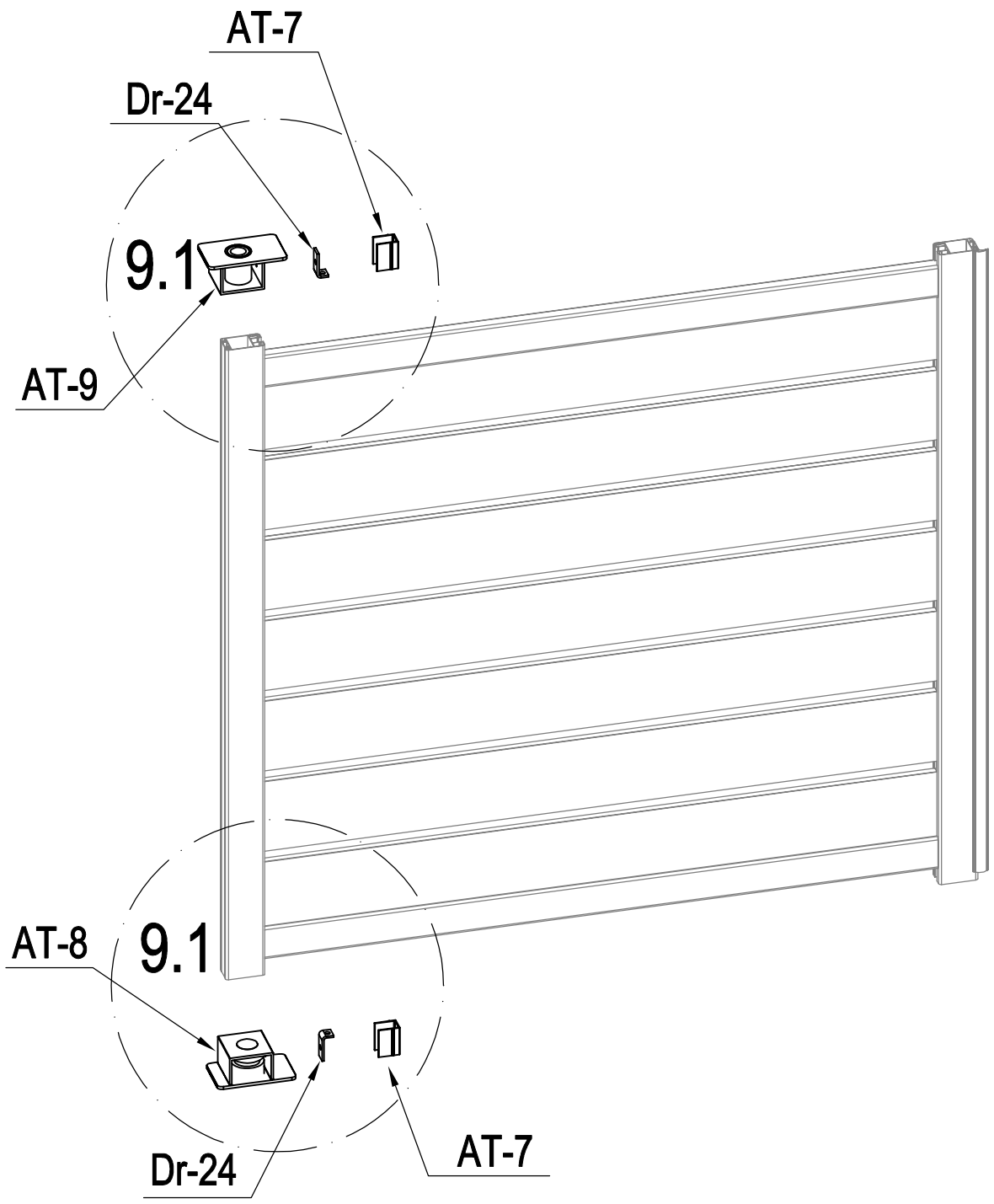

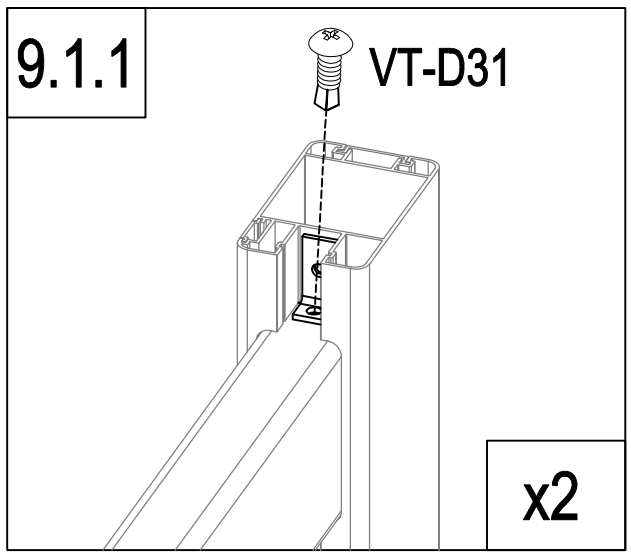

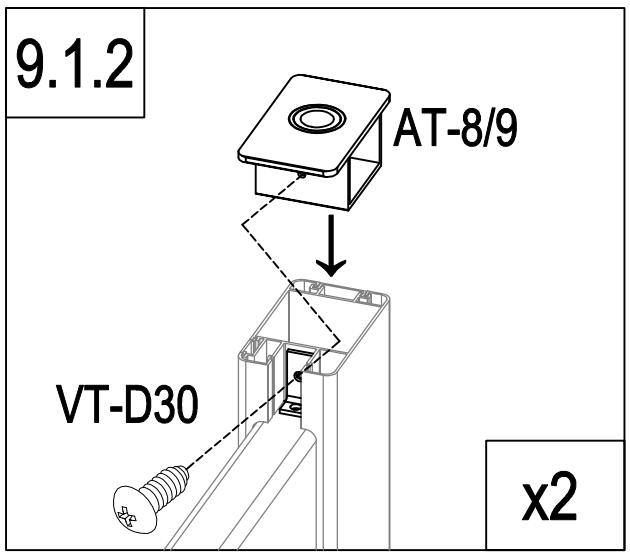

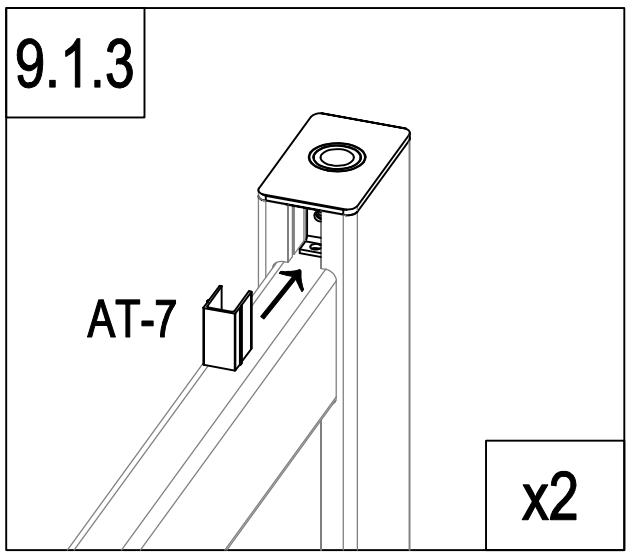

	AT-8	1
	AT-9	1
	Dr-24	2

	AT-7	2
	VT-D30	2
	VT-D31	2

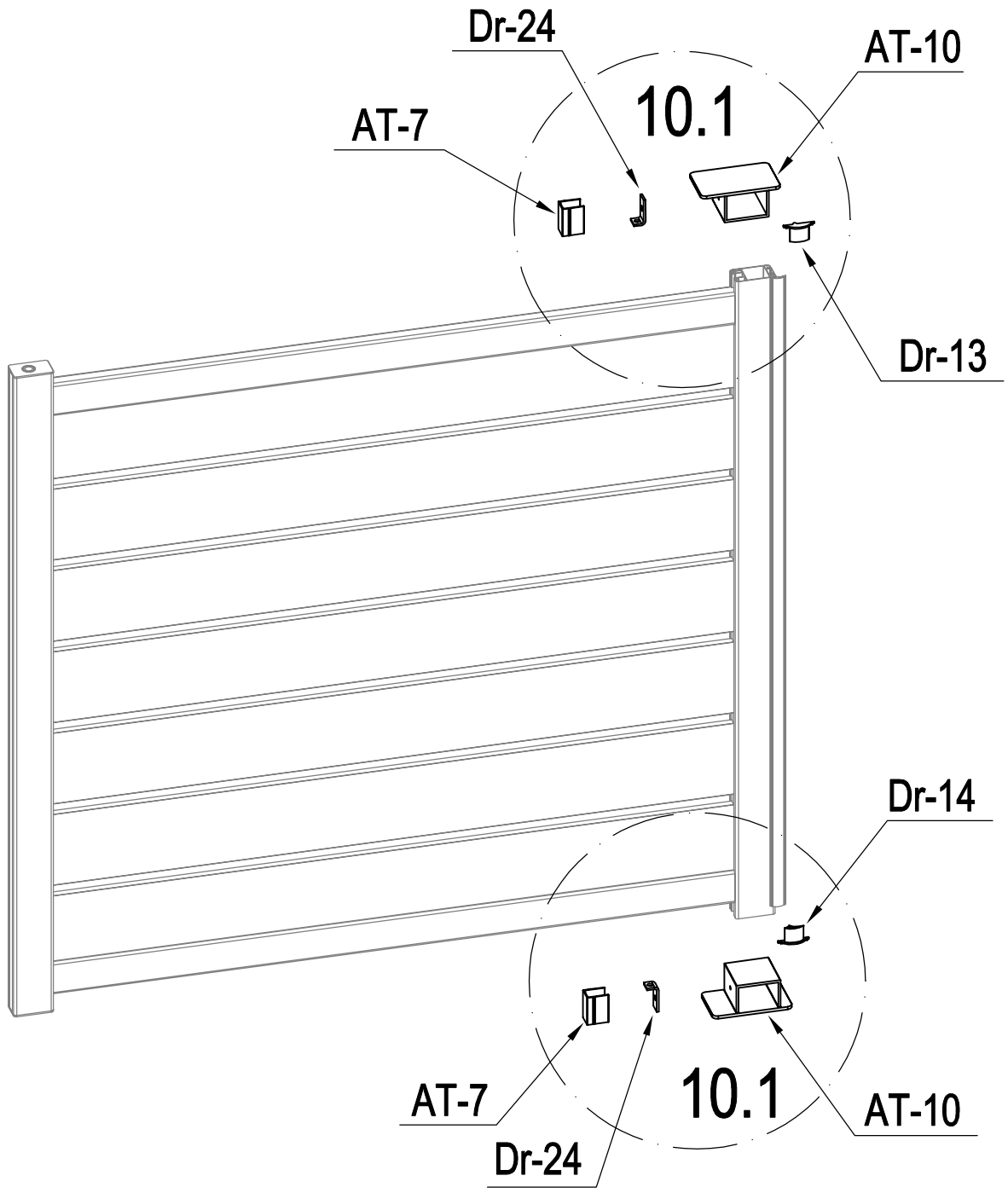

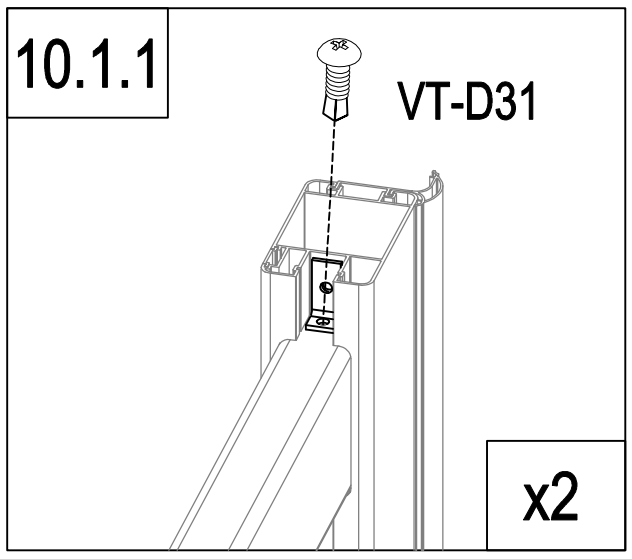

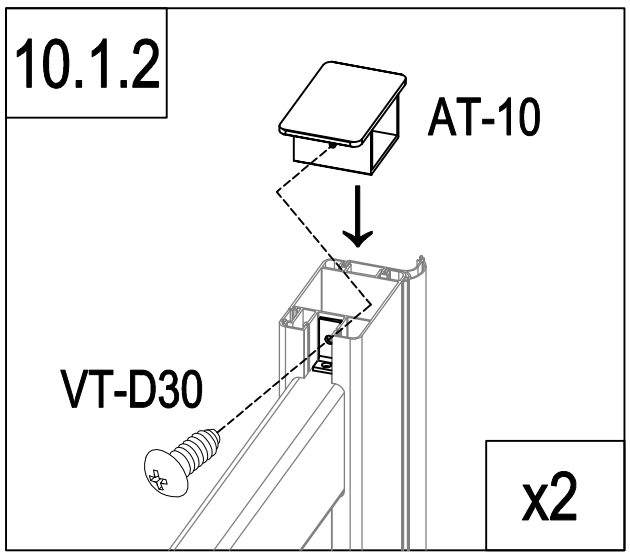

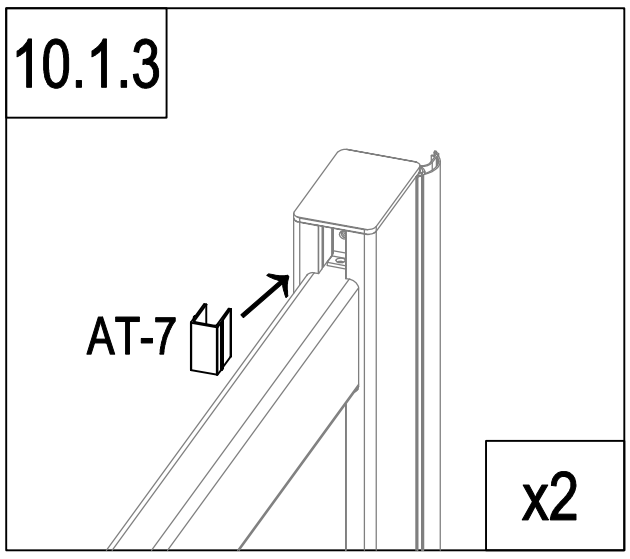

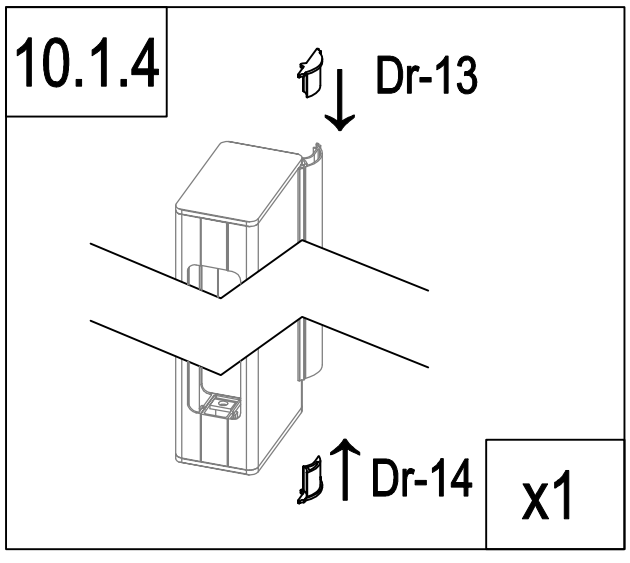

	AT-10	2
	Dr-24	2
	AT-7	2
	Dr-13	1

	Dr-14	1
	VT-D30	2
	VT-D31	2

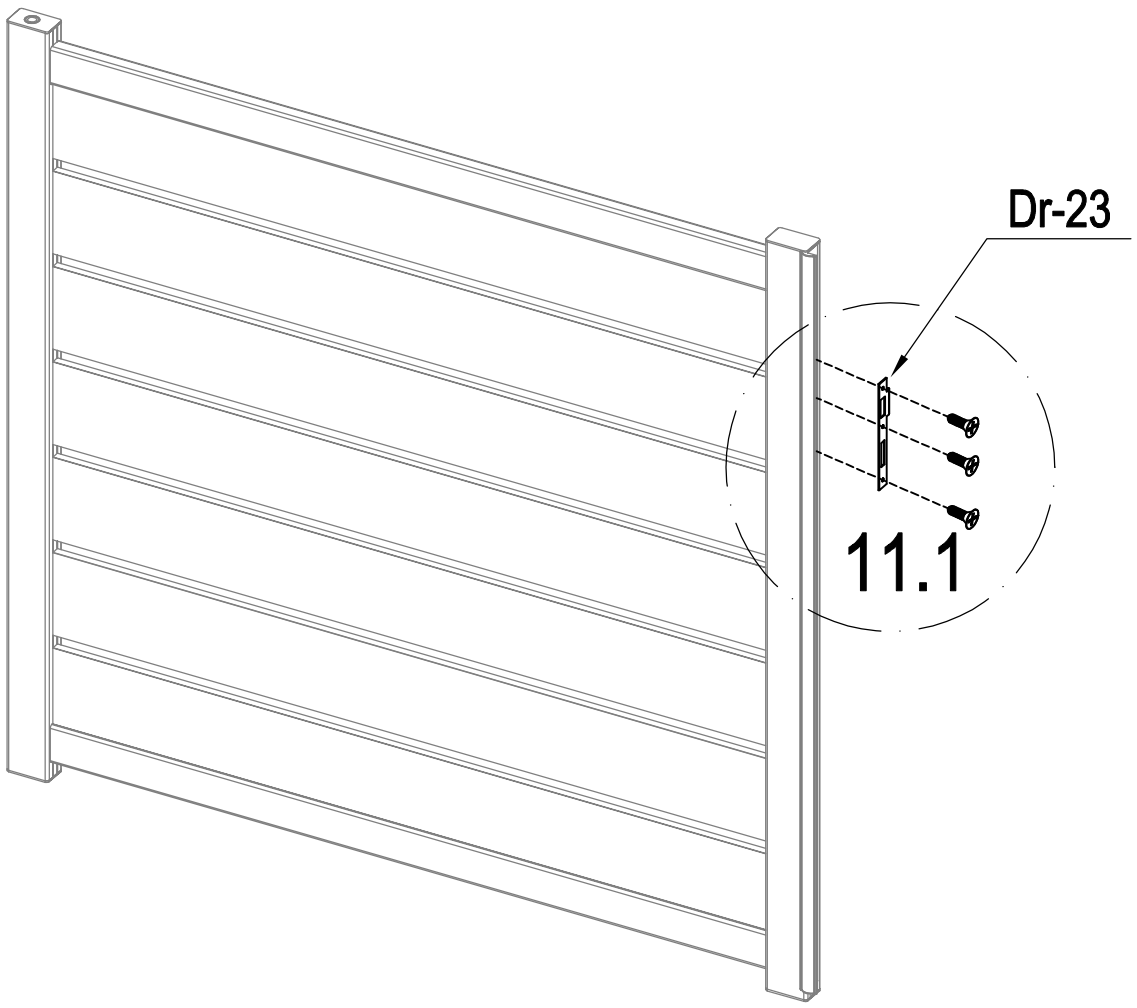

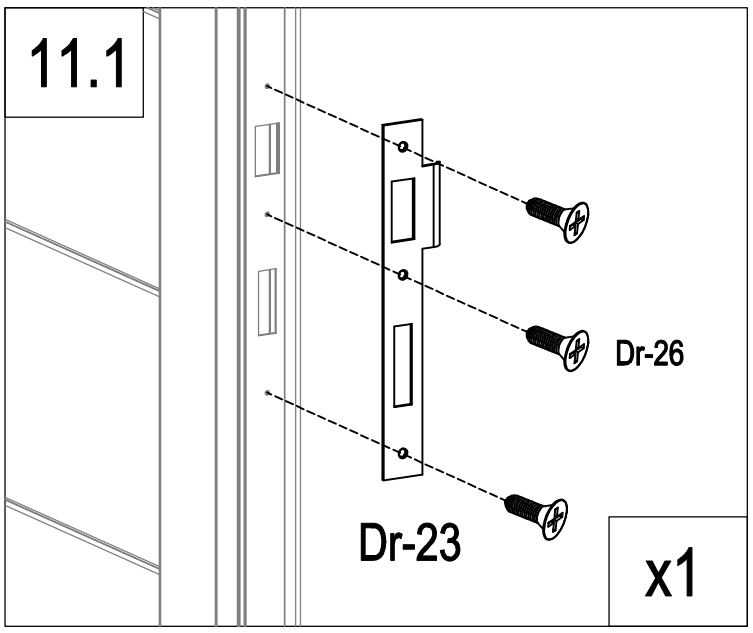

	Dr-23	1
	Dr-26	3

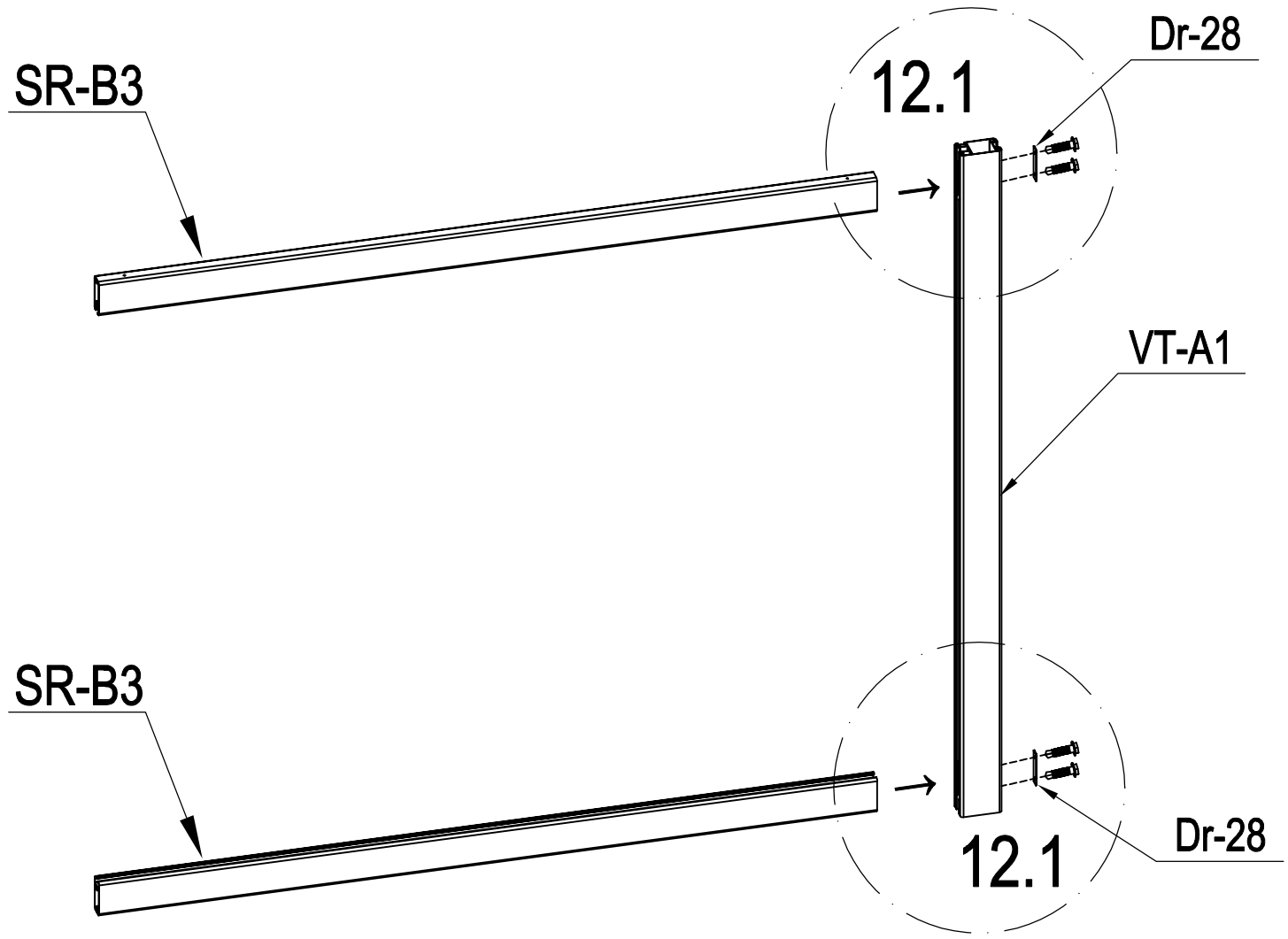

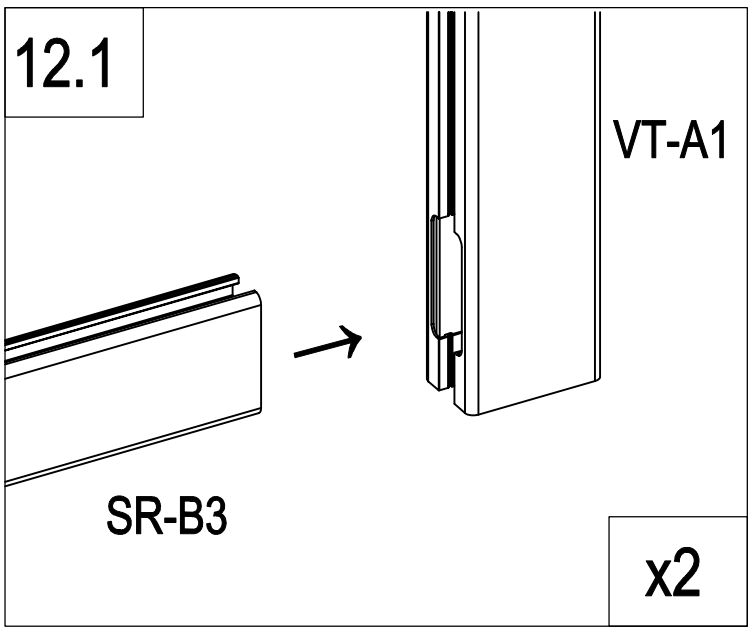

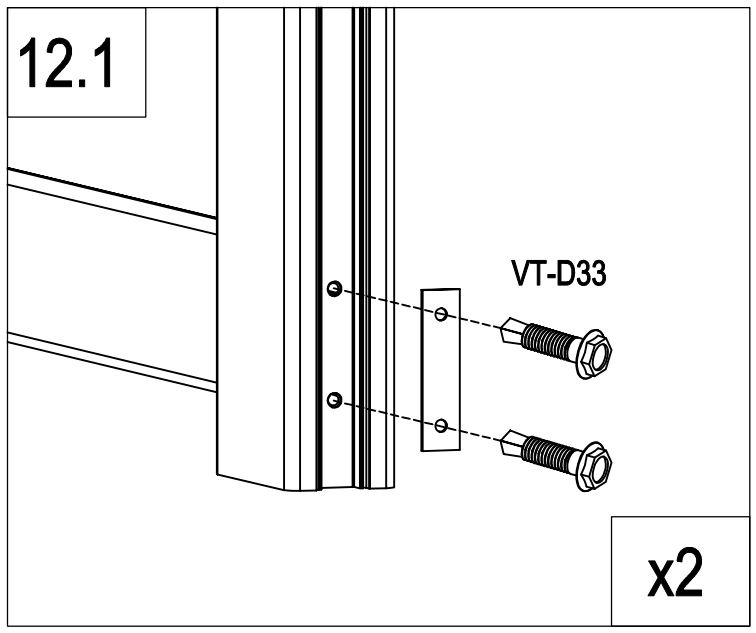

	VT-A1	1
	SR-B3	2
	Dr-28	2
	VT-D33	4

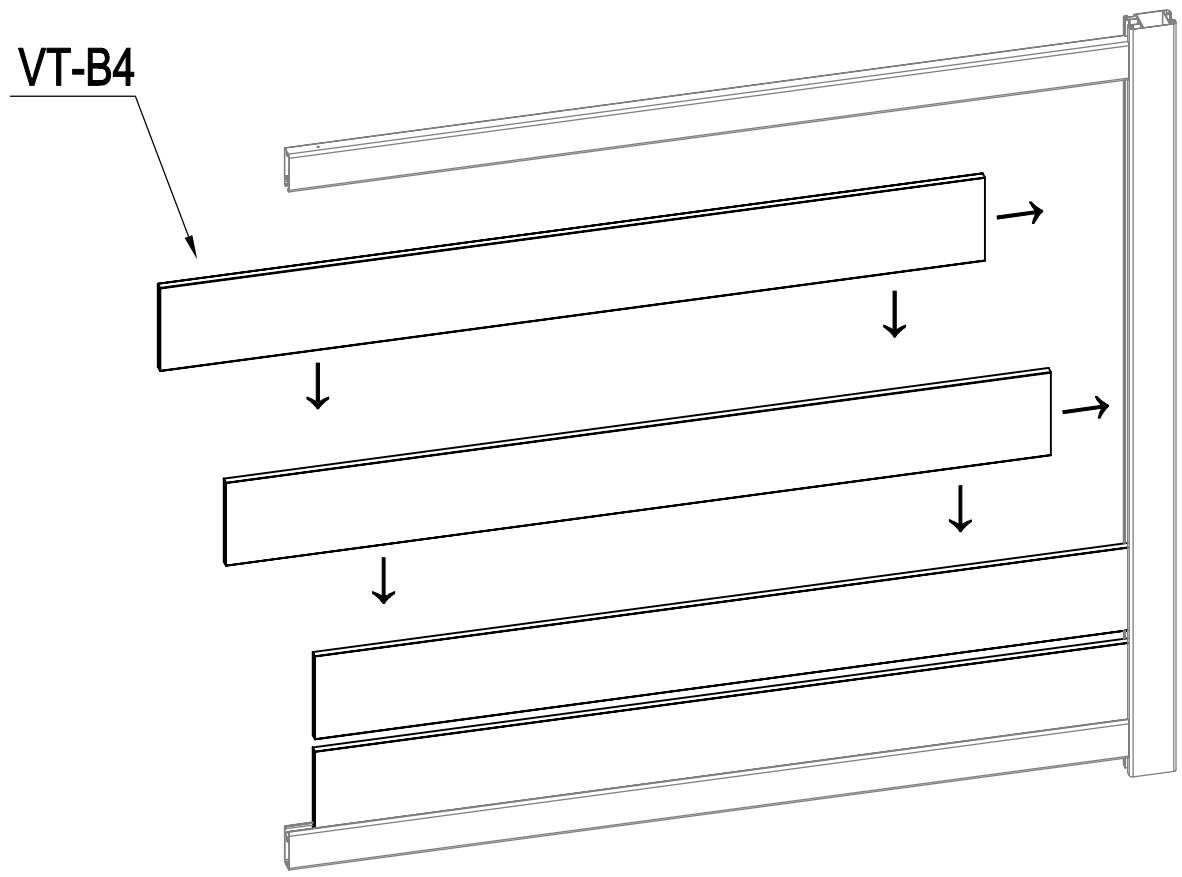

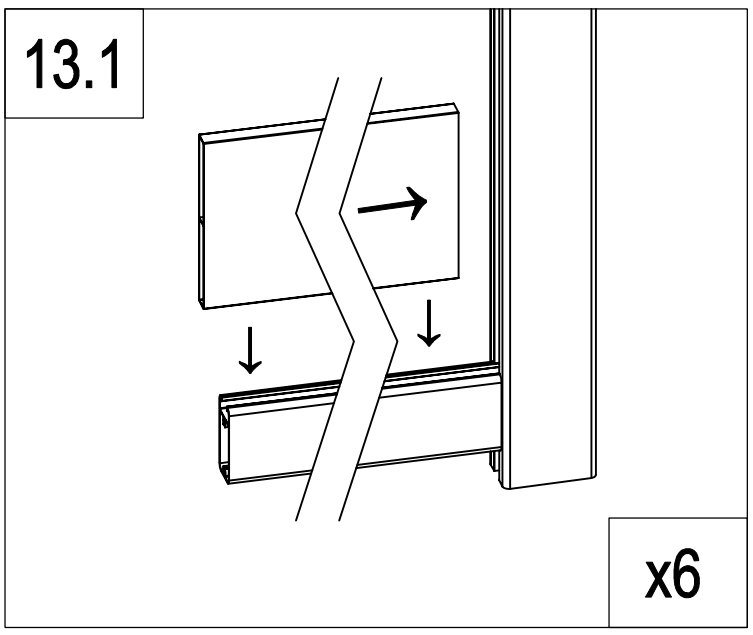

	VT-B4	6

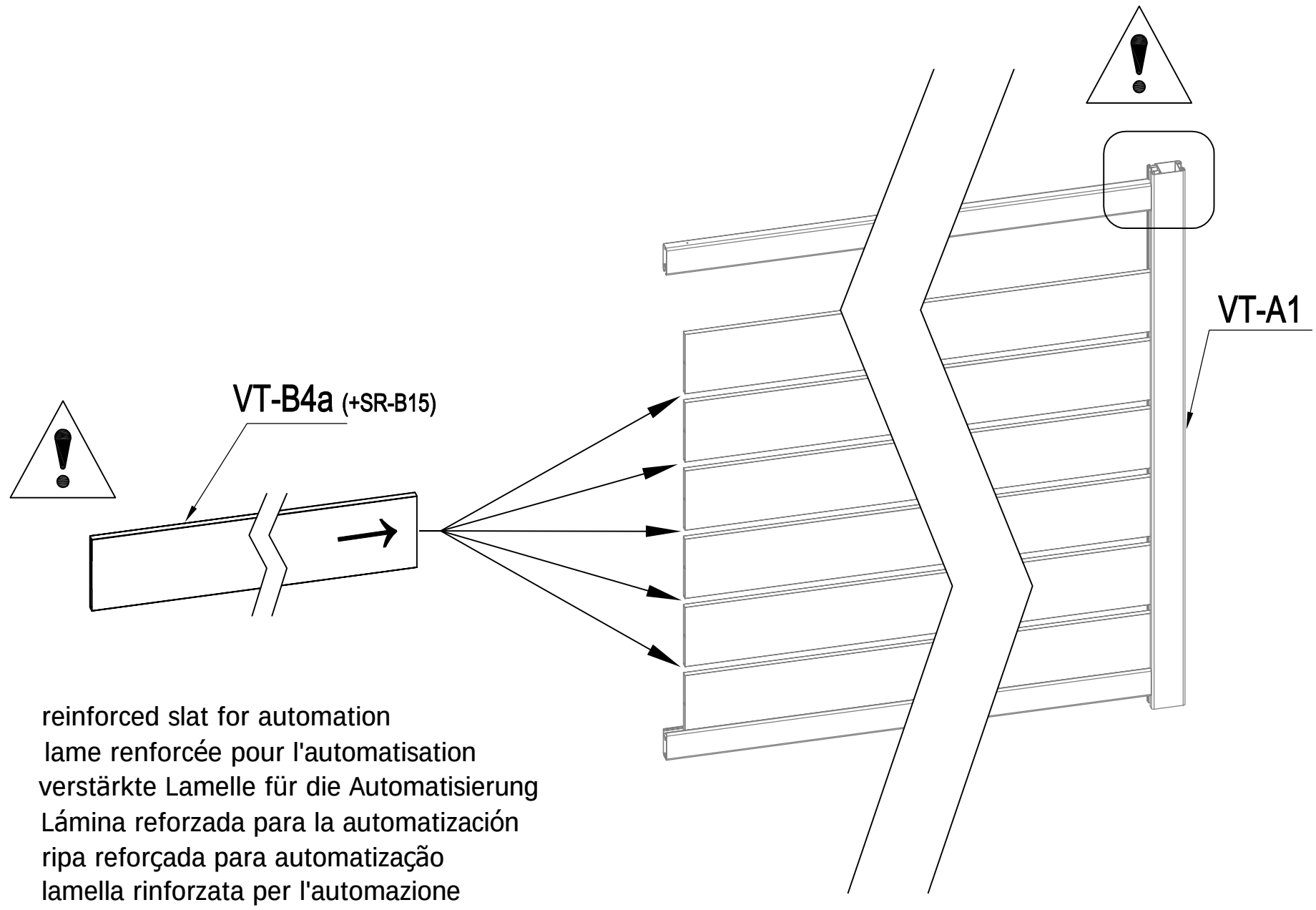

EN: reinforced slat for automation
FR: lame renforcée pour l'automatisation
DE: verstärkte Lamelle für die Automatisierung
ES: Lámina reforzada para la automatización
PT: ripa reforçada para automatização
IT: lamella rinforzata per l'automazione
NL: versterkte lat voor automatisering
PL: wzmocniona listwa do automatyzacji

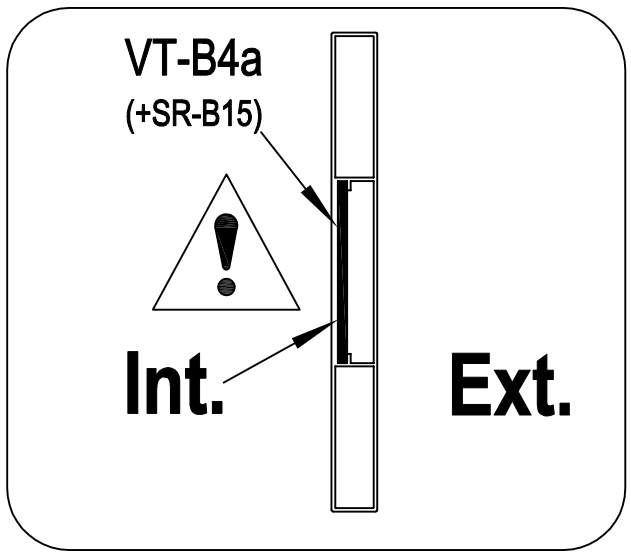

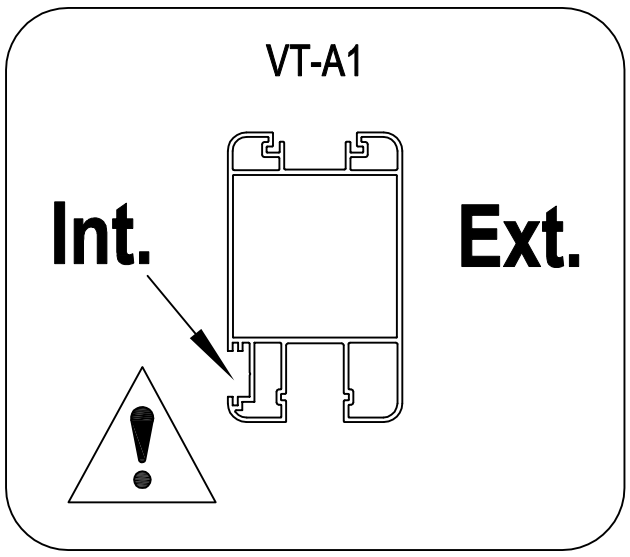

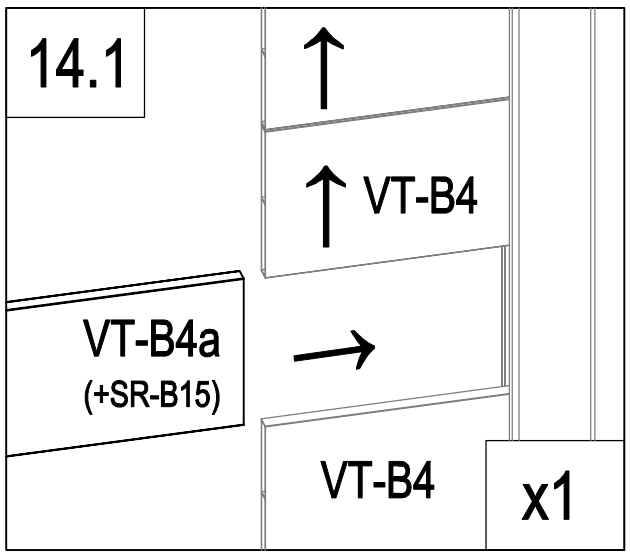

	VT-B4a (+SR-B15)	1

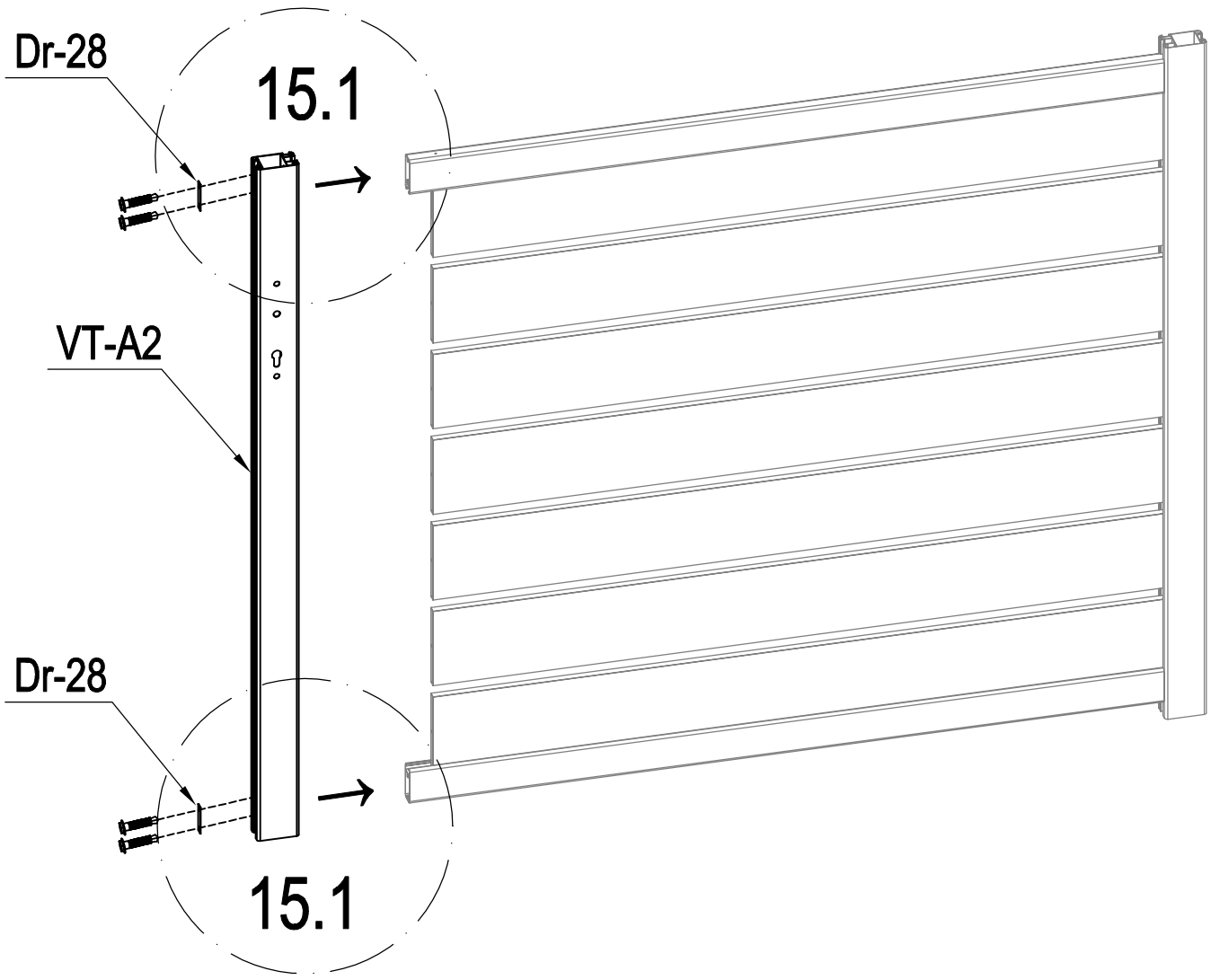

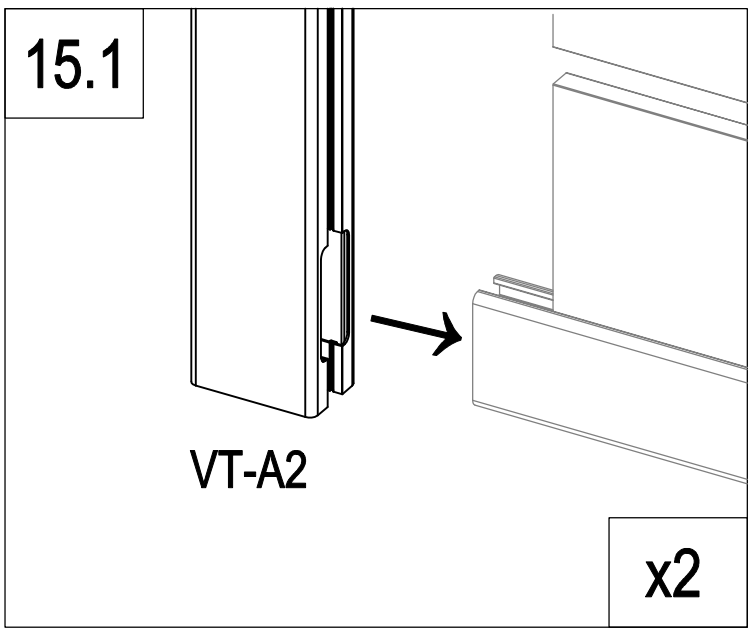

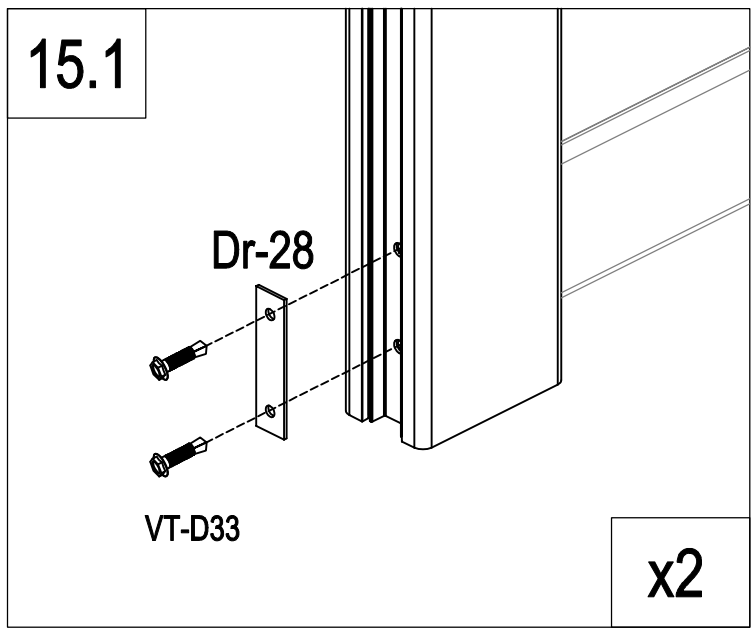

	VT-A2	1
	Dr-28	2
	VT-D33	4

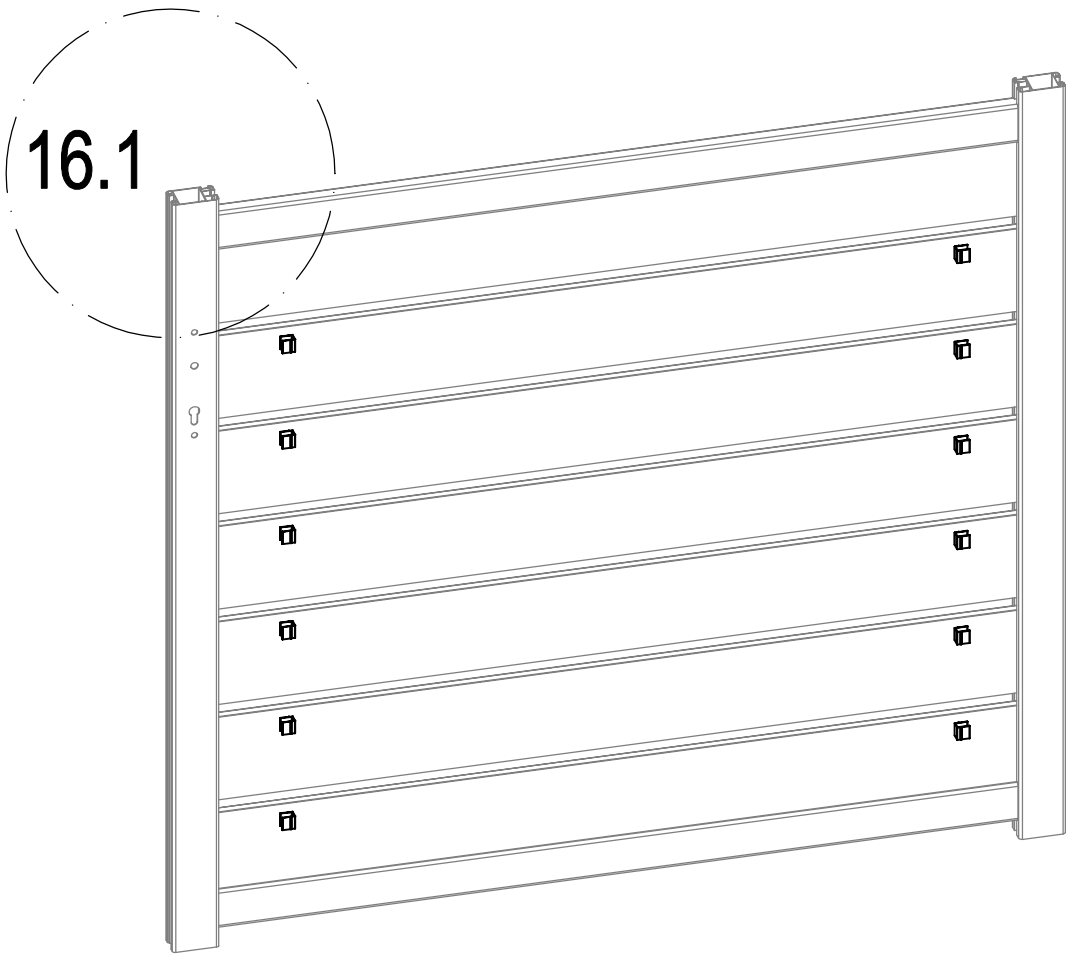

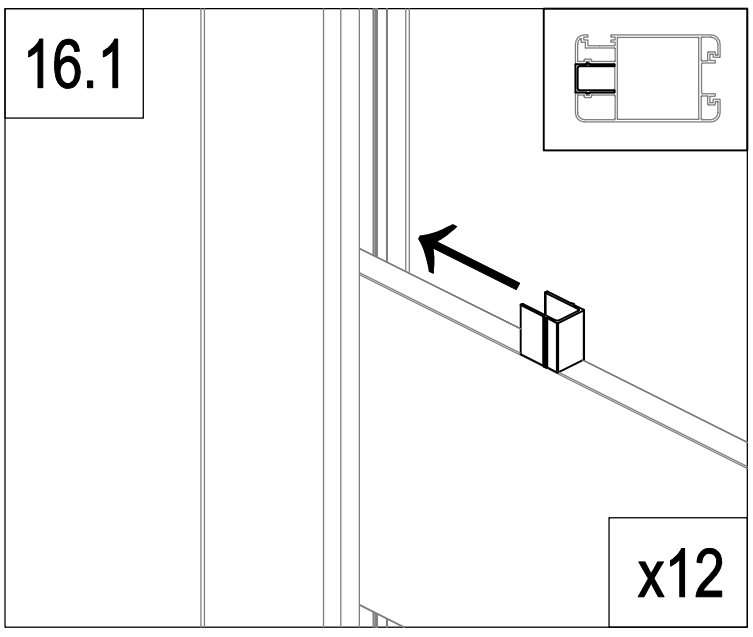

	VT-A6	12

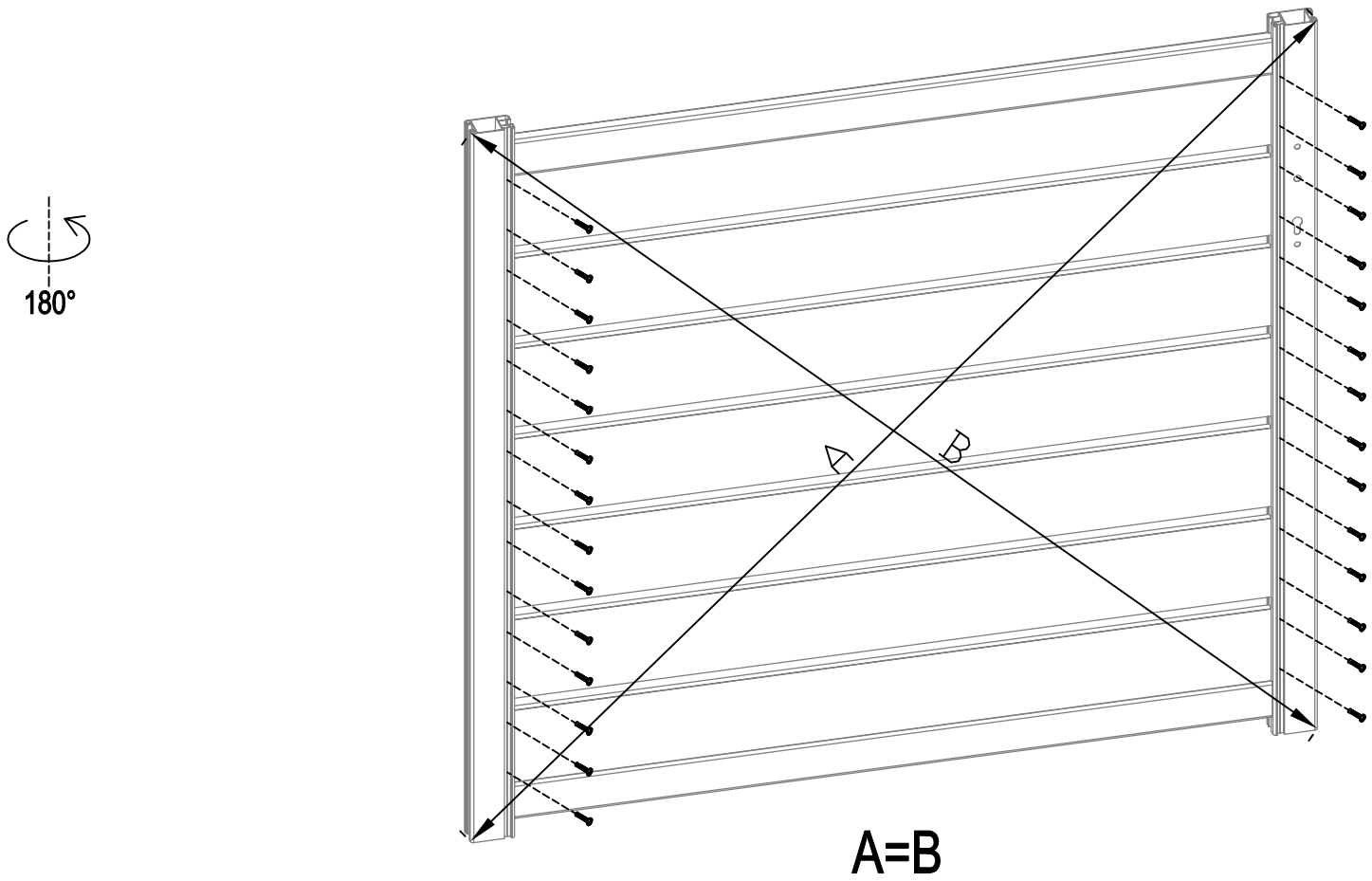

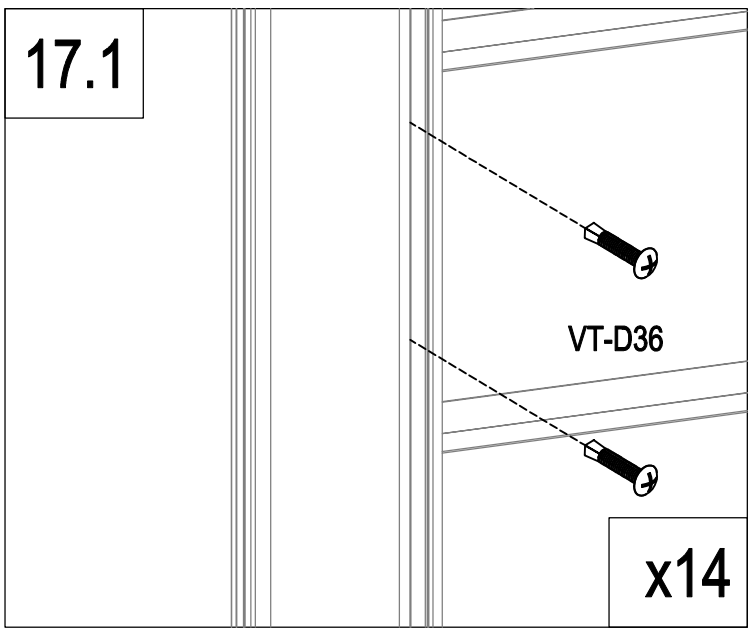

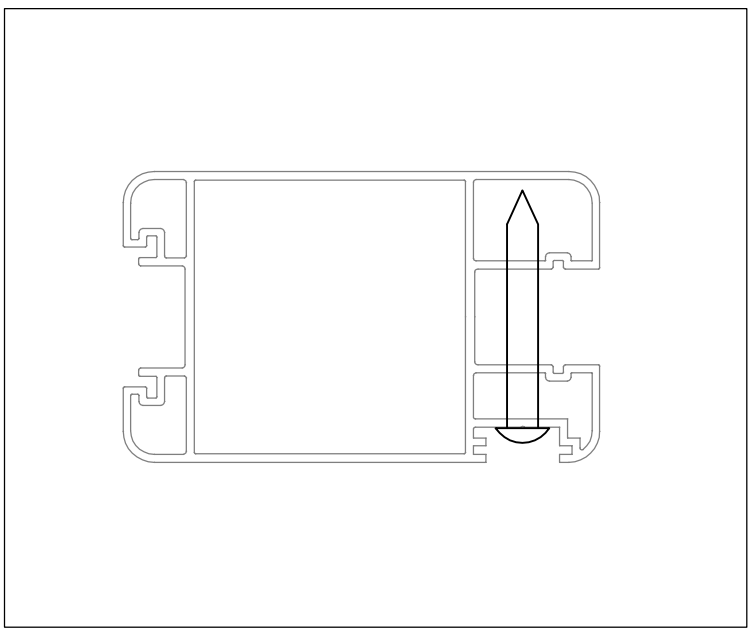

	VT-D36	28

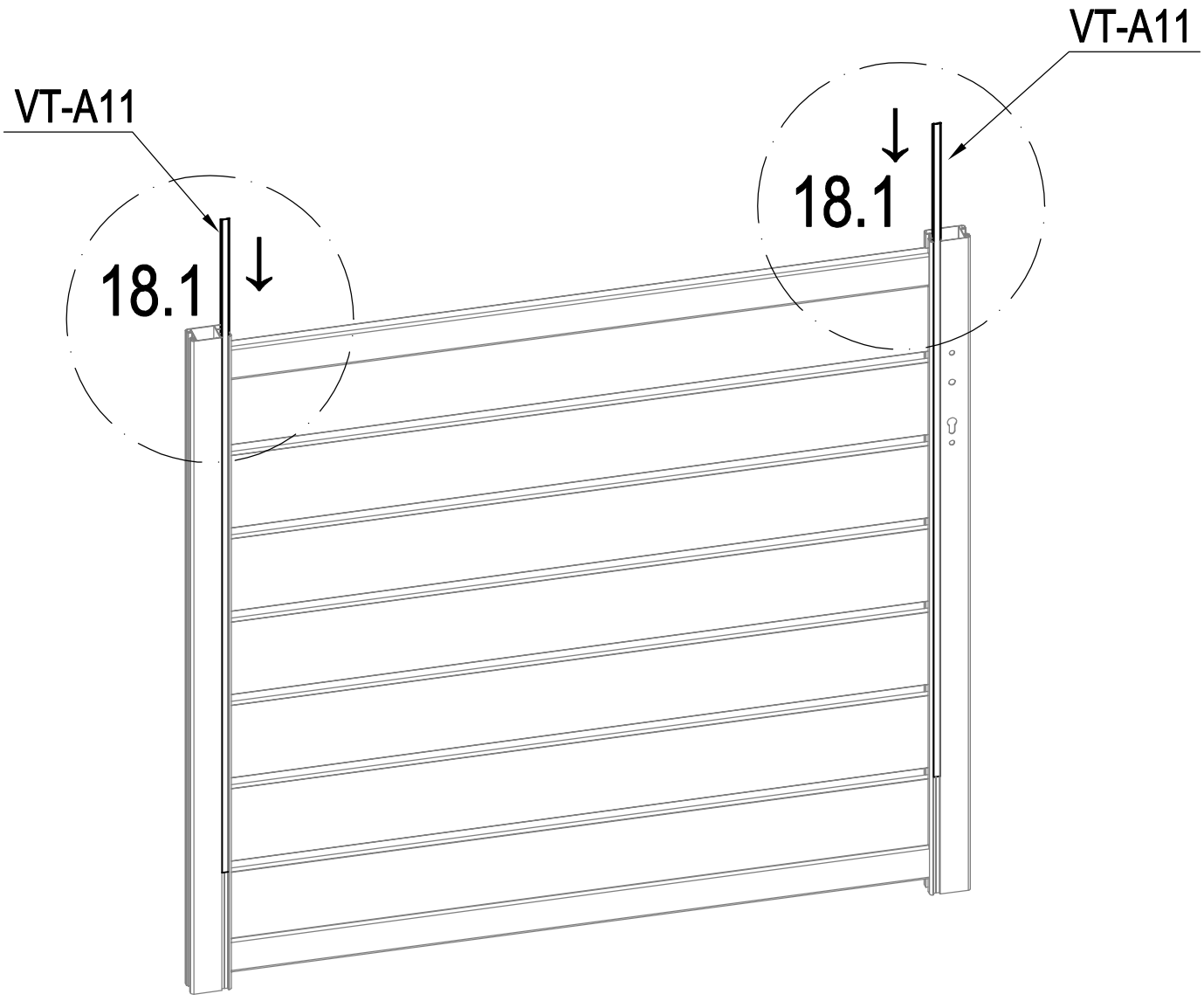

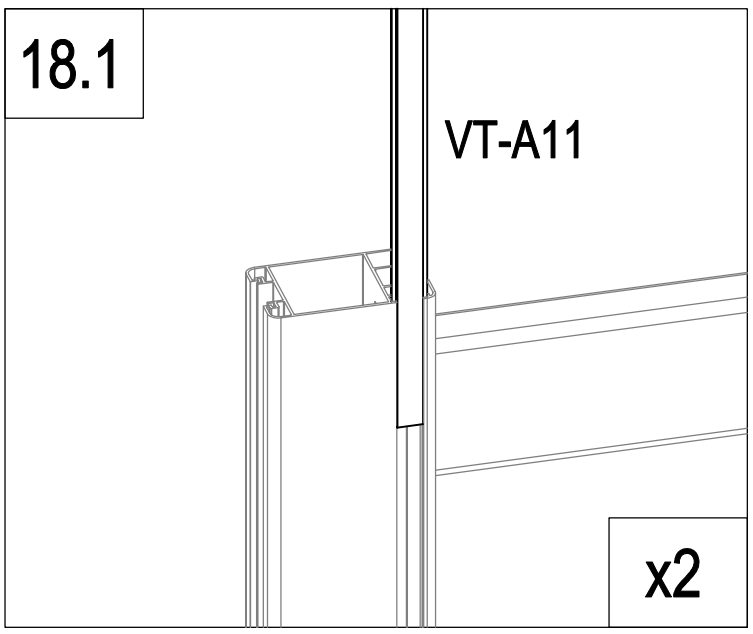

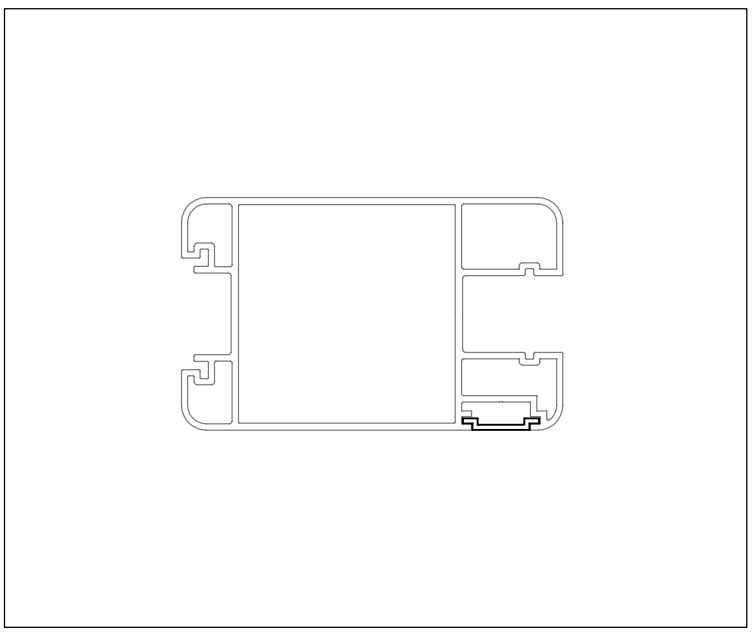

	VT-A11	2

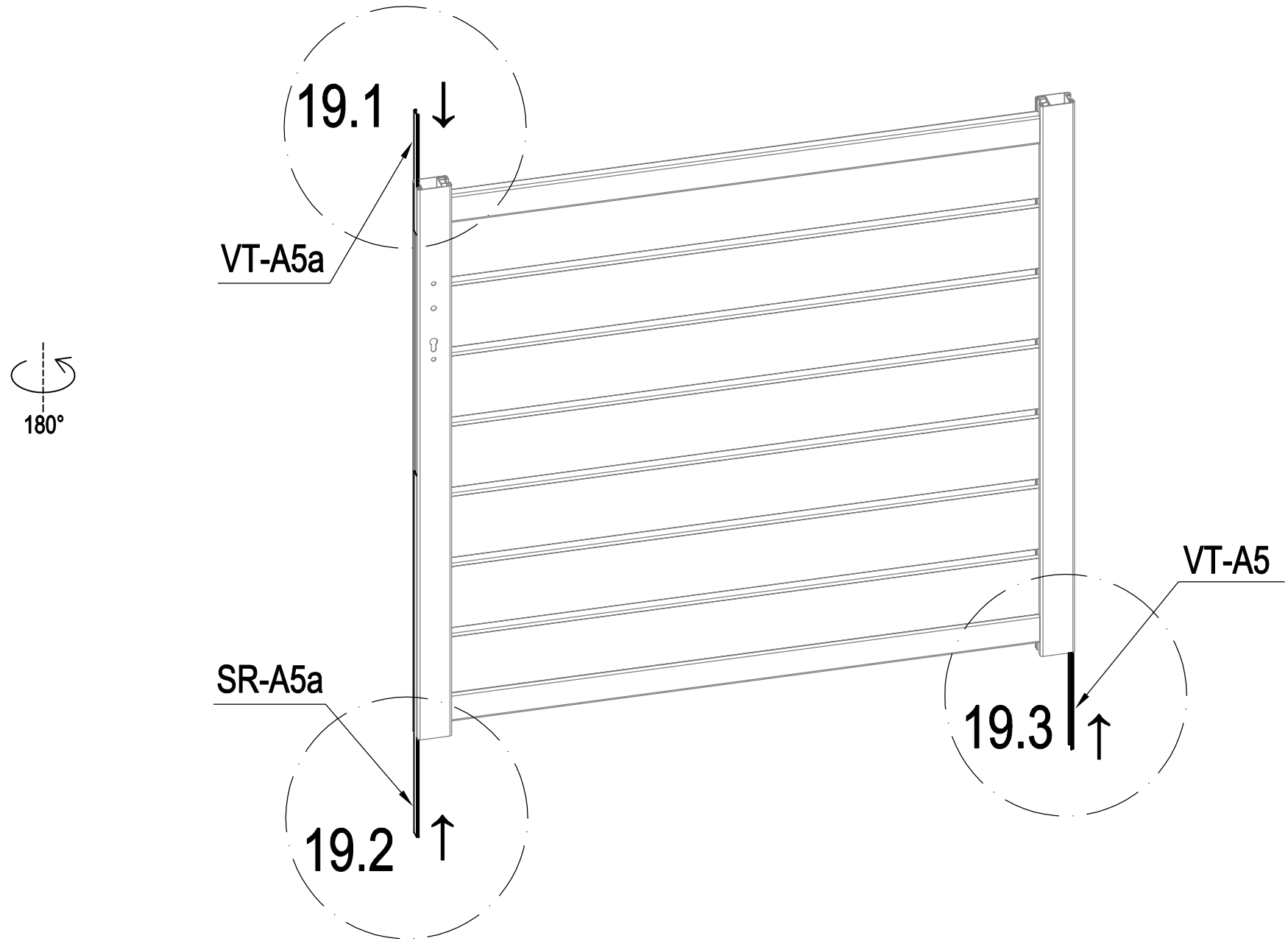

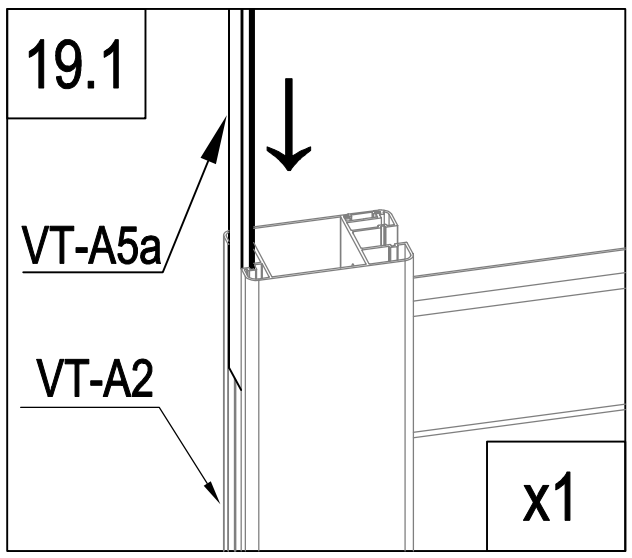

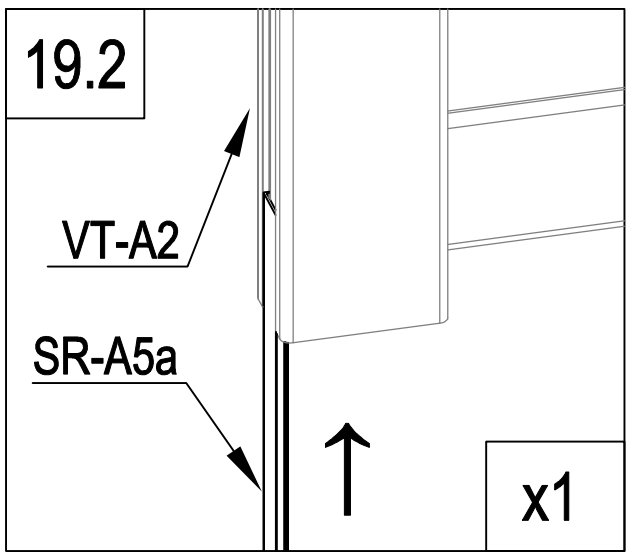

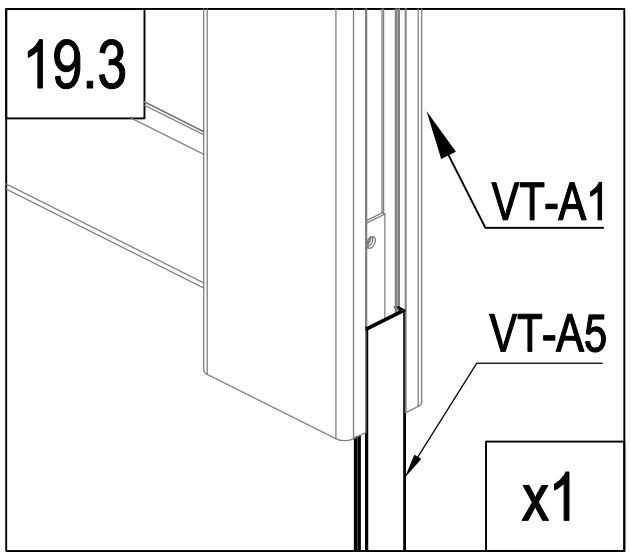

	VT-A5	1
	VT-A5a	1
	SR-A5a	1

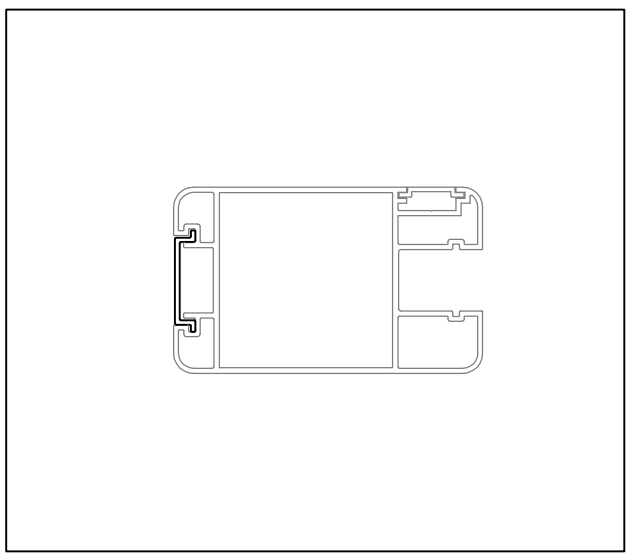

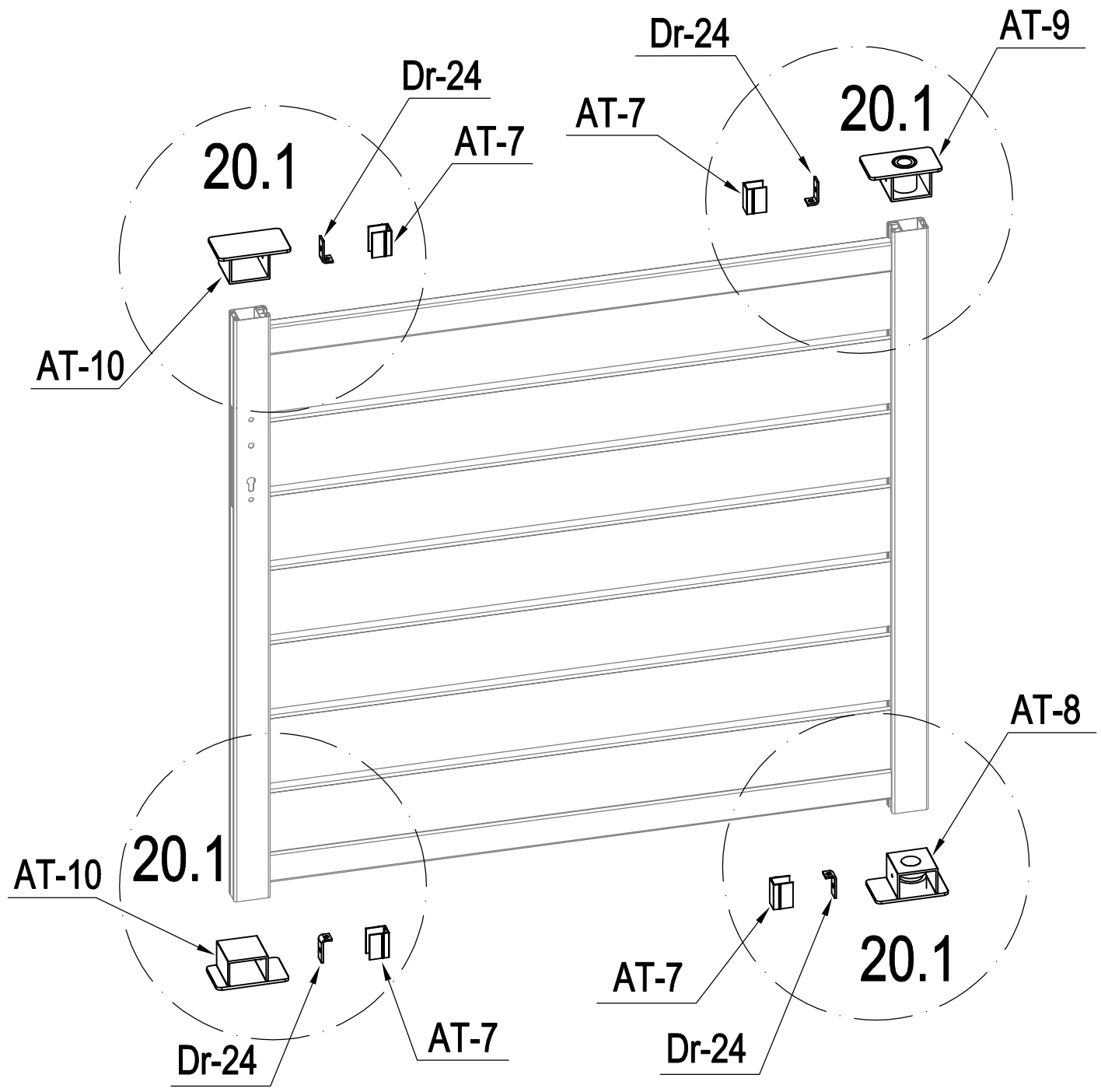

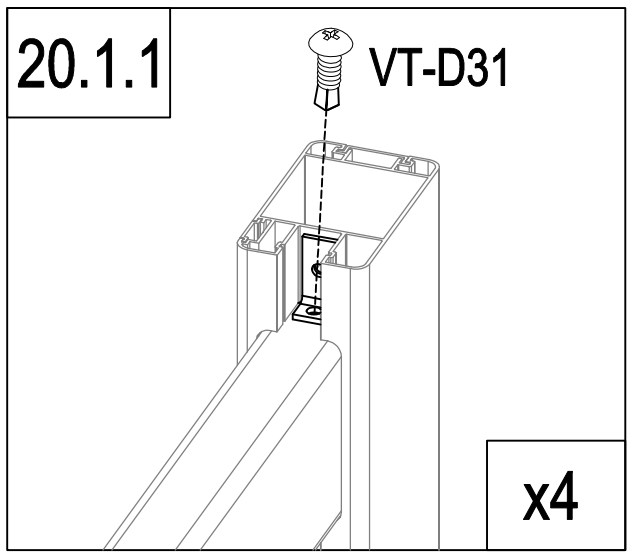

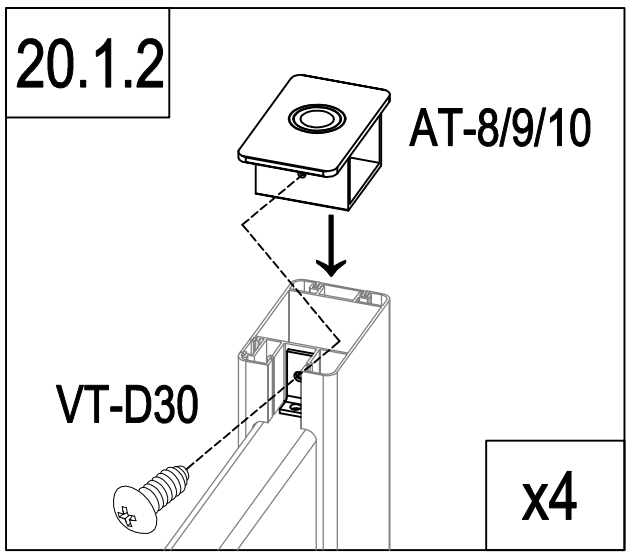

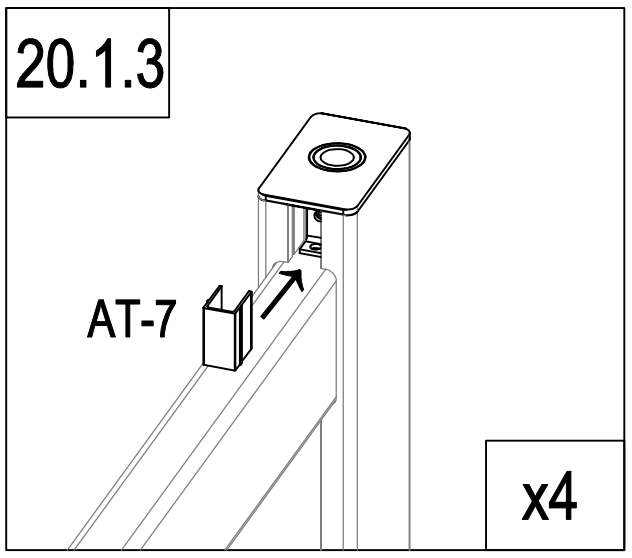

	AT-8	1
	AT-9	1
	AT-10	2
	Dr-24	4

	AT-7	4
	VT-D30	4
	VT-D31	4

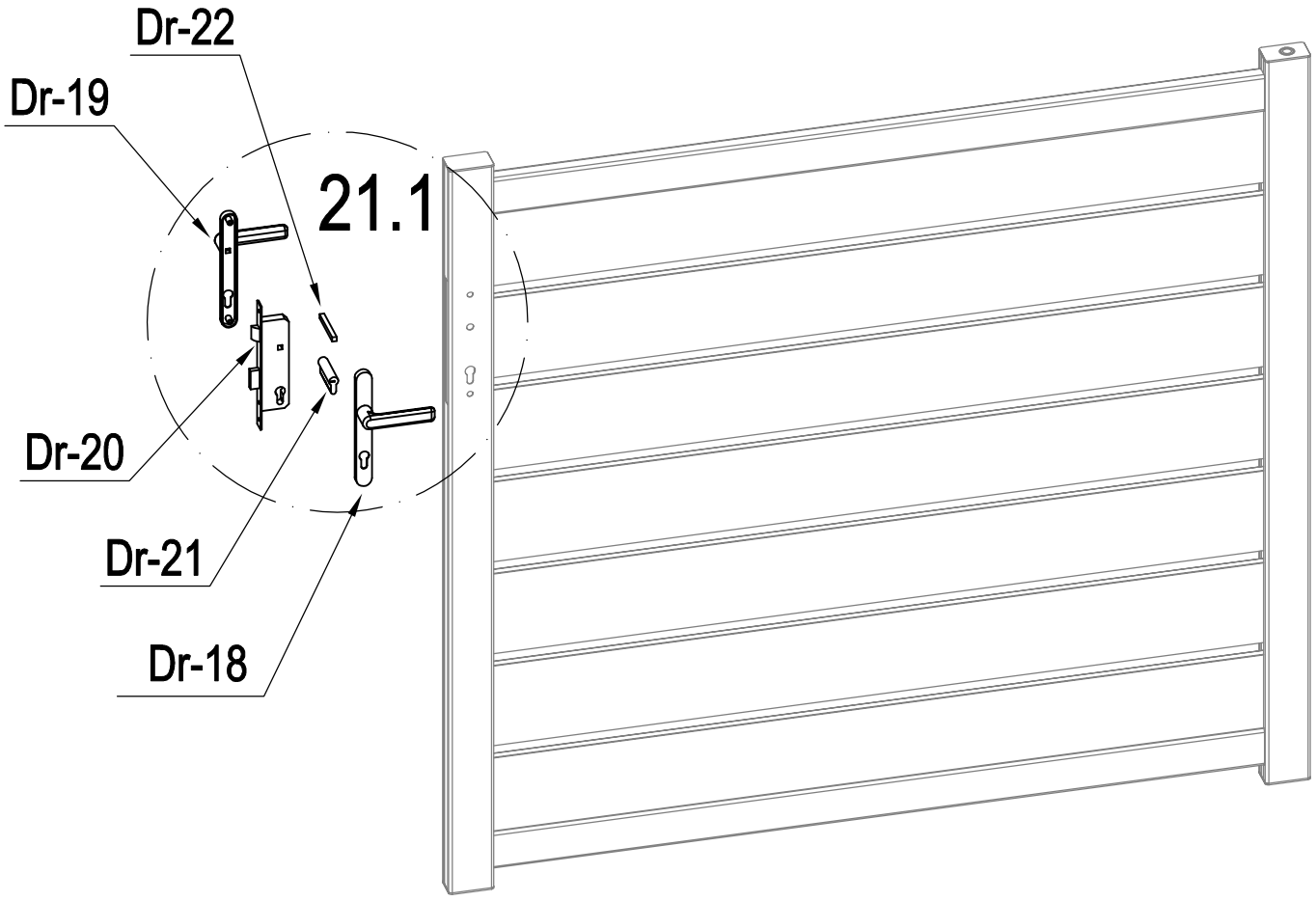

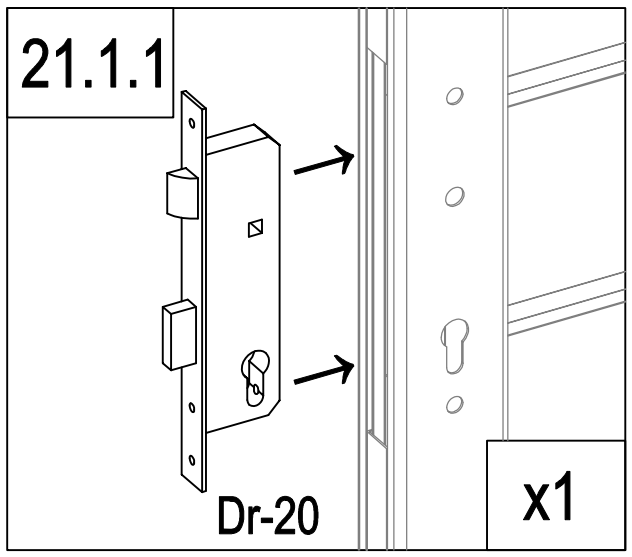

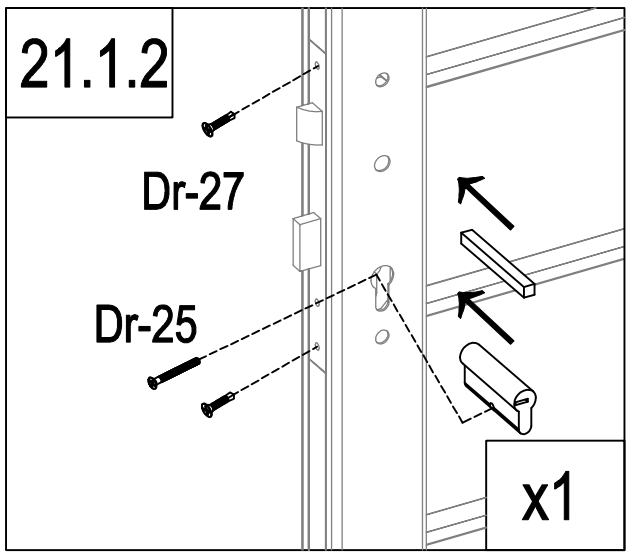

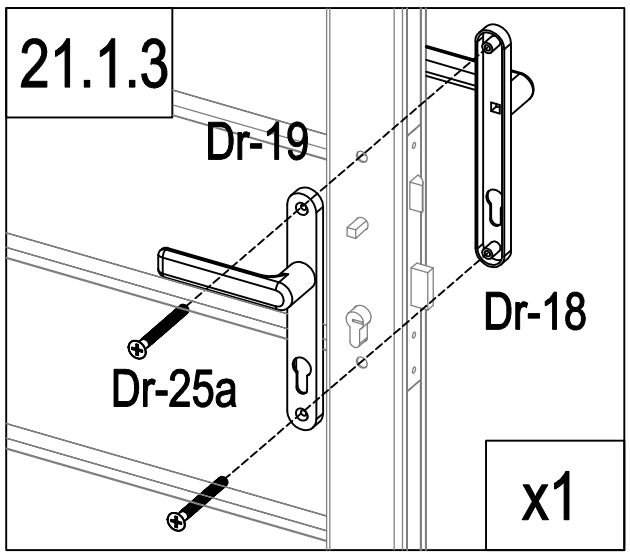

	Dr-20	1
	Dr-21	1
	Dr-22	1
	Dr-25	1

	Dr-18	1
	Dr-19	1
	Dr-25a	2
	Dr-27	2

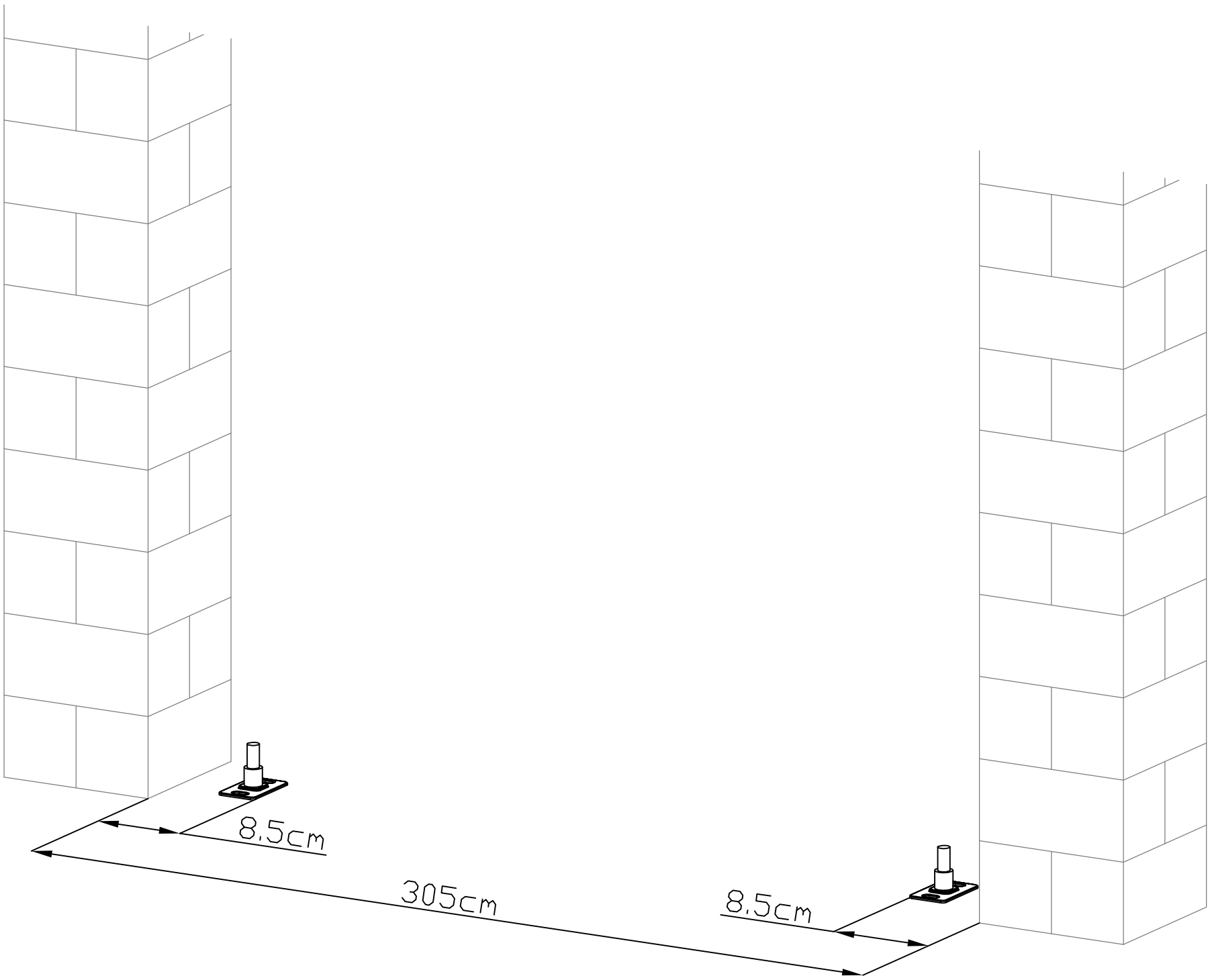

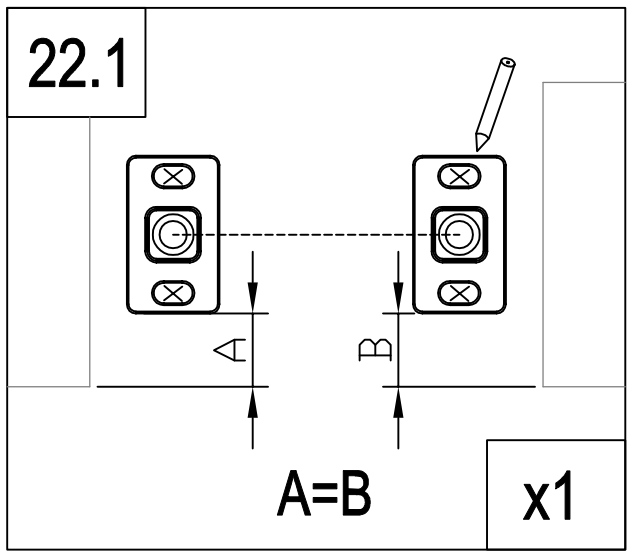

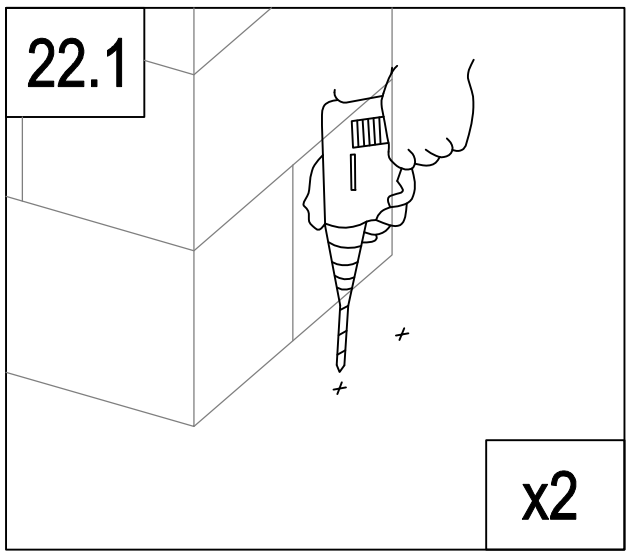

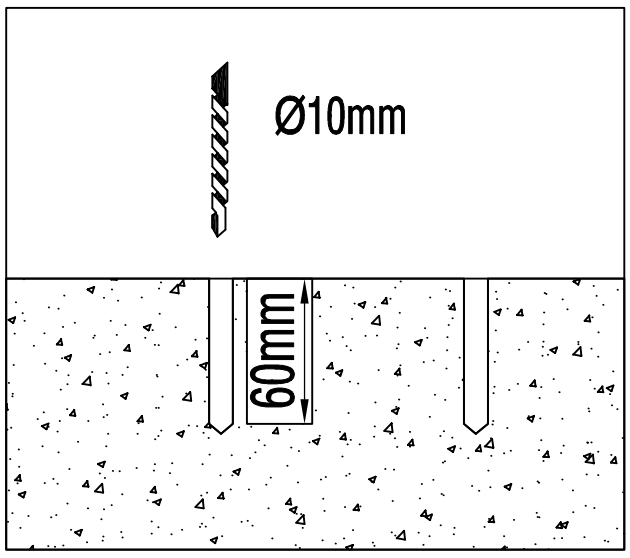

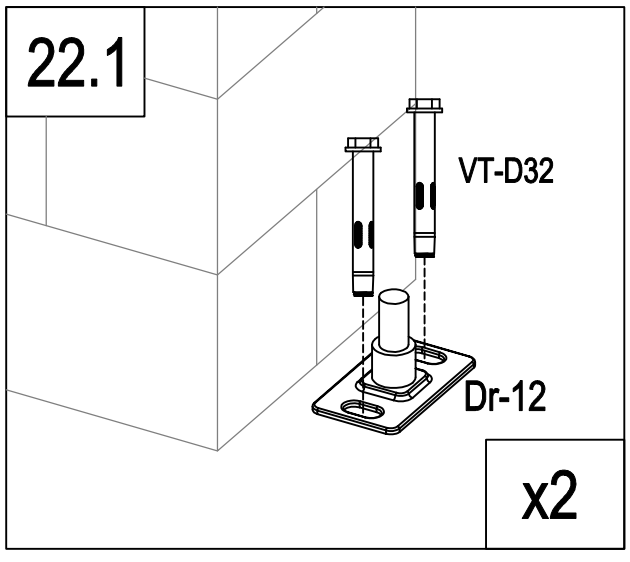

	Dr-12	2
	VT-D32	4

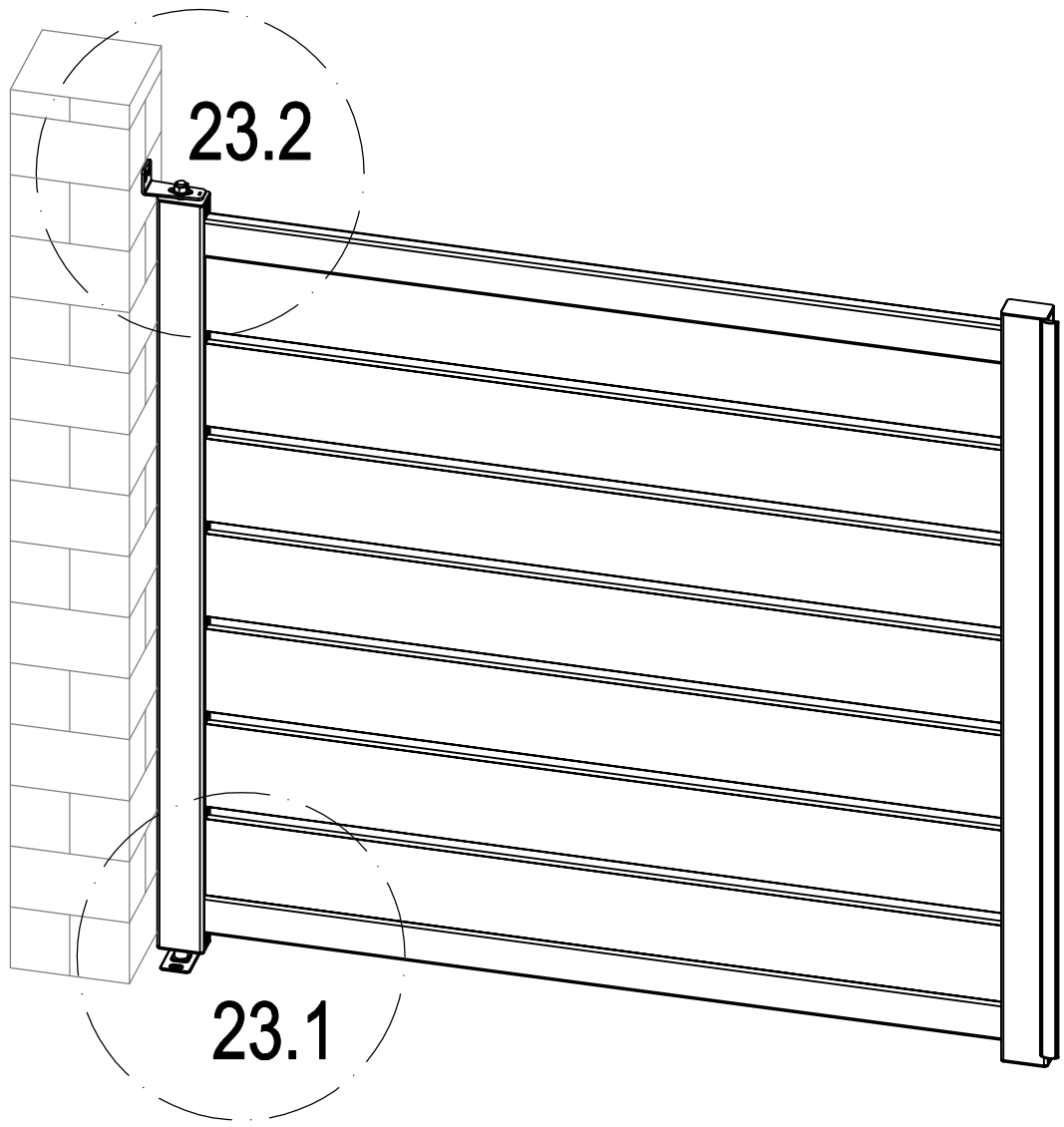

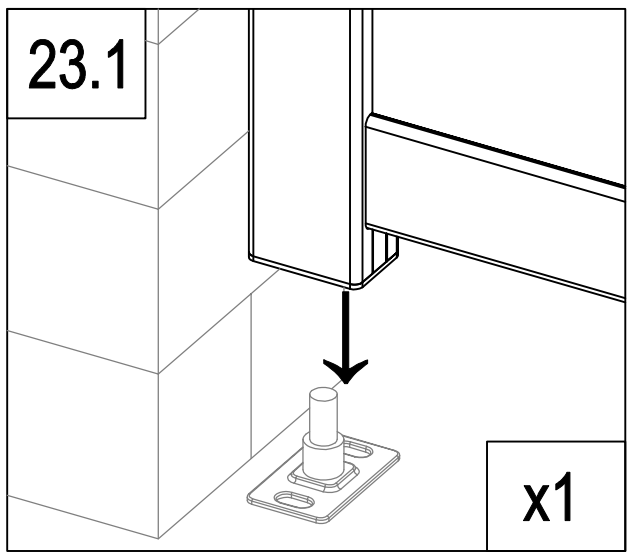

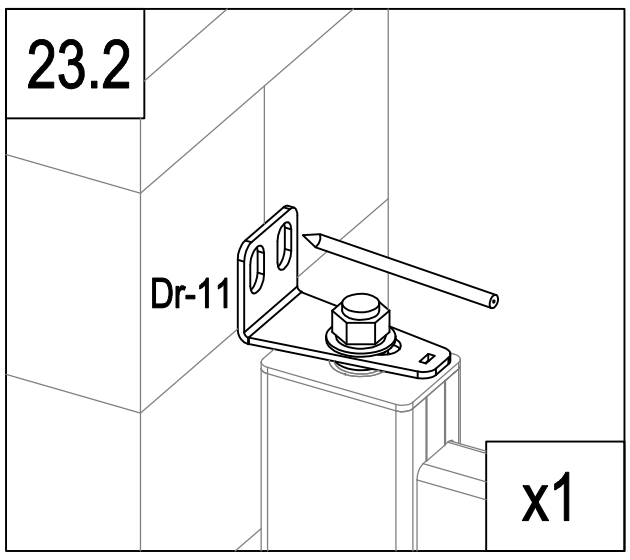

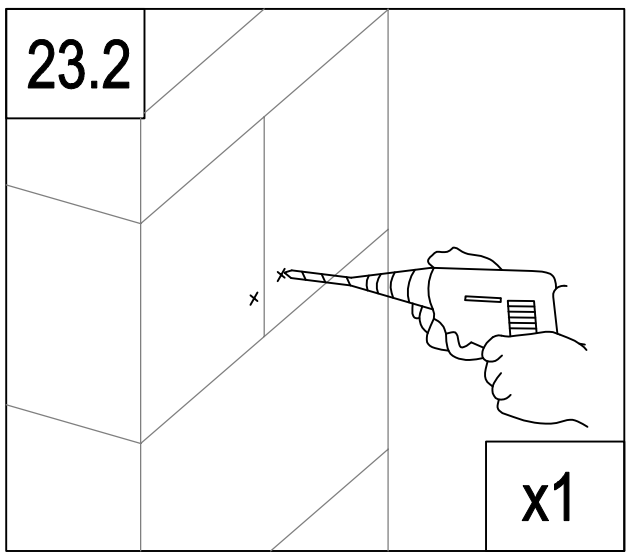

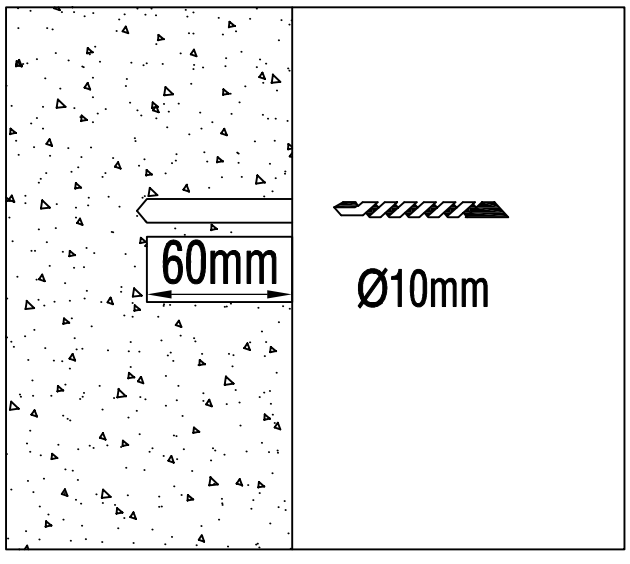

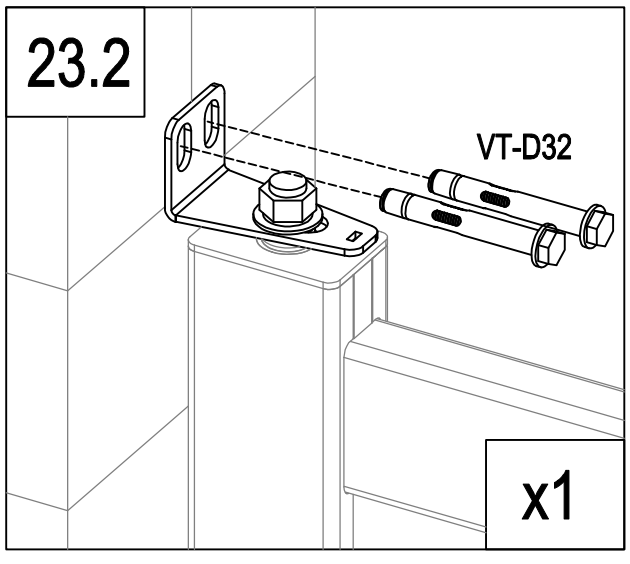

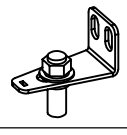	Dr-11	1
	VT-D32	2

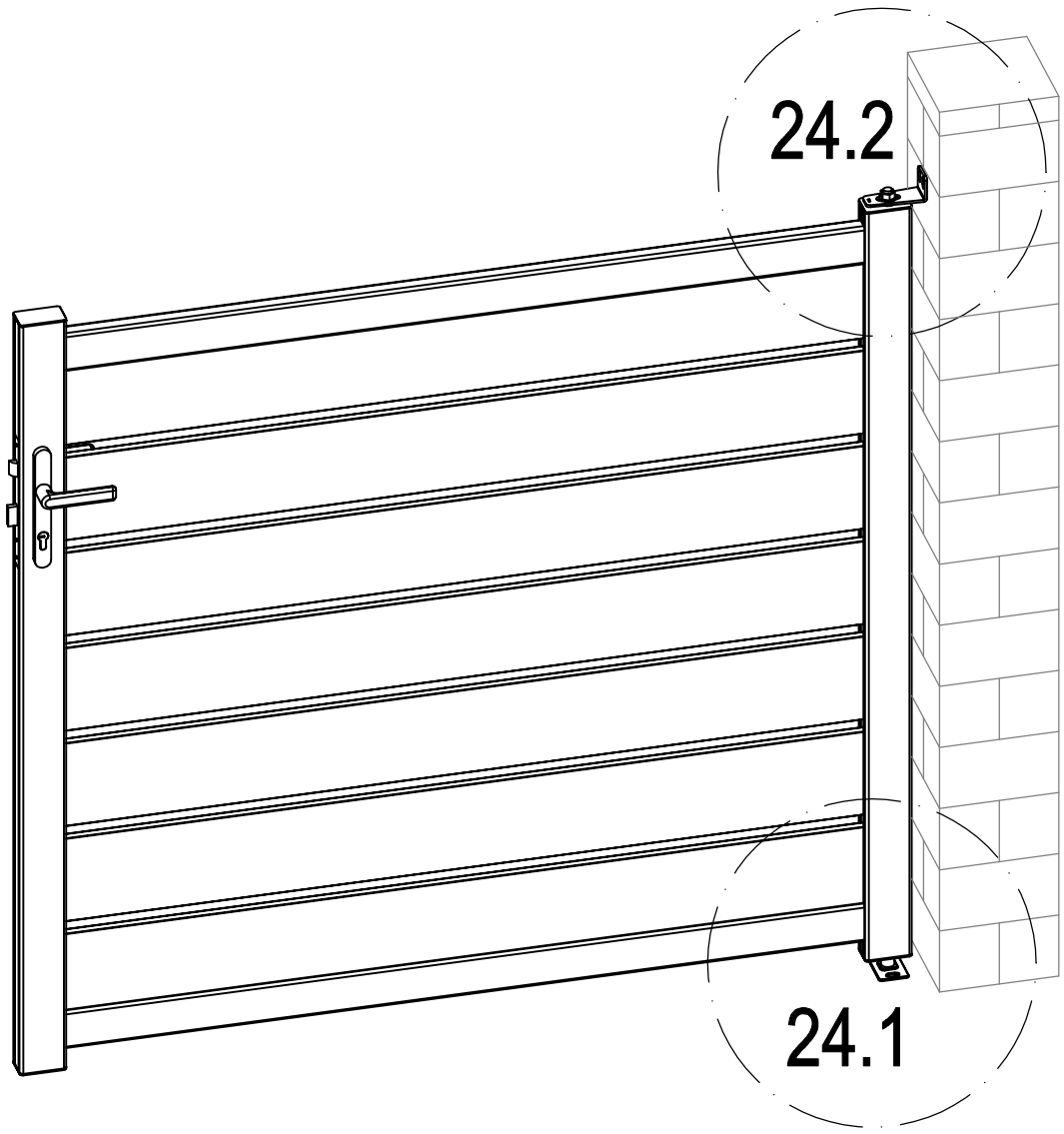

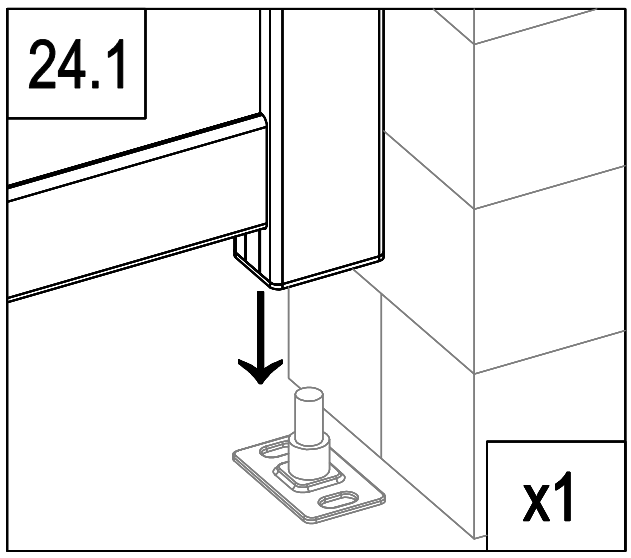

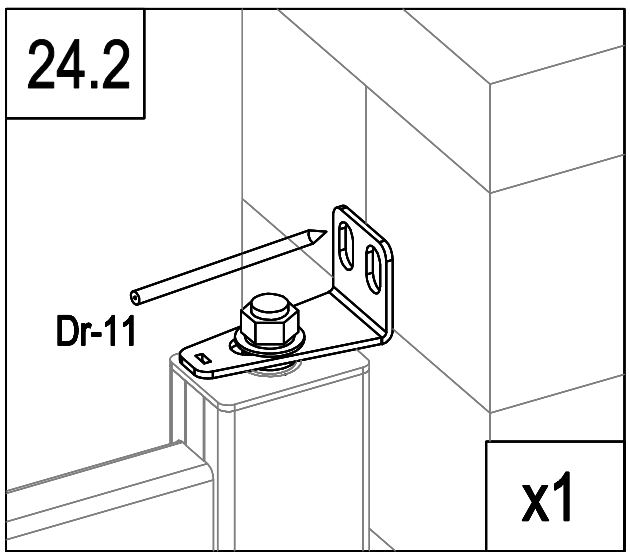

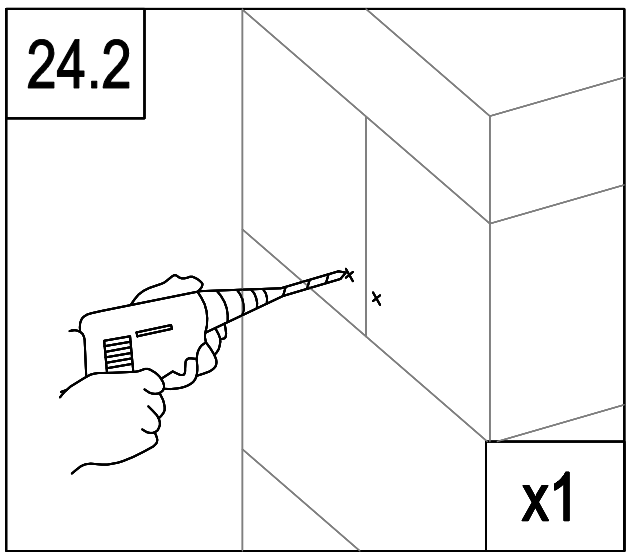

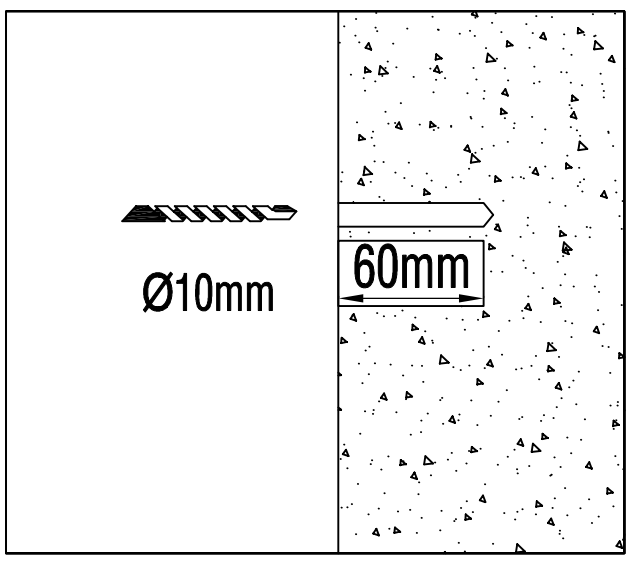

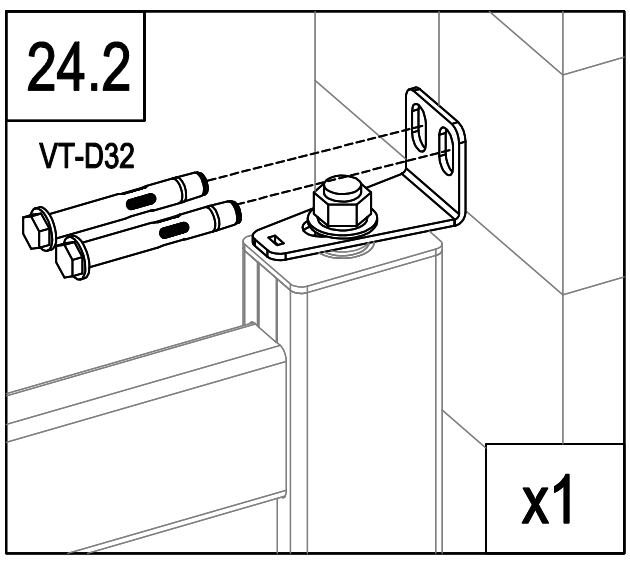

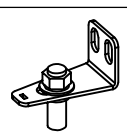	Dr-11	1
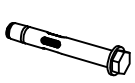	VT-D32	2

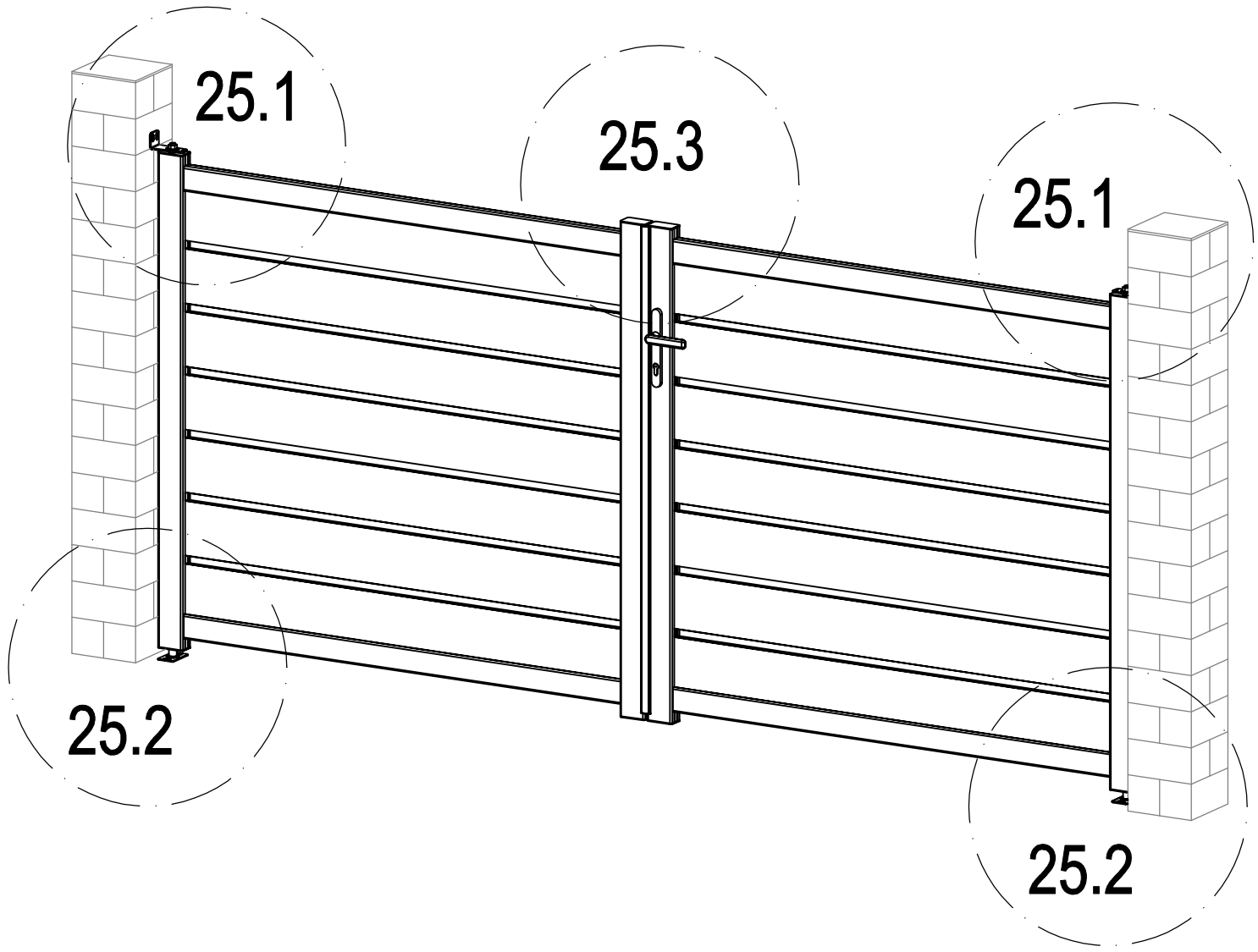

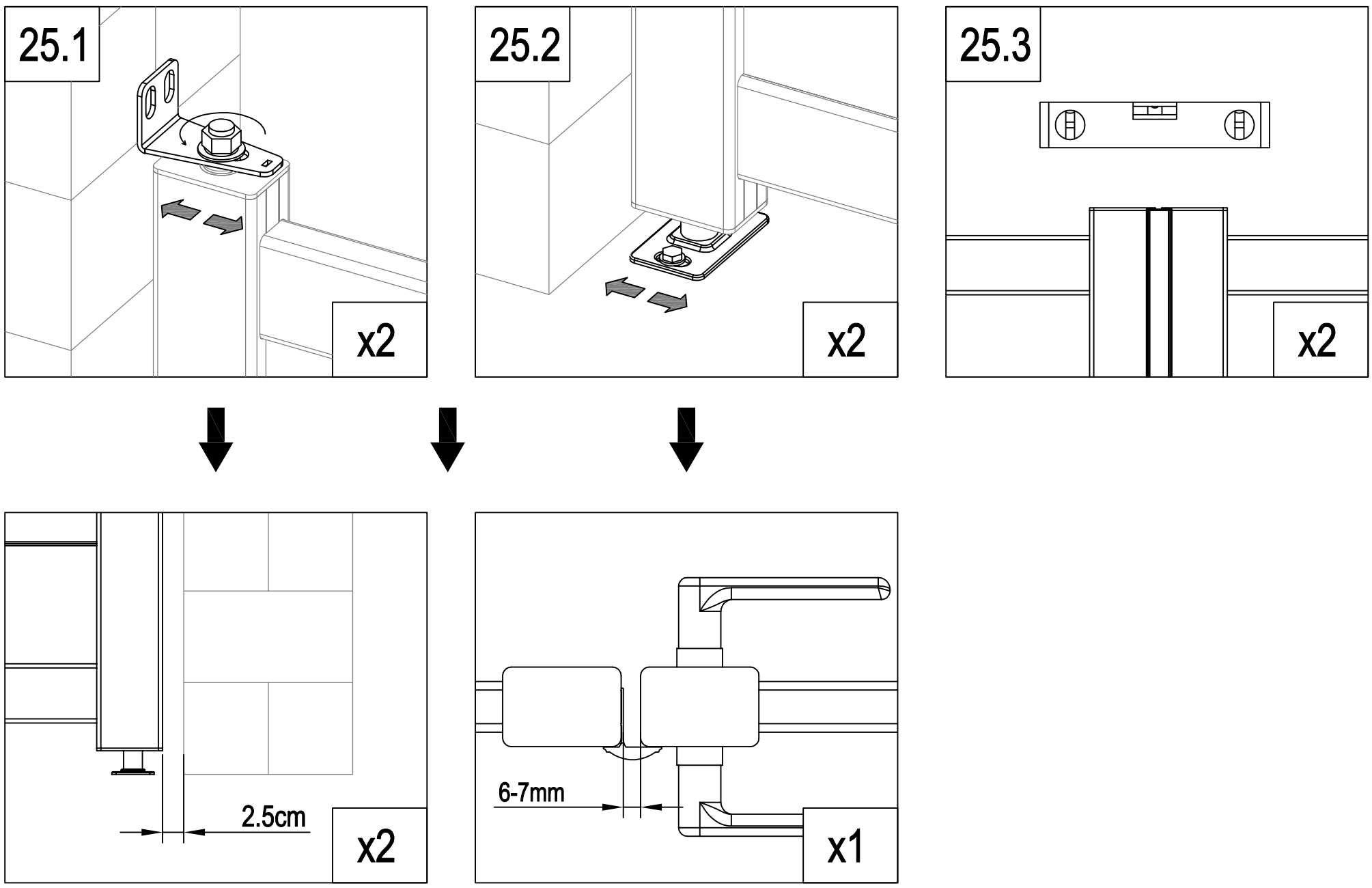

25

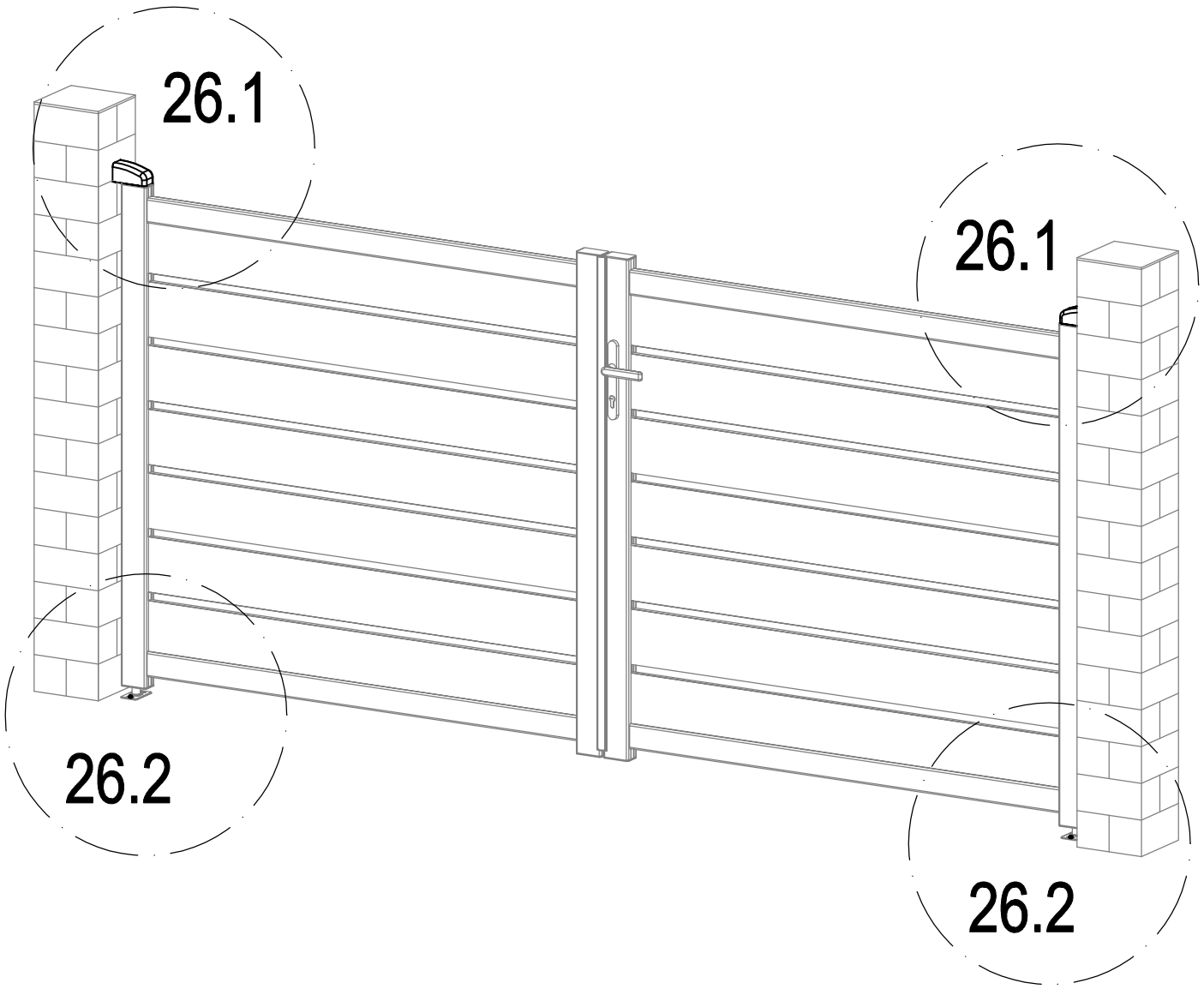

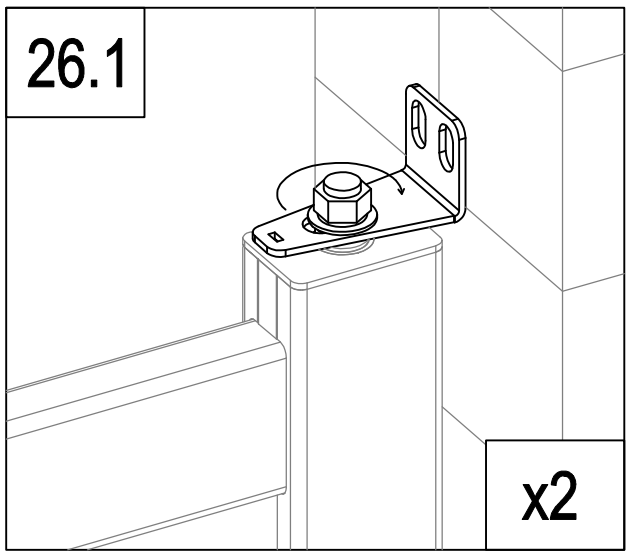

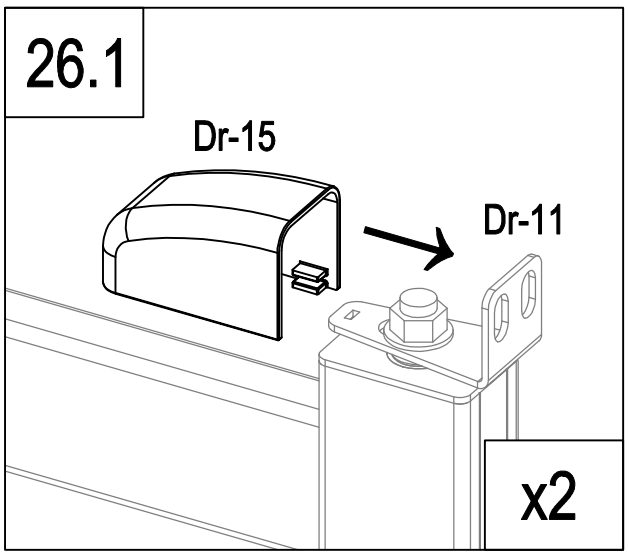

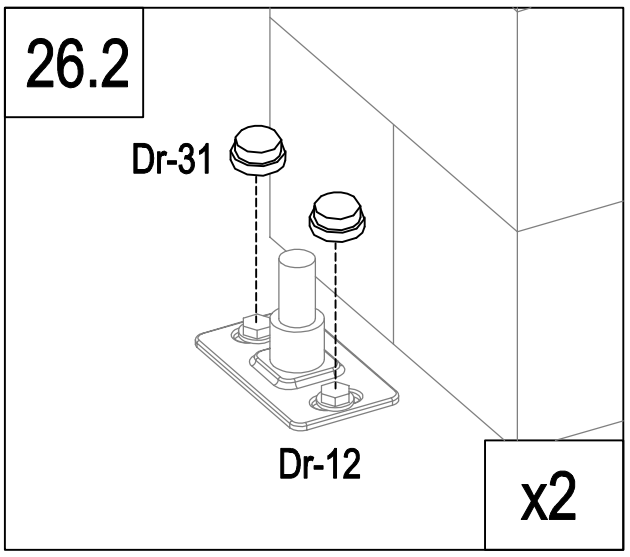

	Dr-15	2
	Dr-31	4

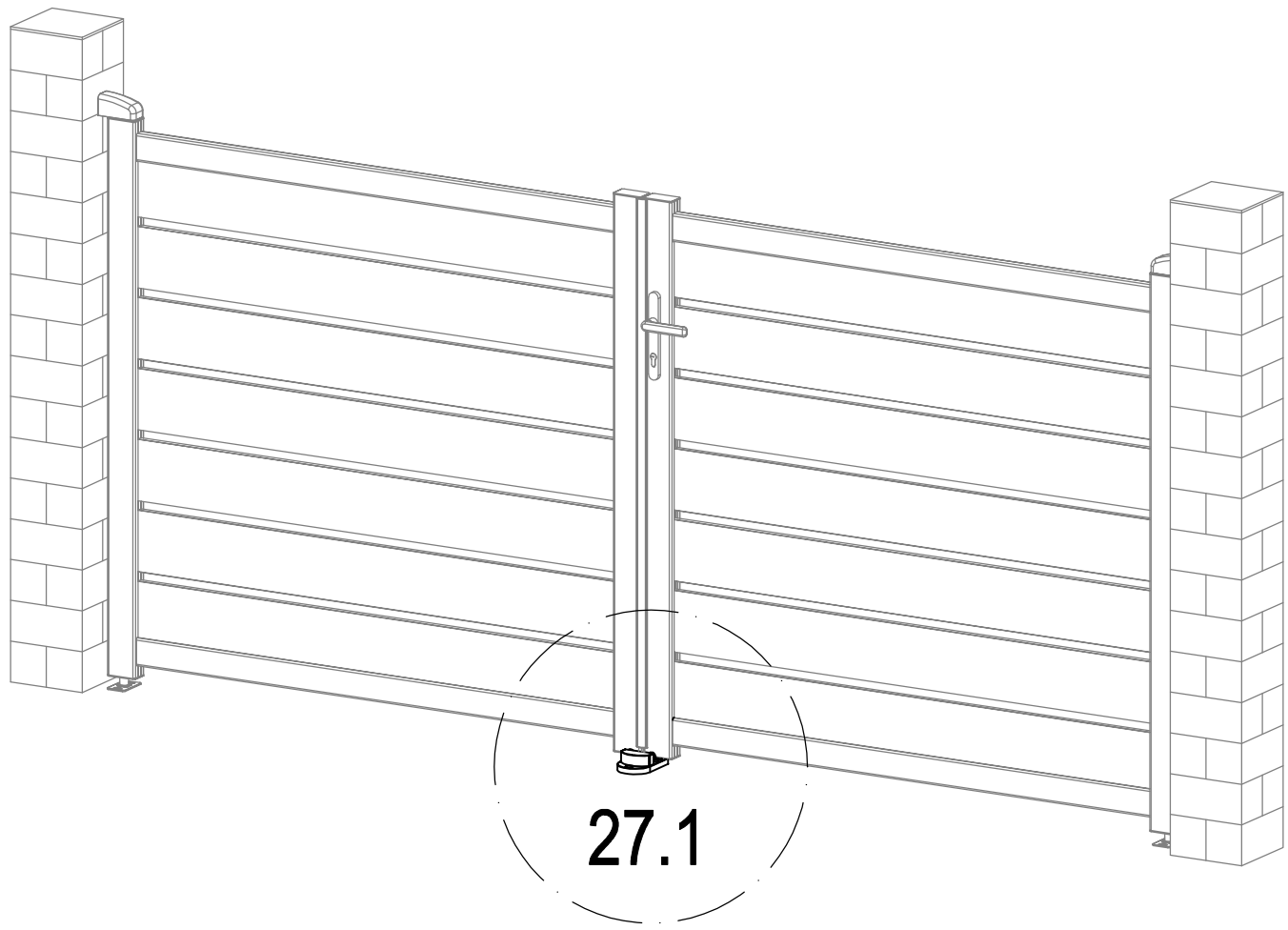

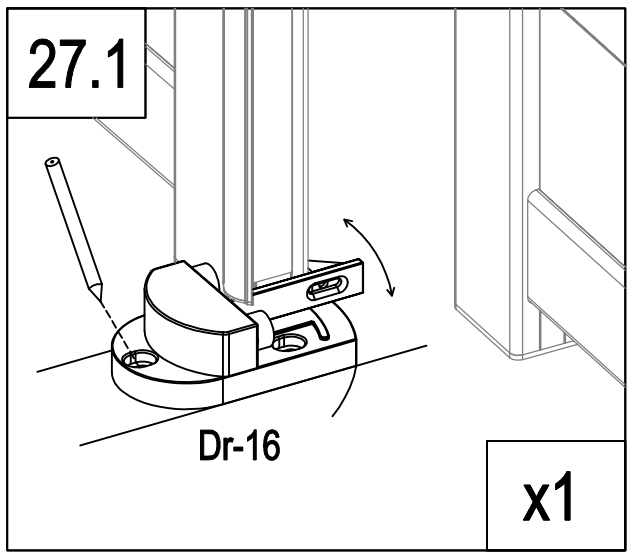

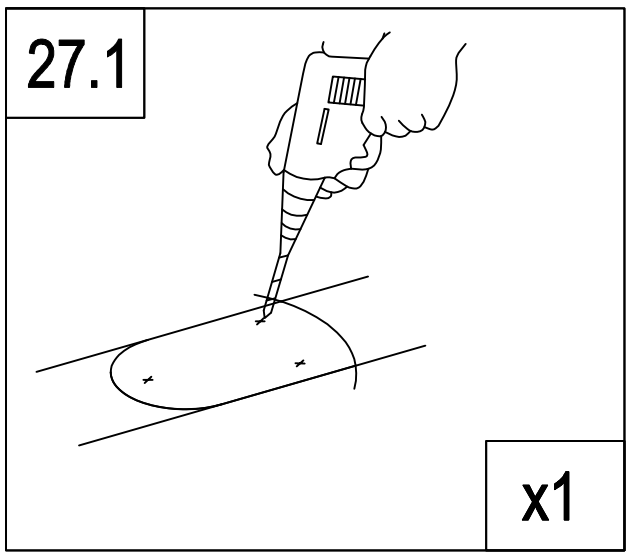

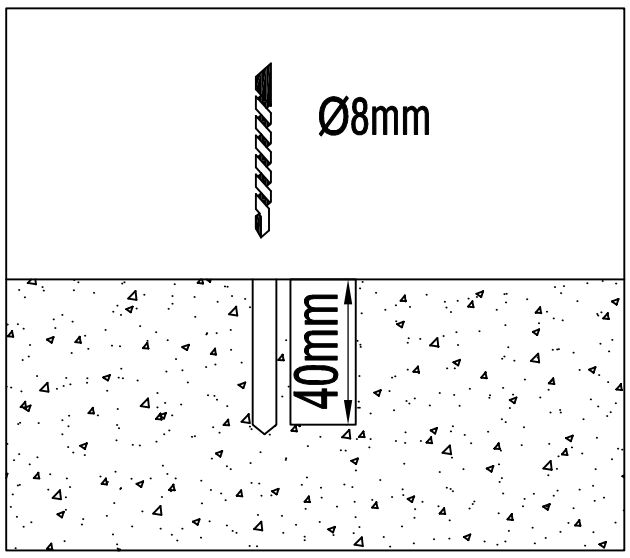

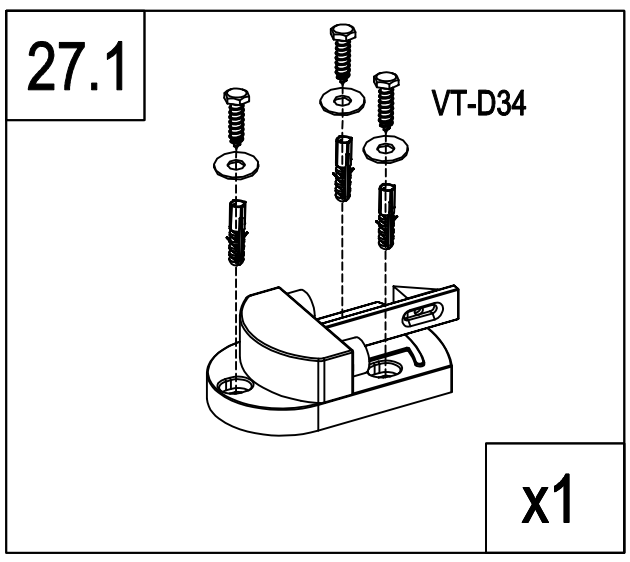

	Dr-16	1
	VT-D34	3
	VT-D35	3

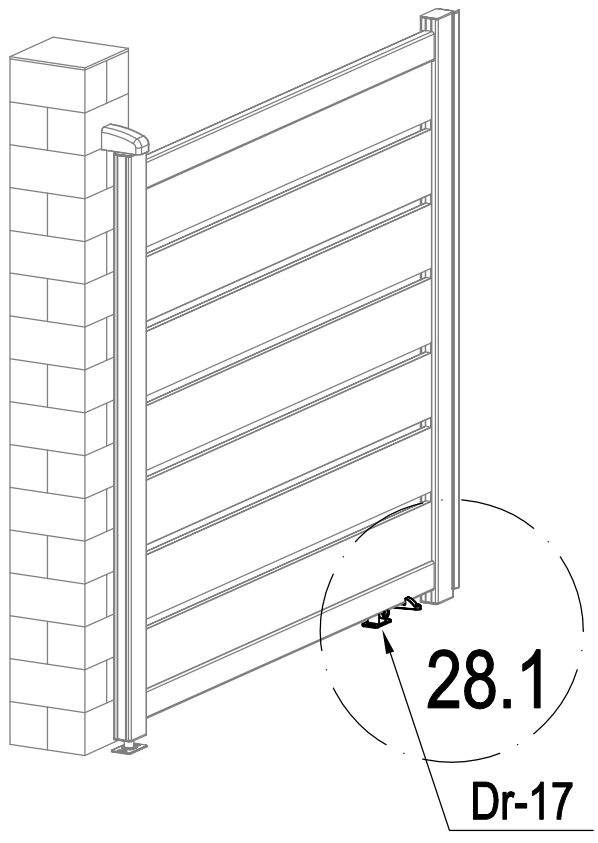

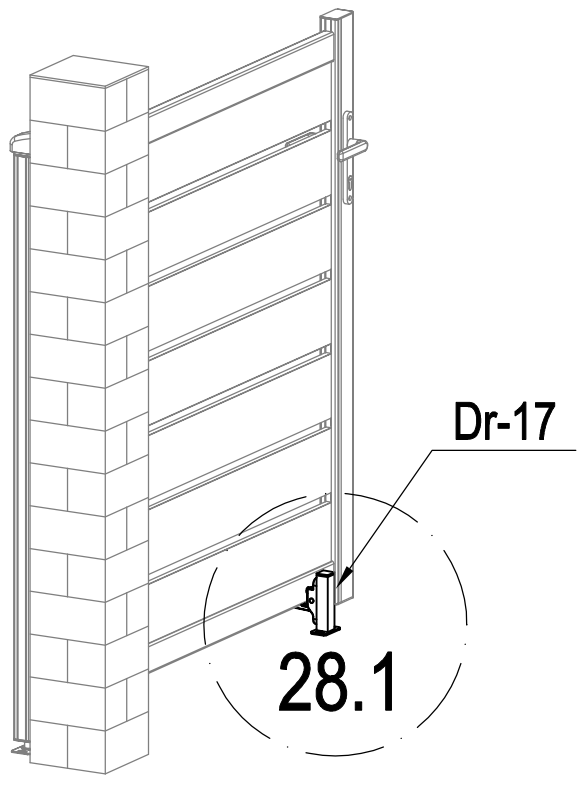

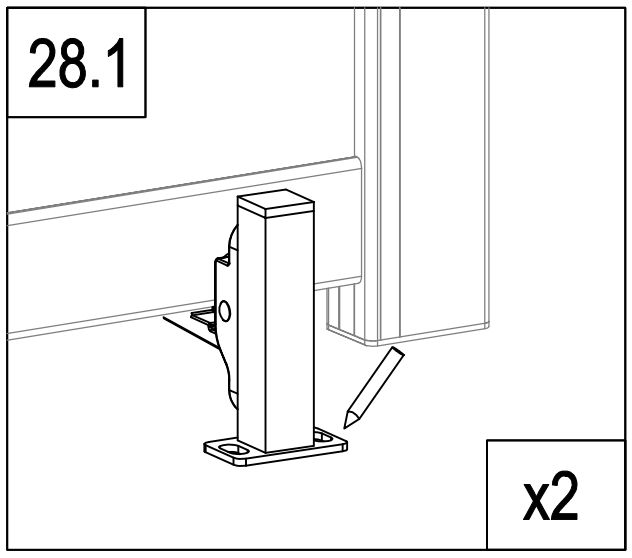

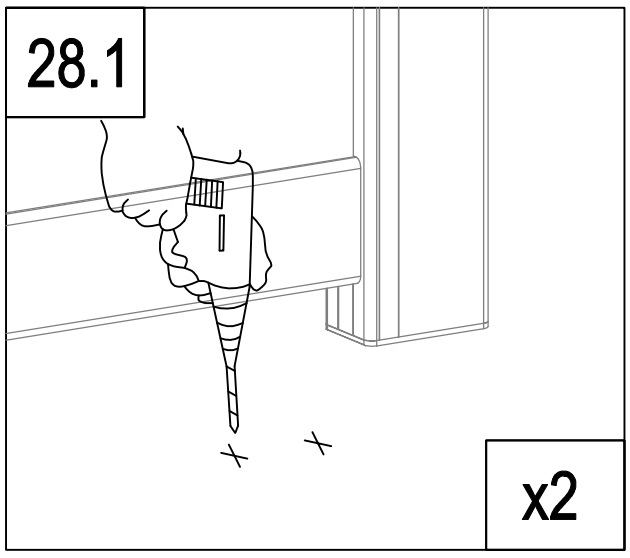

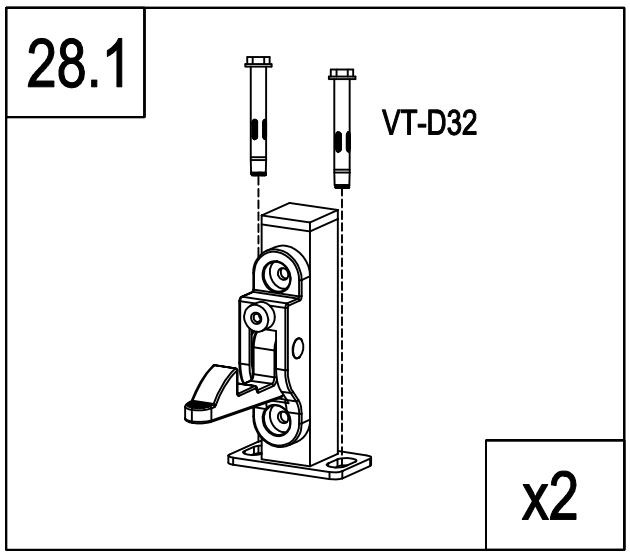

	VT-D32	4
	Dr-17	2