CASANOOV

VOGEL 400B120

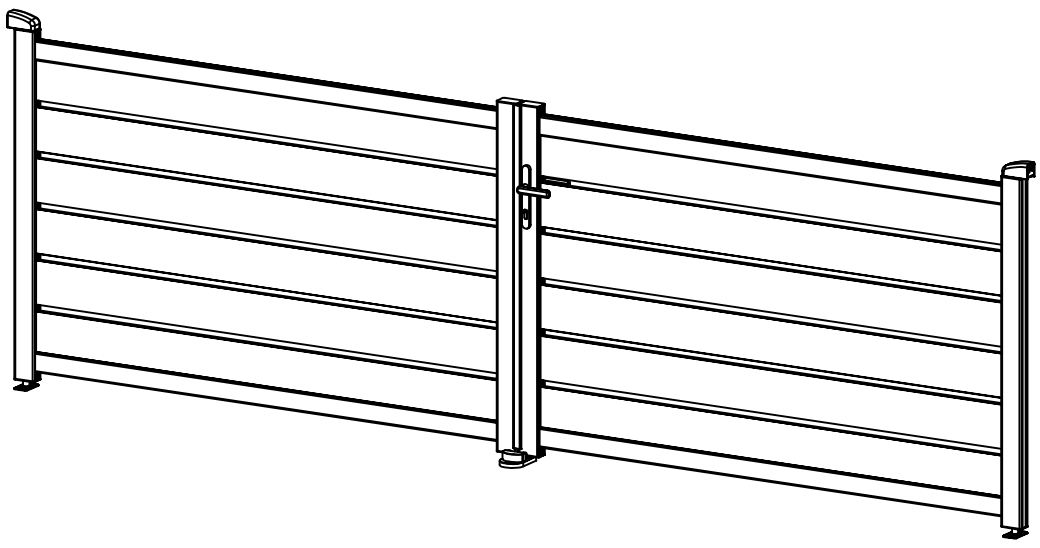

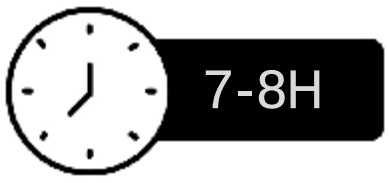

COM-000212	[x1]
COM-000213	[x1]

FR EN ES DE IT NL PL CE

NOTICE DE MONTAGE / INSTRUCTION MANUAL / MANUAL DE MONTAJE / MONTAGEANLEITUNG / MANUALE DI MONTAGGIO / MONTAGEHANDLEIDING / INSTRUKCJA MONTAŻU

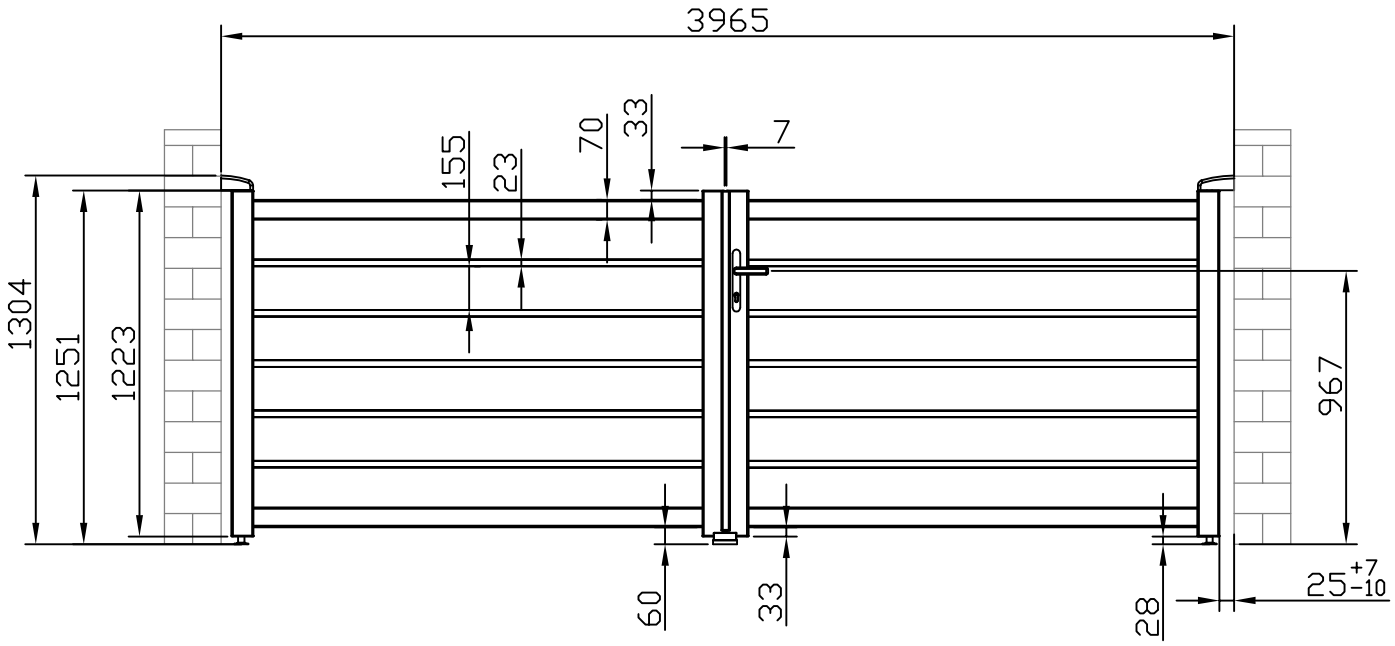
3965
155
23
70
33
7
1304
1251
1223
967
60
33
28
25 +7 -10

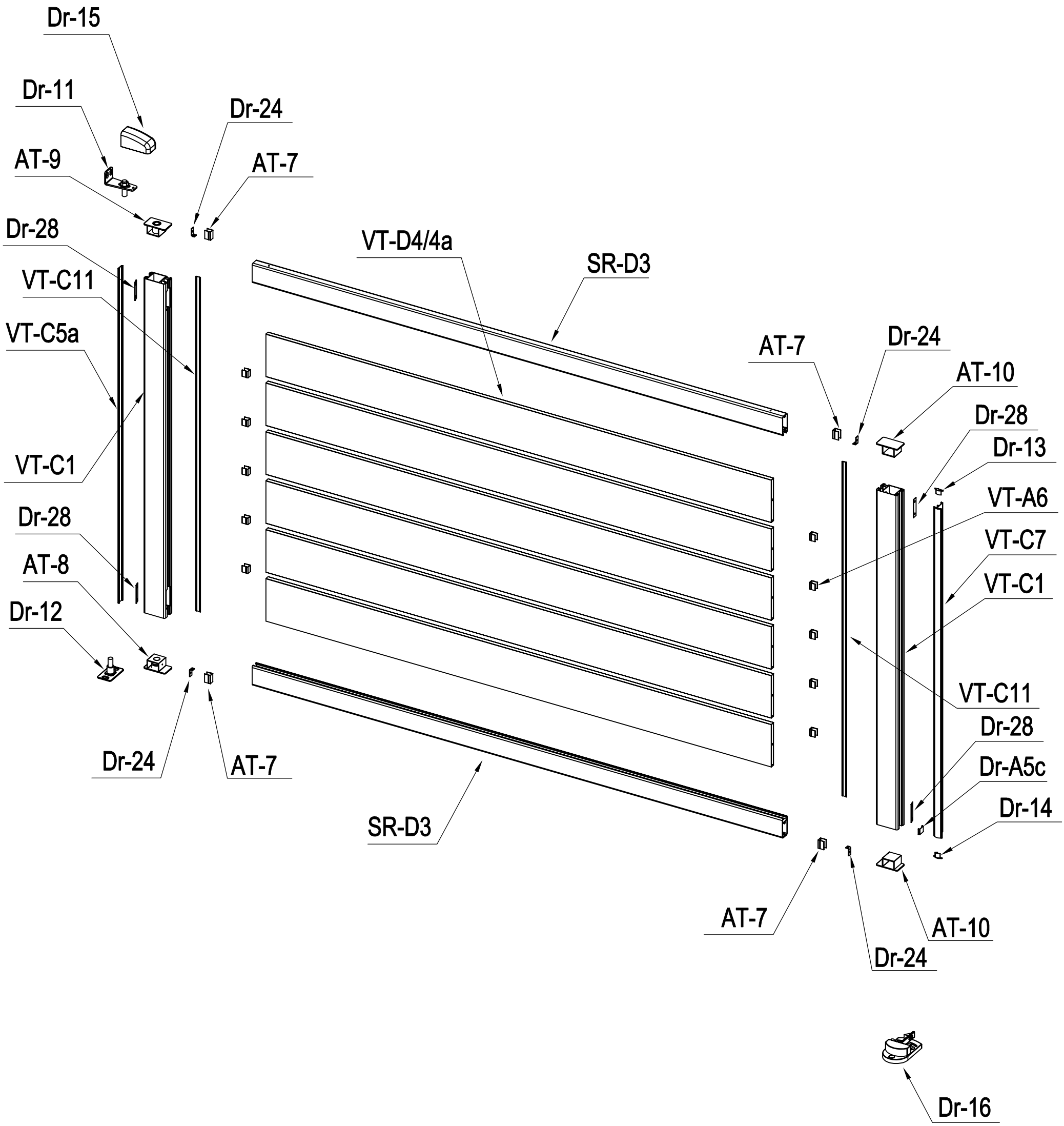
Dr-15
Dr-11
Dr-24
AT-9
AT-7
Dr-28
VT-D4/4a
SR-D3
VT-C11
VT-C5a
AT-7
Dr-24
AT-10
Dr-28
Dr-13
VT-C1
VT-A6
Dr-28
VT-C7
AT-8
VT-C1
Dr-12
VT-C11
Dr-28
Dr-24
AT-7
Dr-A5c
Dr-14
SR-D3
AT-7
AT-10
Dr-24
Dr-16

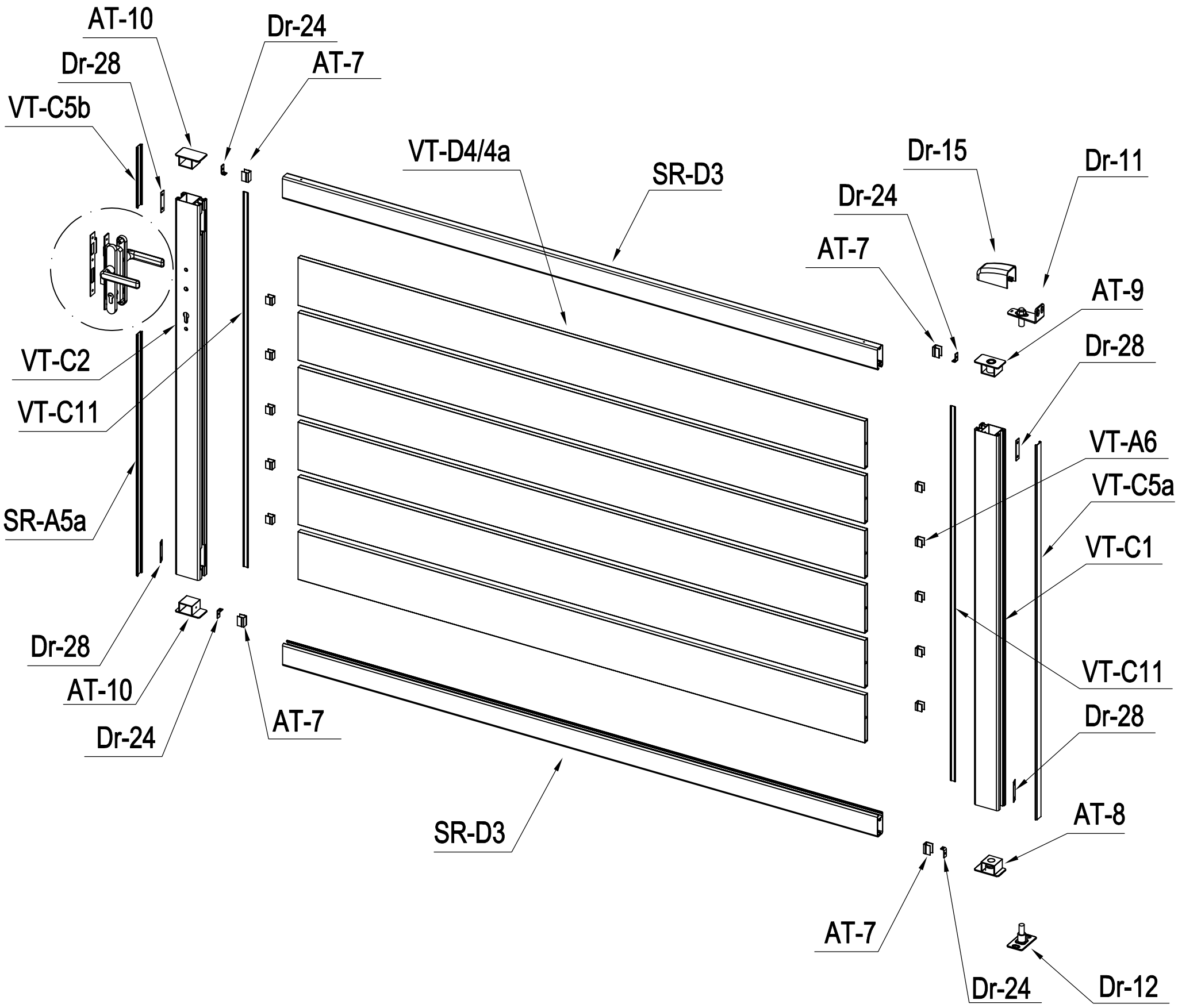
AT-10
Dr-24
Dr-28
AT-7
VT-C5b
VT-D4/4a
SR-D3
Dr-15
Dr-11
Dr-24
AT-7
AT-9
Dr-28
VT-C2
VT-C11
VT-A6
VT-C5a
SR-A5a
VT-C1
Dr-28
AT-10
Dr-24
AT-7
VT-C11
Dr-28
SR-D3
AT-8
AT-7
Dr-24
Dr-12

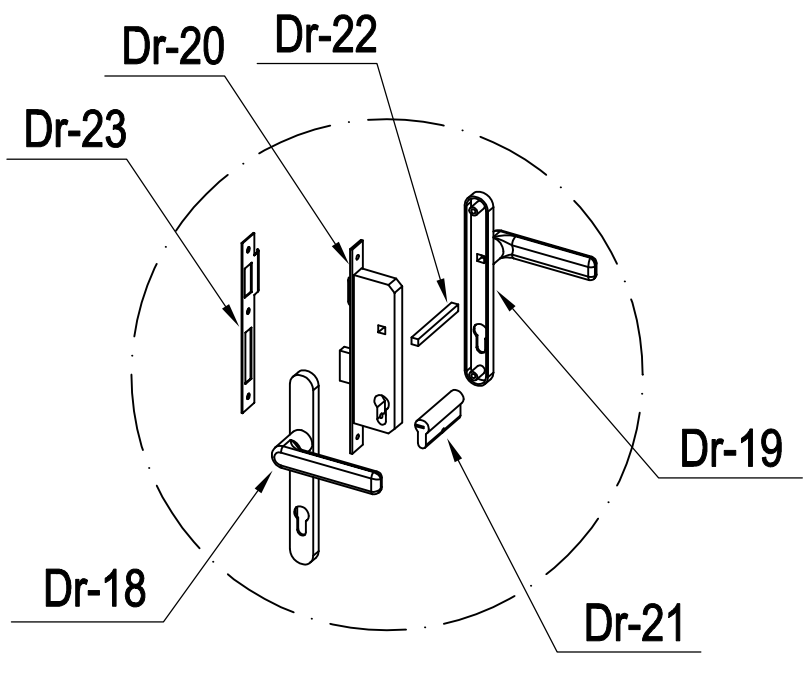
Dr-20
Dr-22
Dr-23
Dr-19
Dr-18
Dr-21

PART LIST

IMAGE	NO.	L.(mm)	QTY
	VT-C1	1217	3
	VT-C2	1217	1
	SR-D3	1931	4
	VT-D4	1840	10
	VT-D4a (+SR-D15)	1840	2
	VT-C5a	1217	2
	VT-C5b	194.5	1
	SR-A5a	782	1
	Dr-A5c	19.5	1
	VT-C11	1217	4
	VT-A6	23	20
	AT-7	29.5	8
	VT-C7	1197	1
	AT-8		2
	AT-9		2
	AT-10		4
	Dr-11		2
	Dr-12		2
	Dr-13		1
	Dr-14		1
	Dr-15		2

IMAGE	NO.	L.(mm)	QTY
	Dr-16		1
	Dr-17		2
	Dr-31		4
	Dr-18		1
	Dr-19		1
	Dr-20		1
	Dr-21		1
	Dr-22		1
	Dr-23		1
	Dr-24		8
	Dr-25		1
	Dr-25a		2
	Dr-26		3
	Dr-27		2
	VT-Z30		8
	VT-Z31		8
	VT-Z32		12
	VT-Z33		16
	VT-Z34		3
	VT-Z35		3
	VT-Z36		48
	Dr-28		8

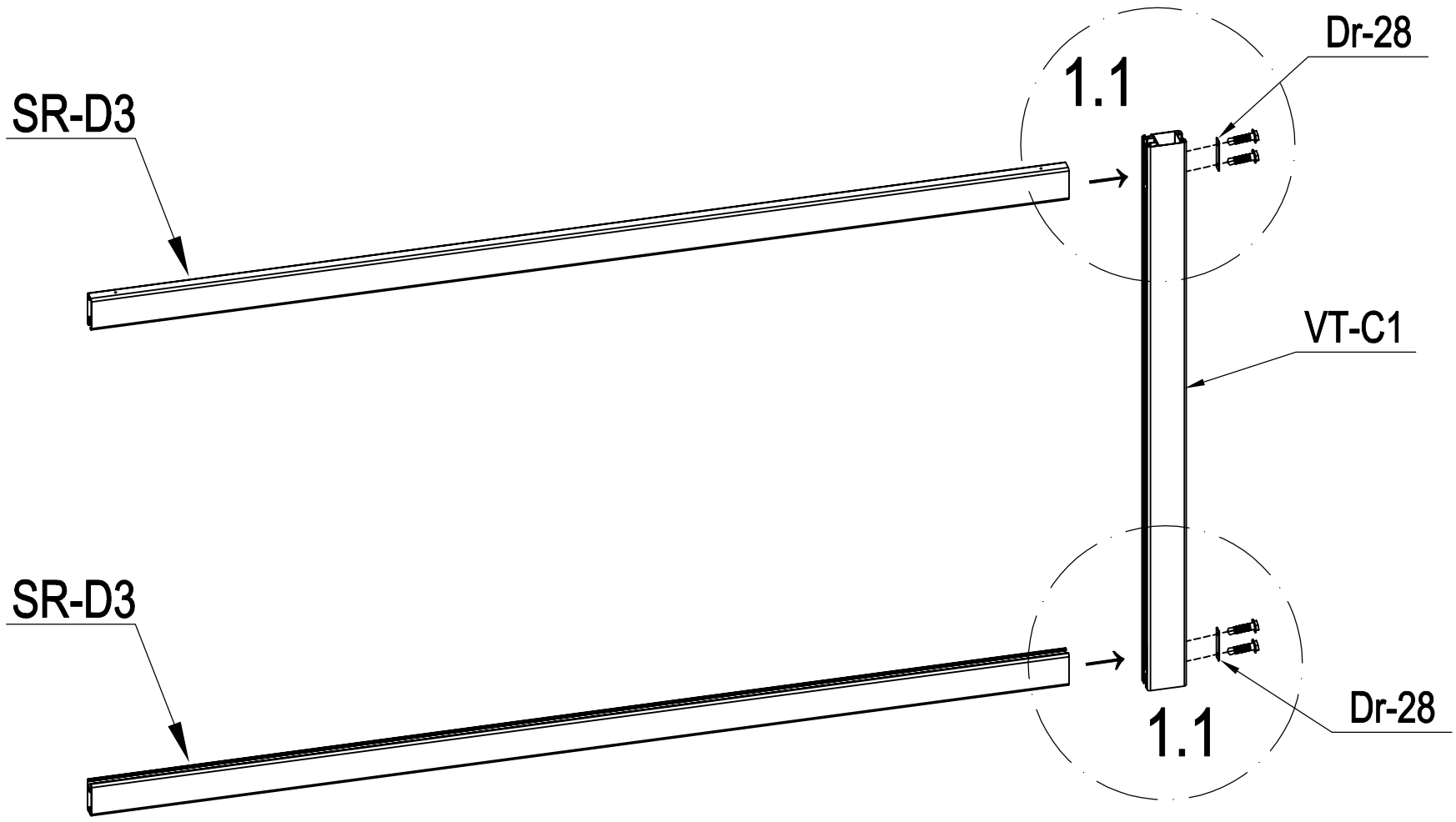

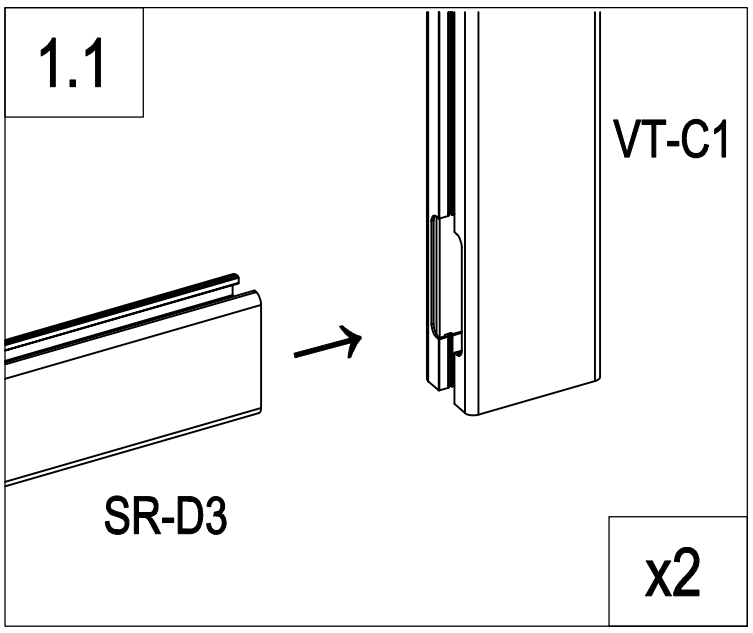

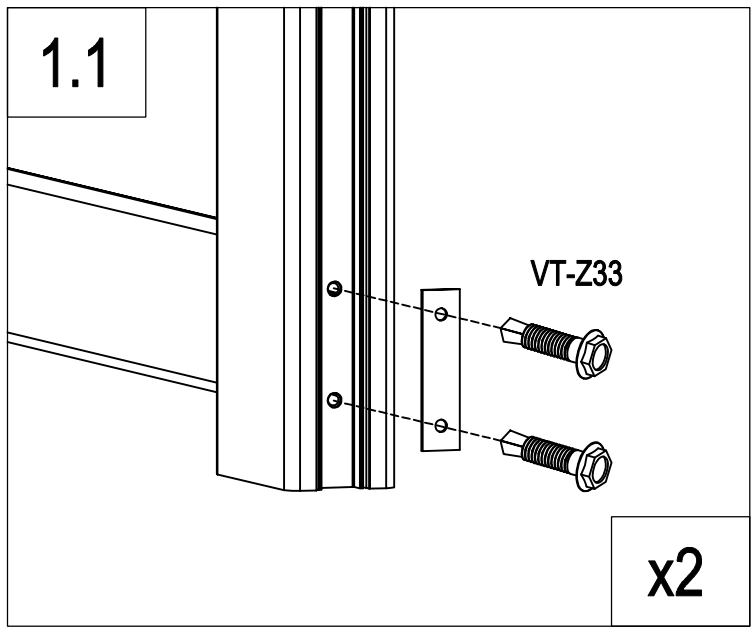

	VT-C1	1
	SR-D3	2
	Dr-28	2
	VT-Z33	4

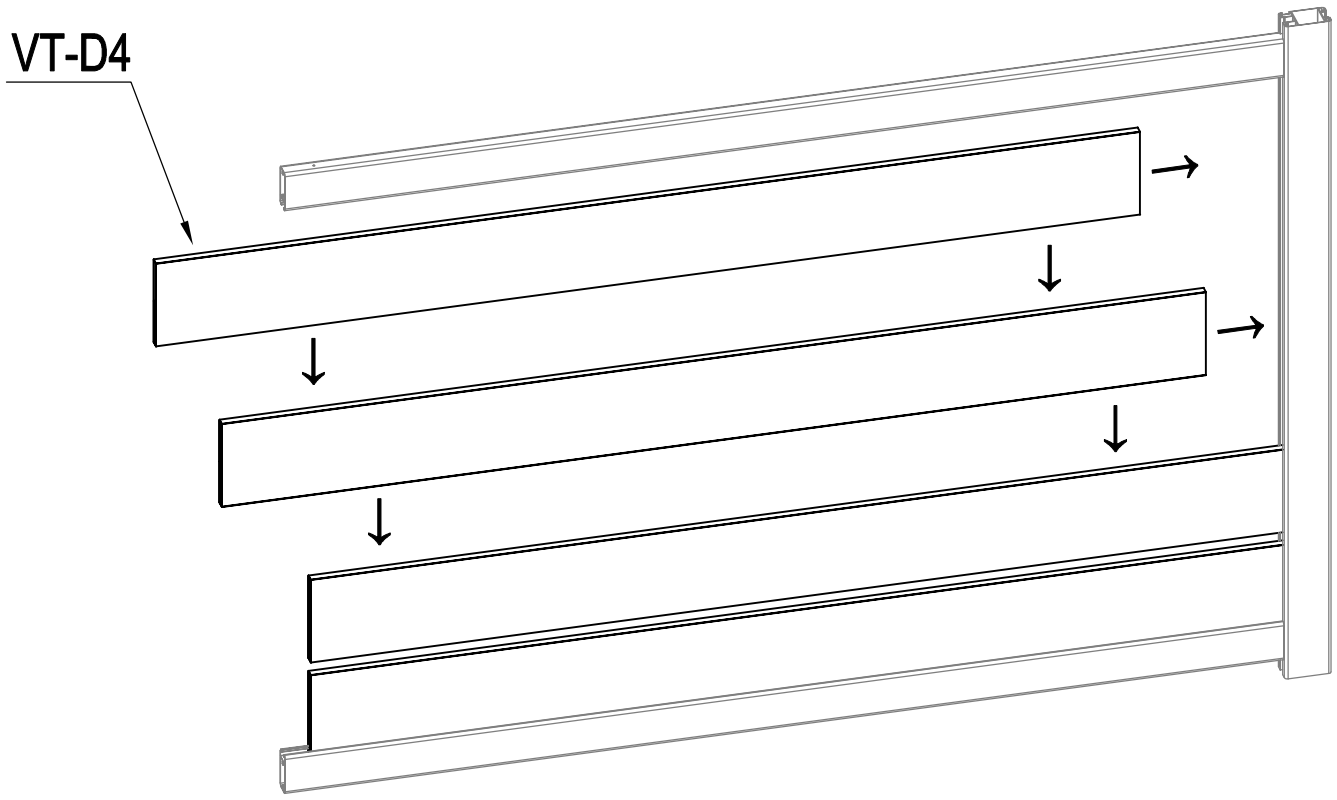

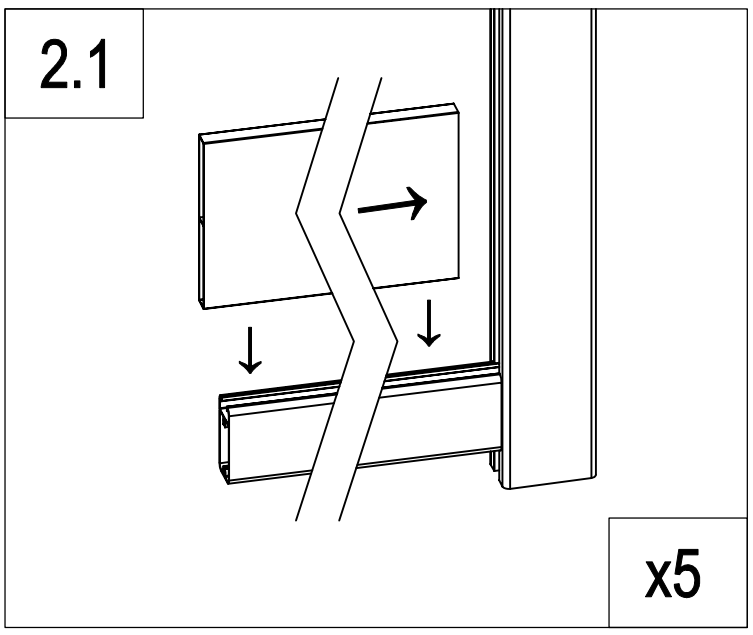

	VT-D4	5

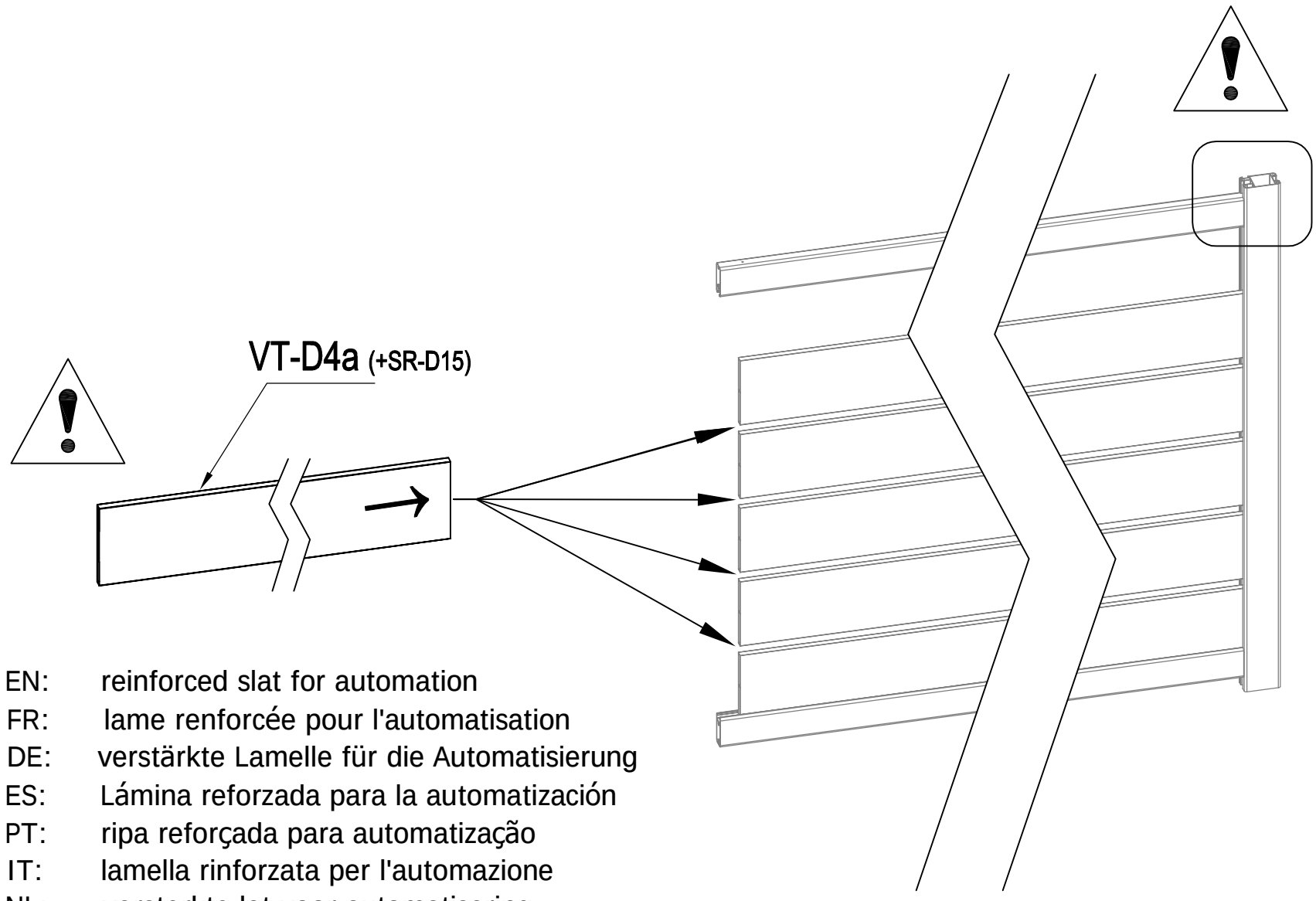

EN: reinforced slat for automation
FR: lame renforcée pour l'automatisation
DE: verstärkte Lamelle für die Automatisierung
ES: Lámina reforzada para la automatización
PT: ripa reforçada para automatização
IT: lamella rinforzata per l'automazione
NL: versterkte lat voor automatisering
PL: wzmocniona listwa do automatyzacji

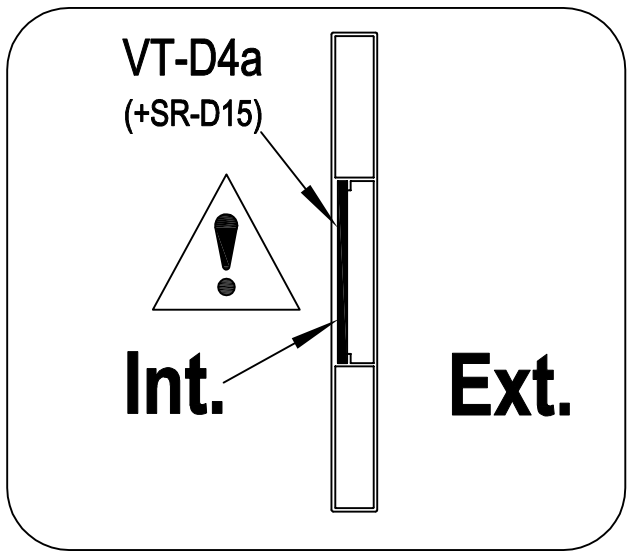

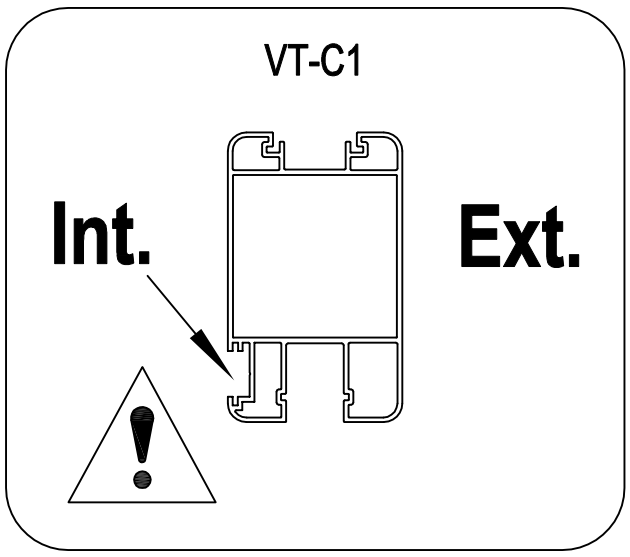

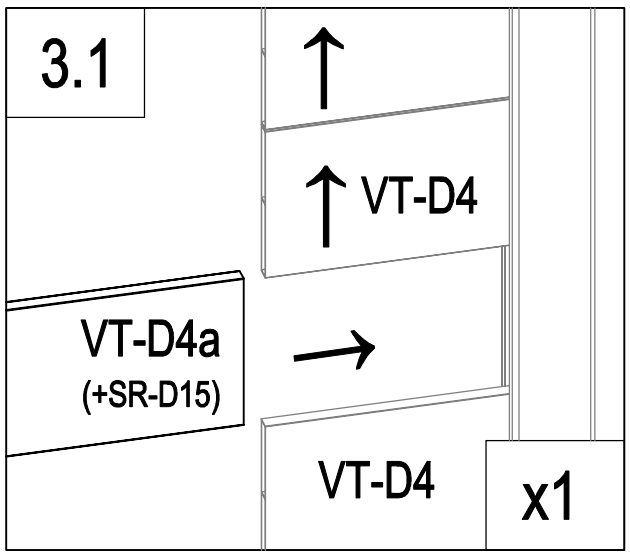

	VT-D4a (+SR-D15)	1

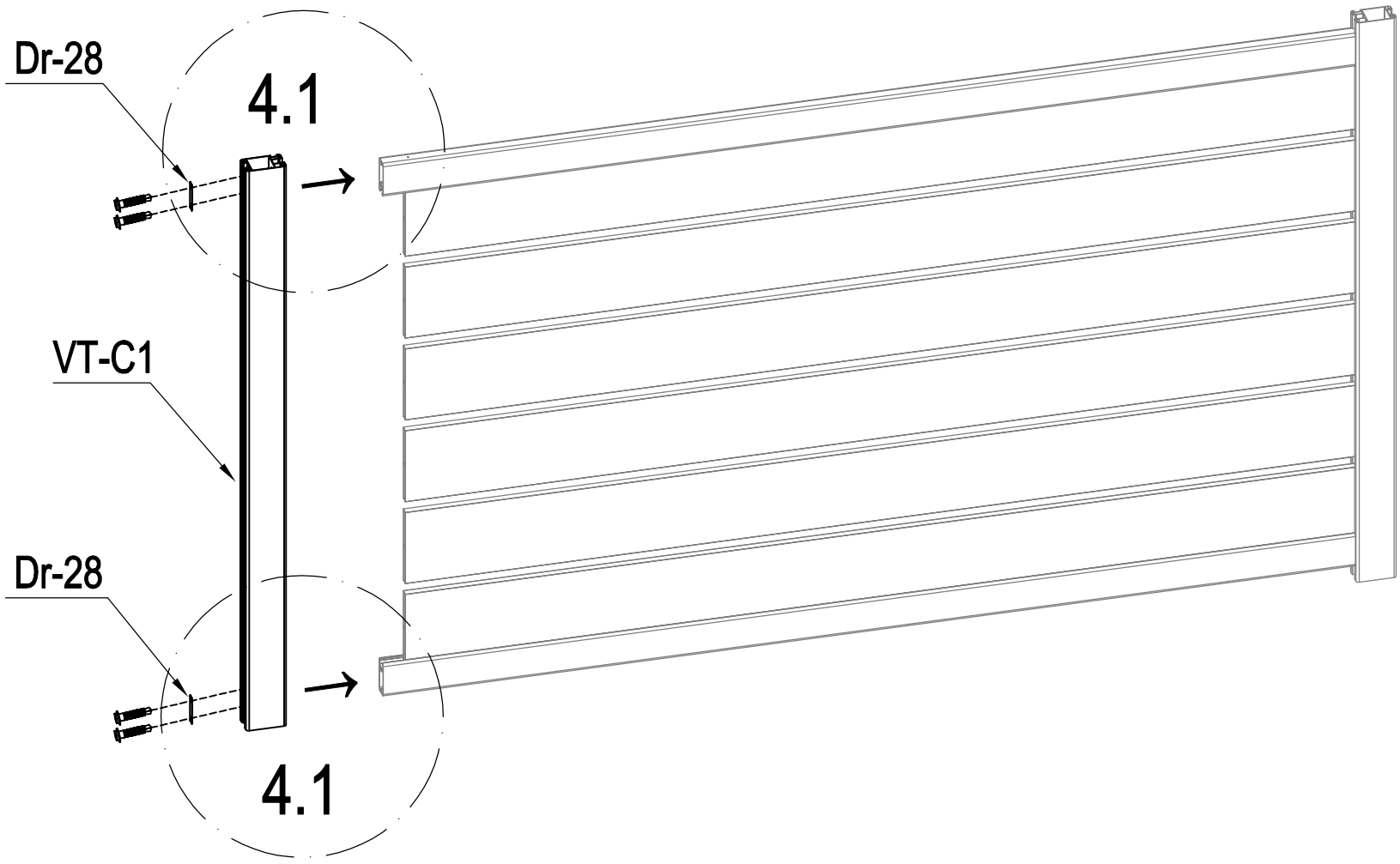

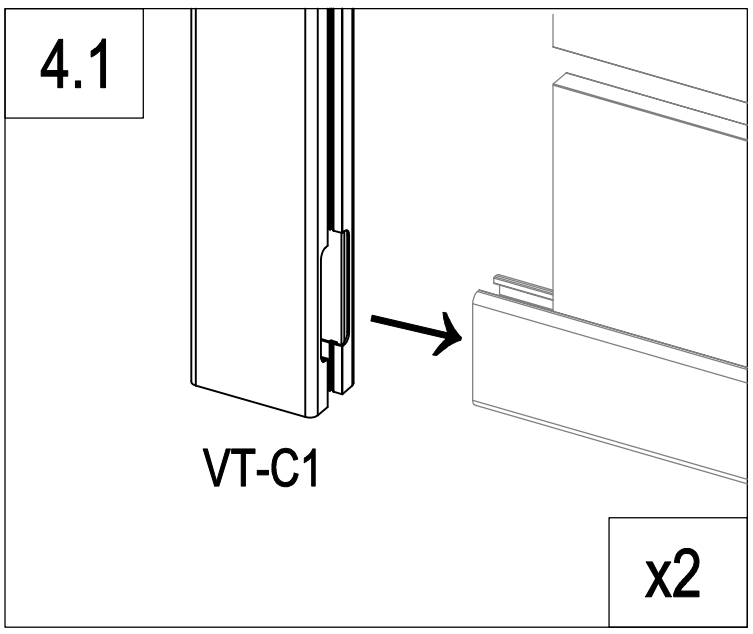

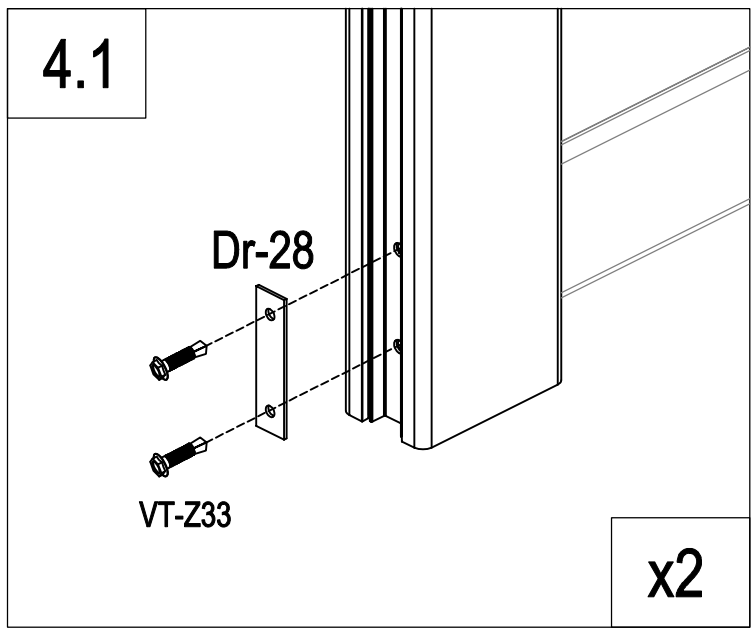

	VT-C1	1
	Dr-28	2
	VT-Z33	4

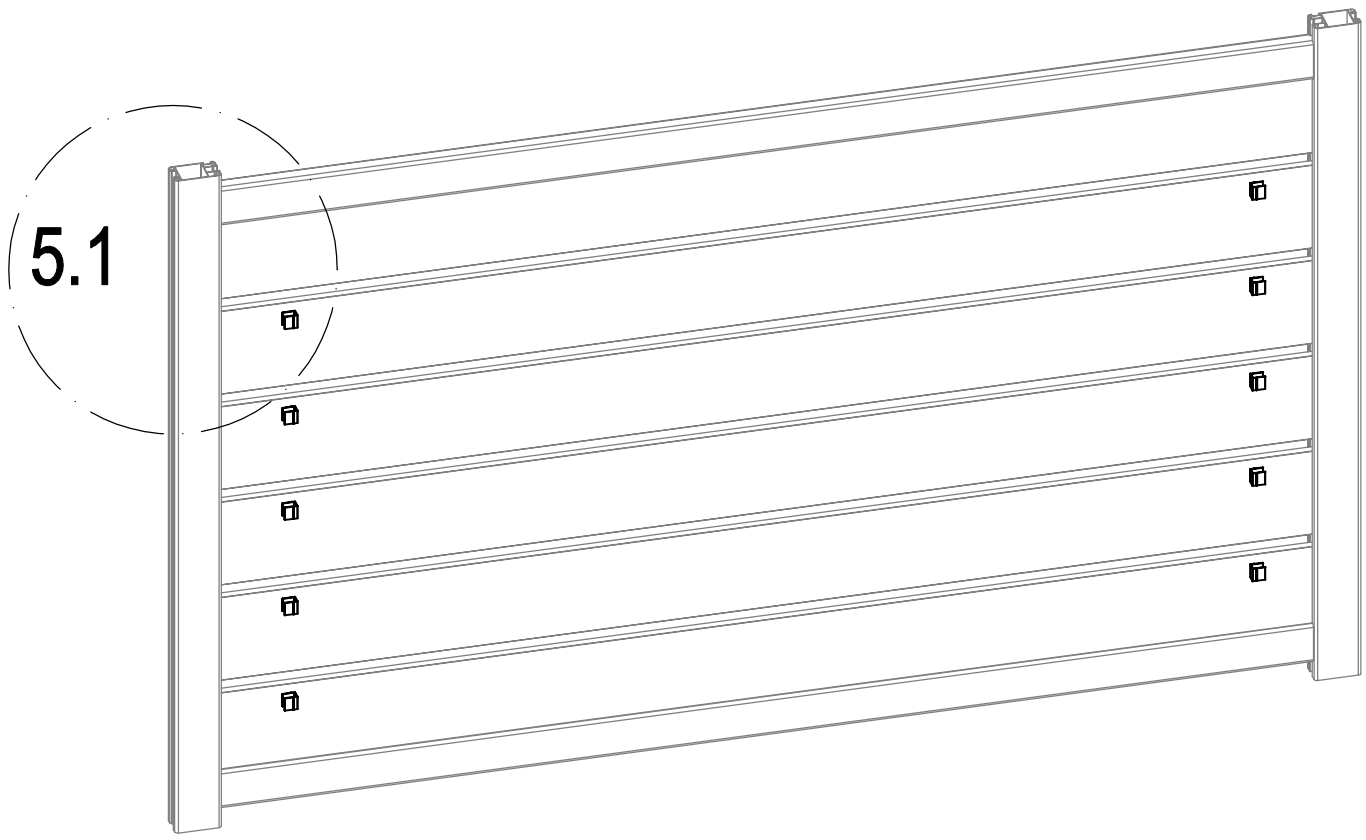

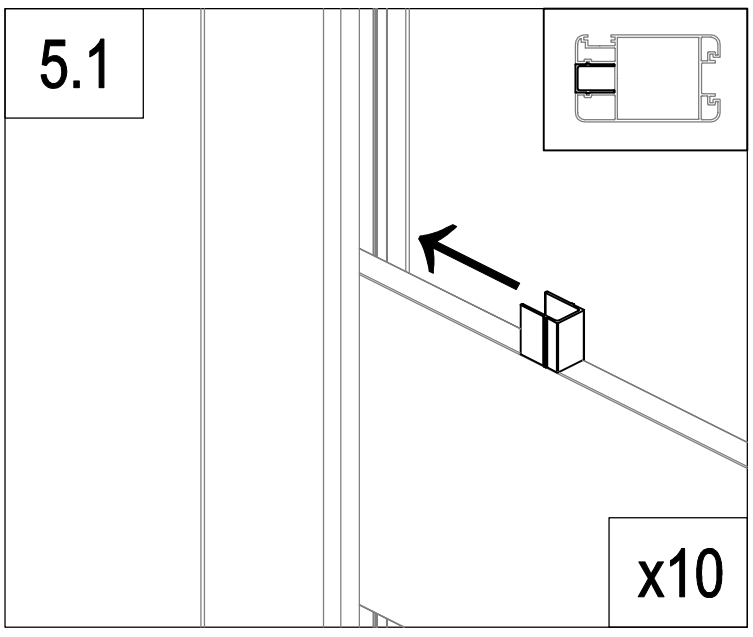

	VT-A6	10

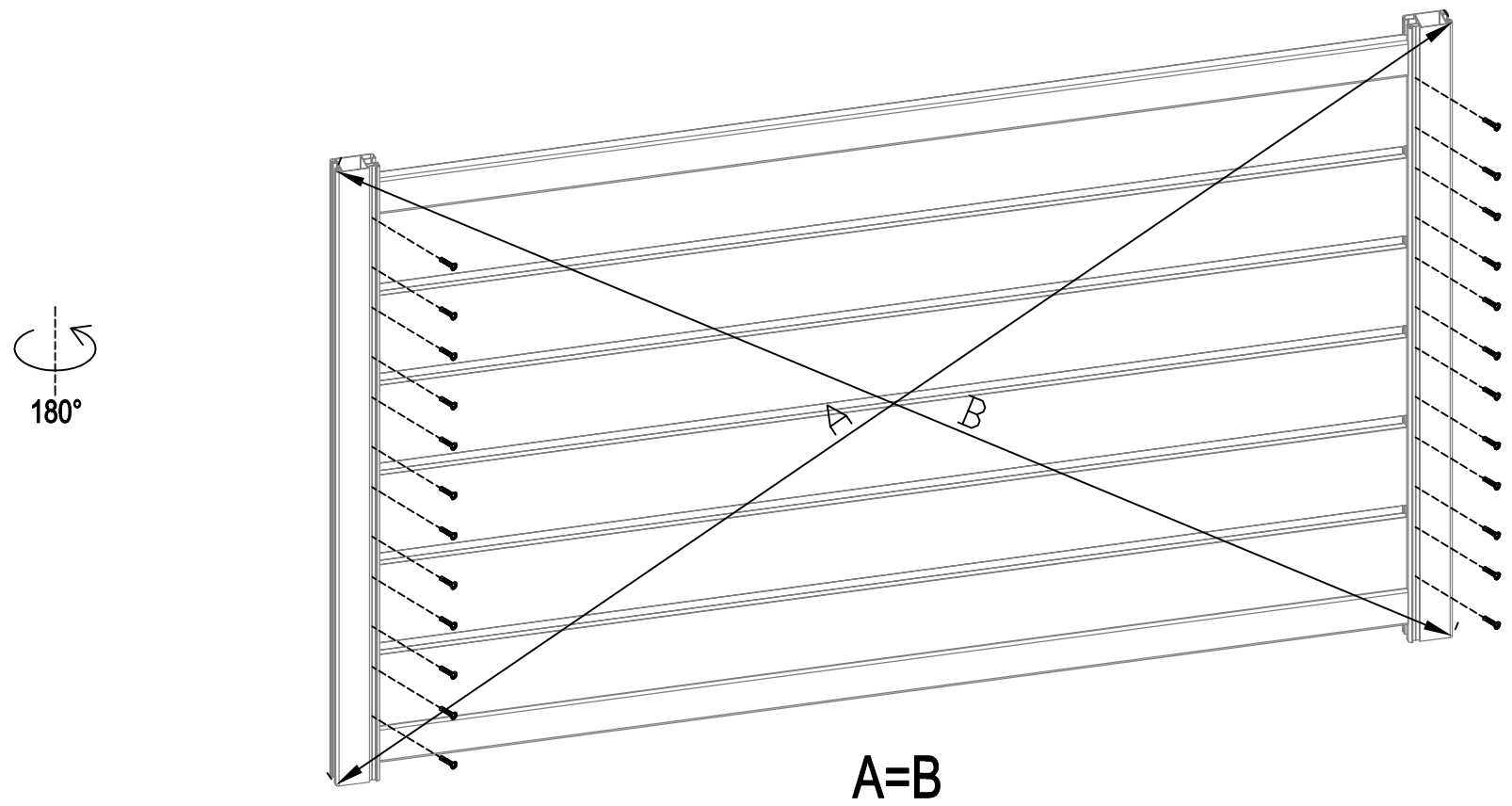

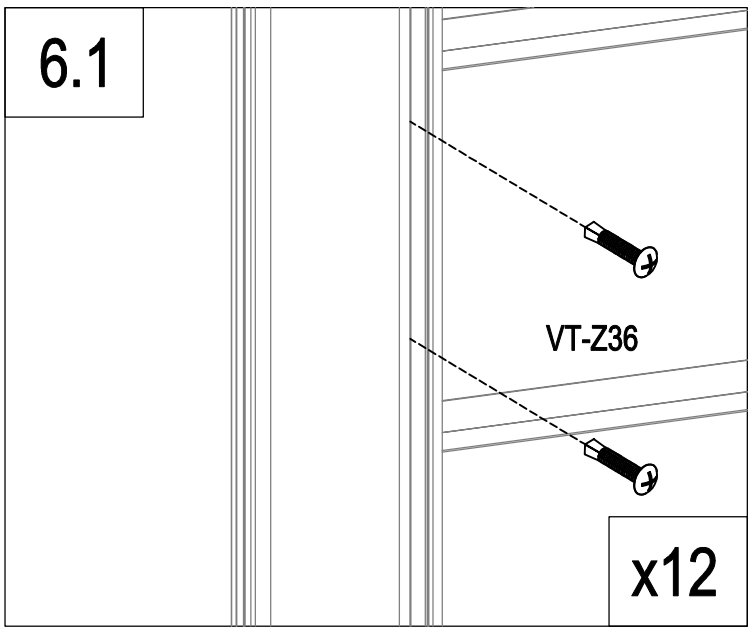

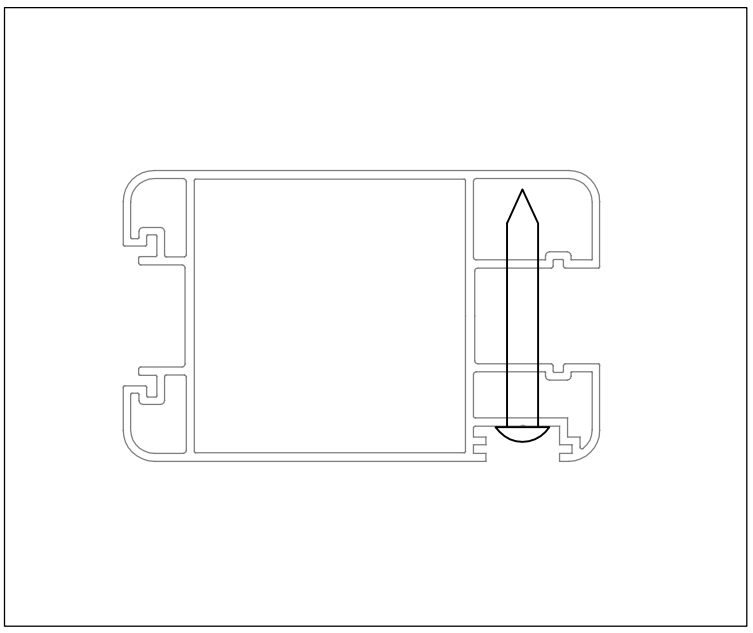

	VT-Z36	24

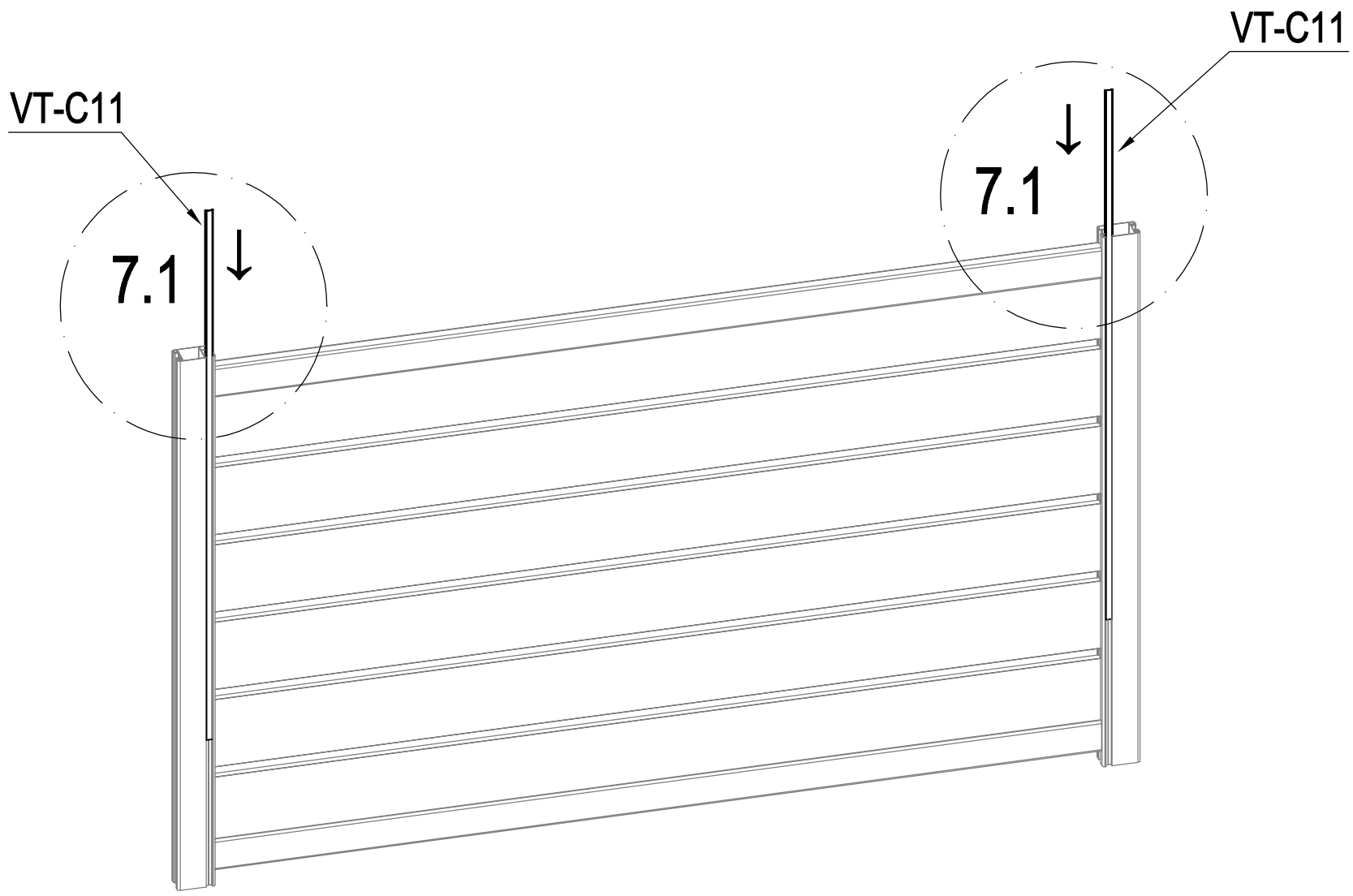

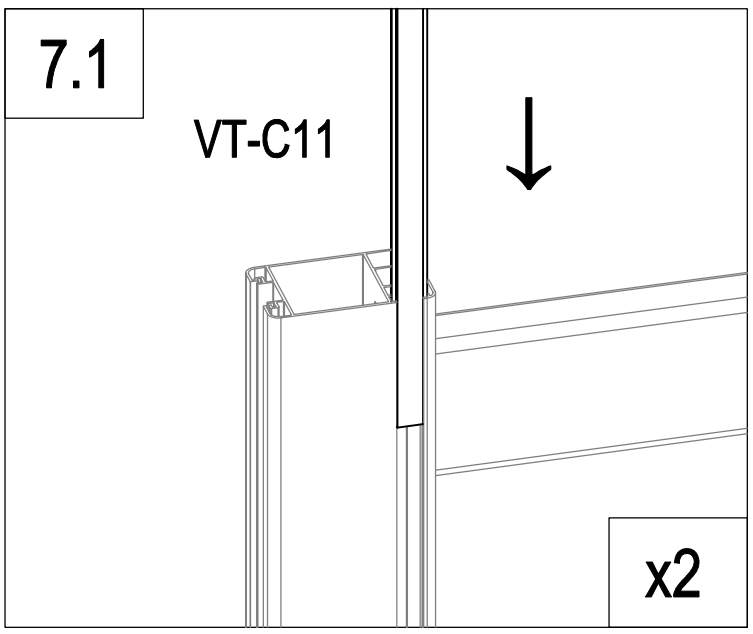

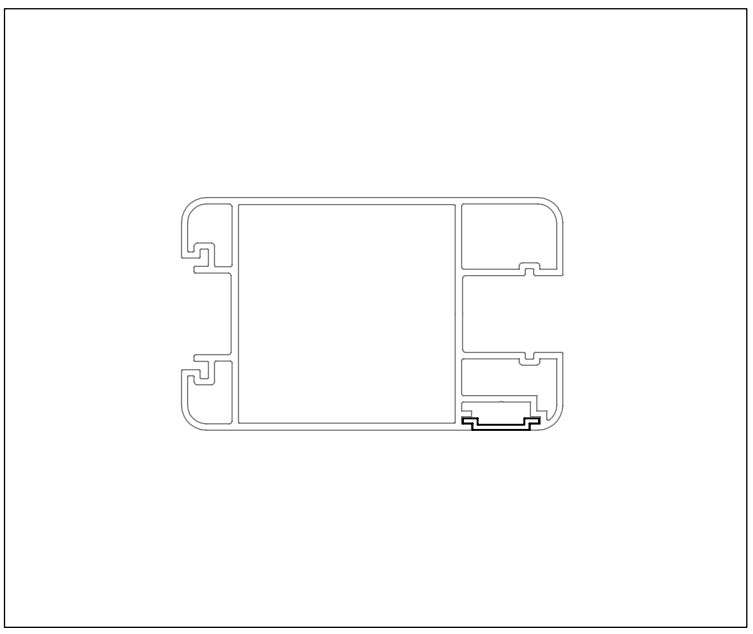

	VT-C11	2

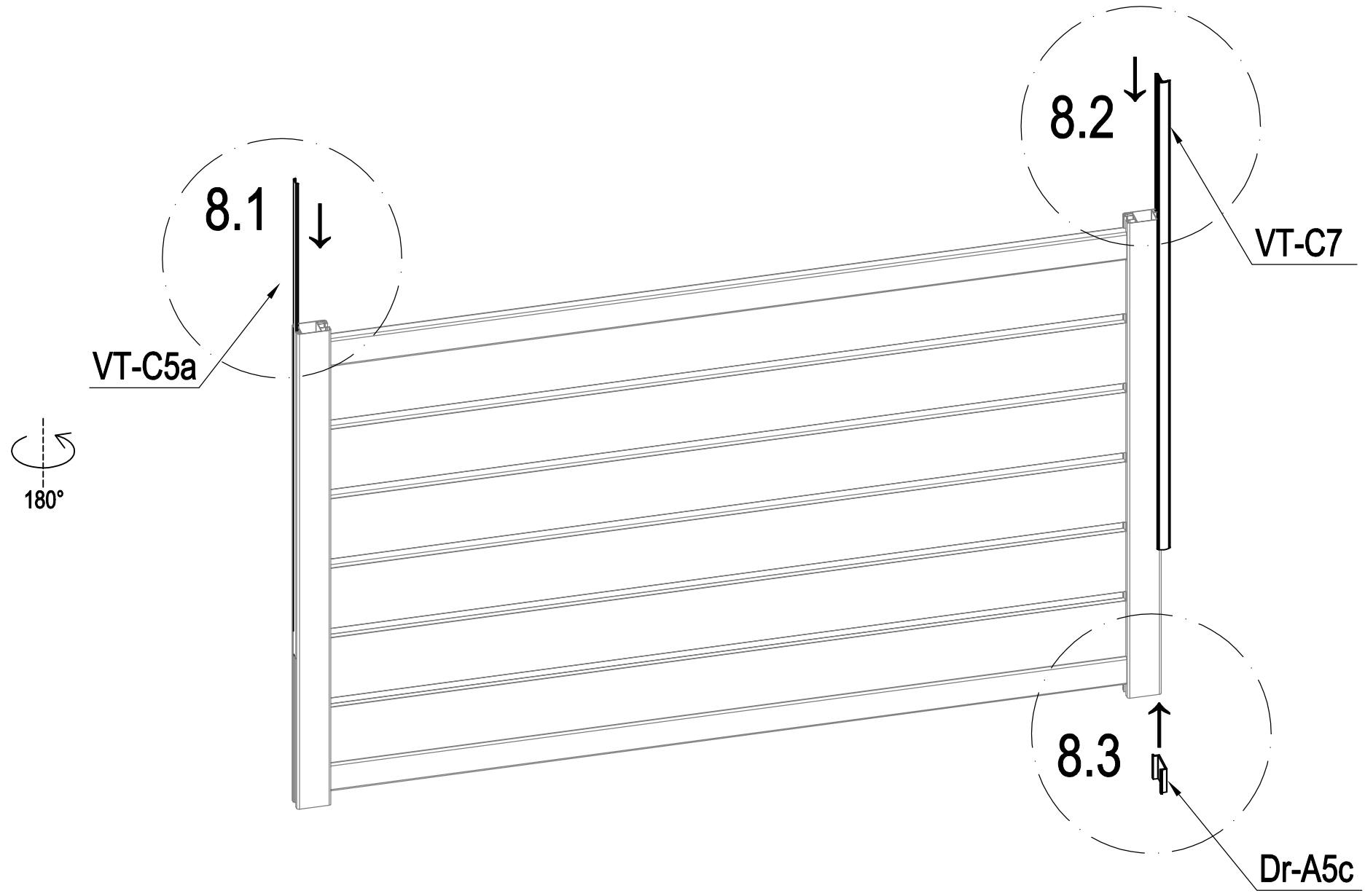

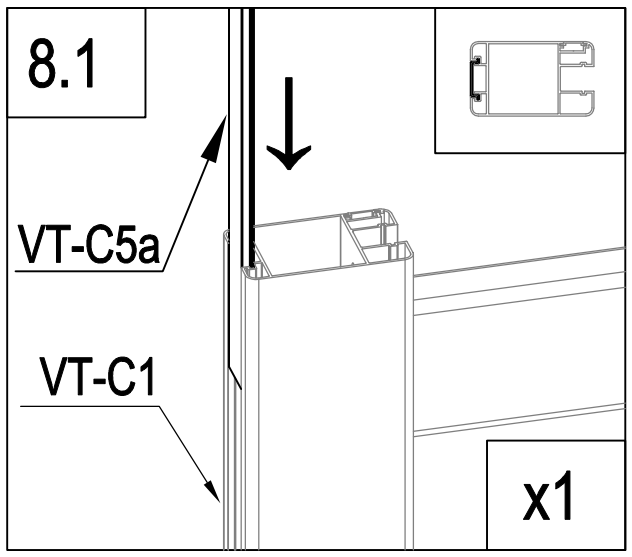

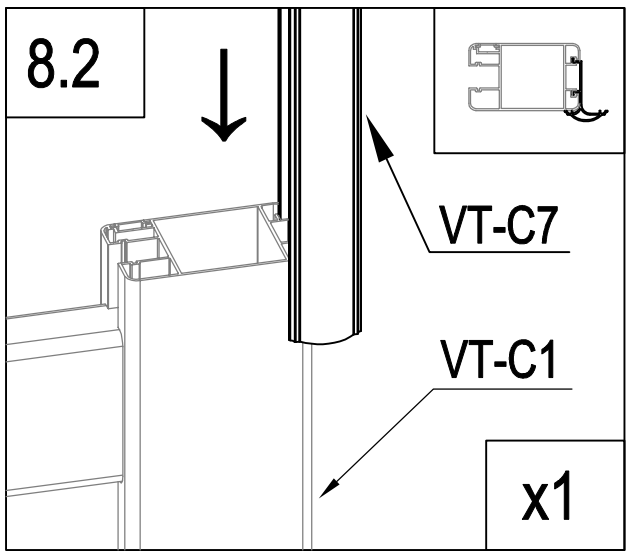

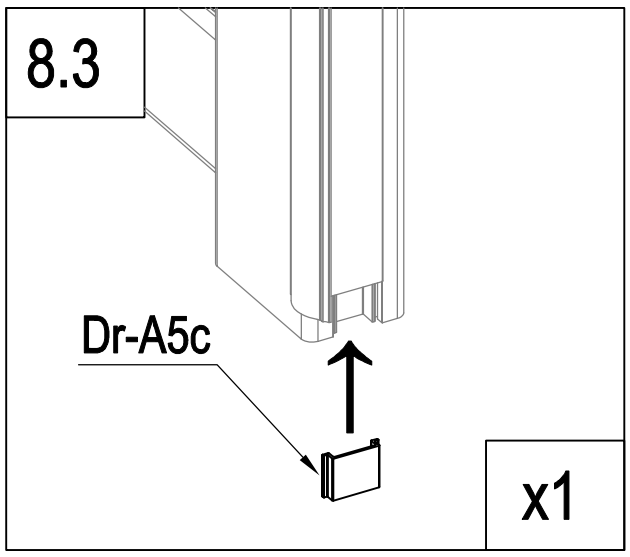

	VT-C5a	1
	Dr-A5c	1
	VT-C7	1

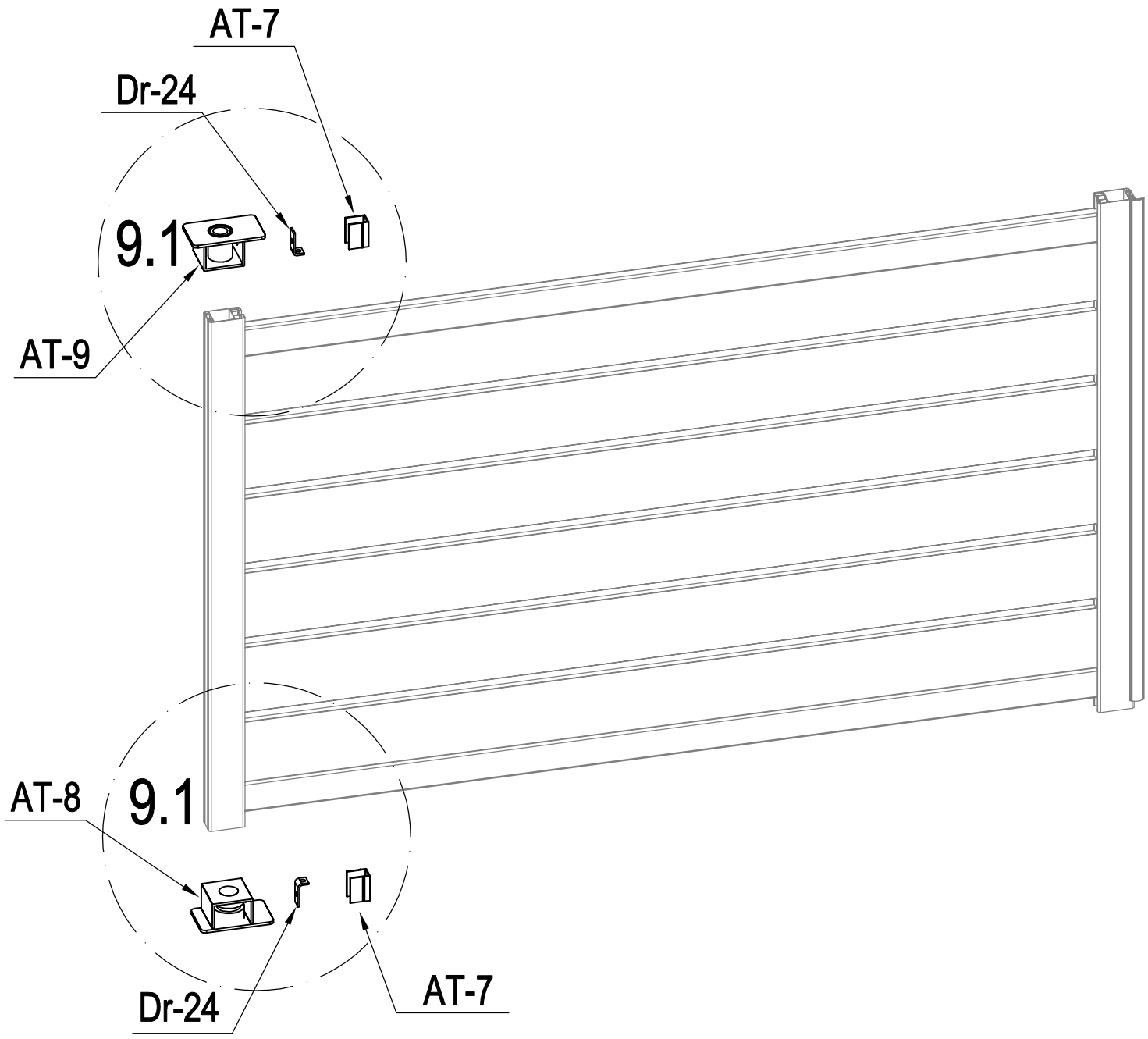

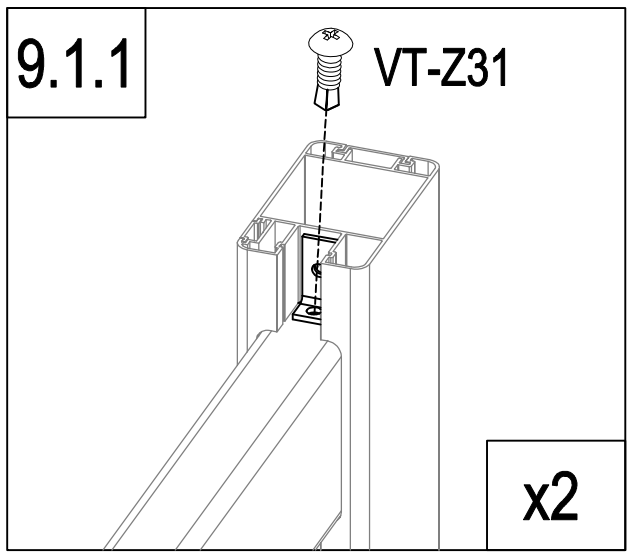

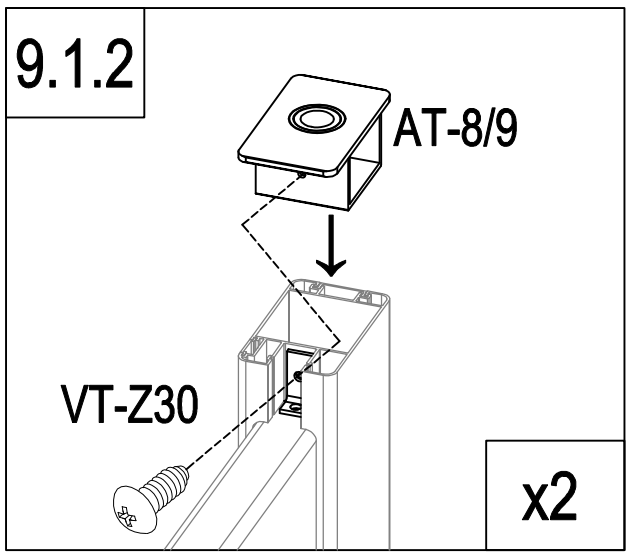

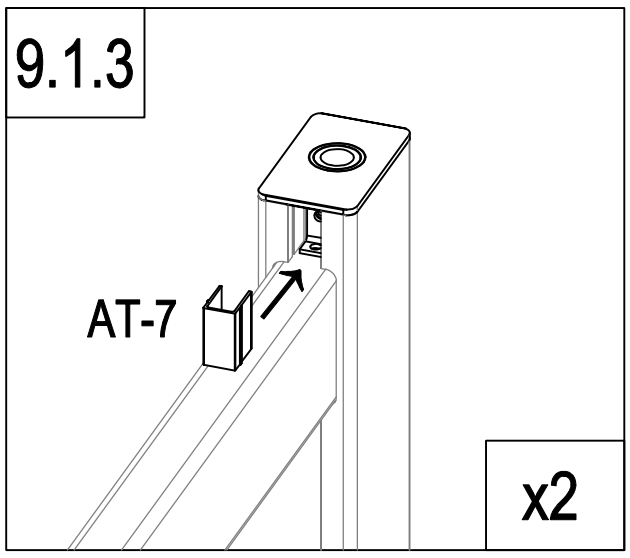

	AT-8	1
	AT-9	1
	Dr-24	2

	AT-7	2
	VT-Z30	2
	VT-Z31	2

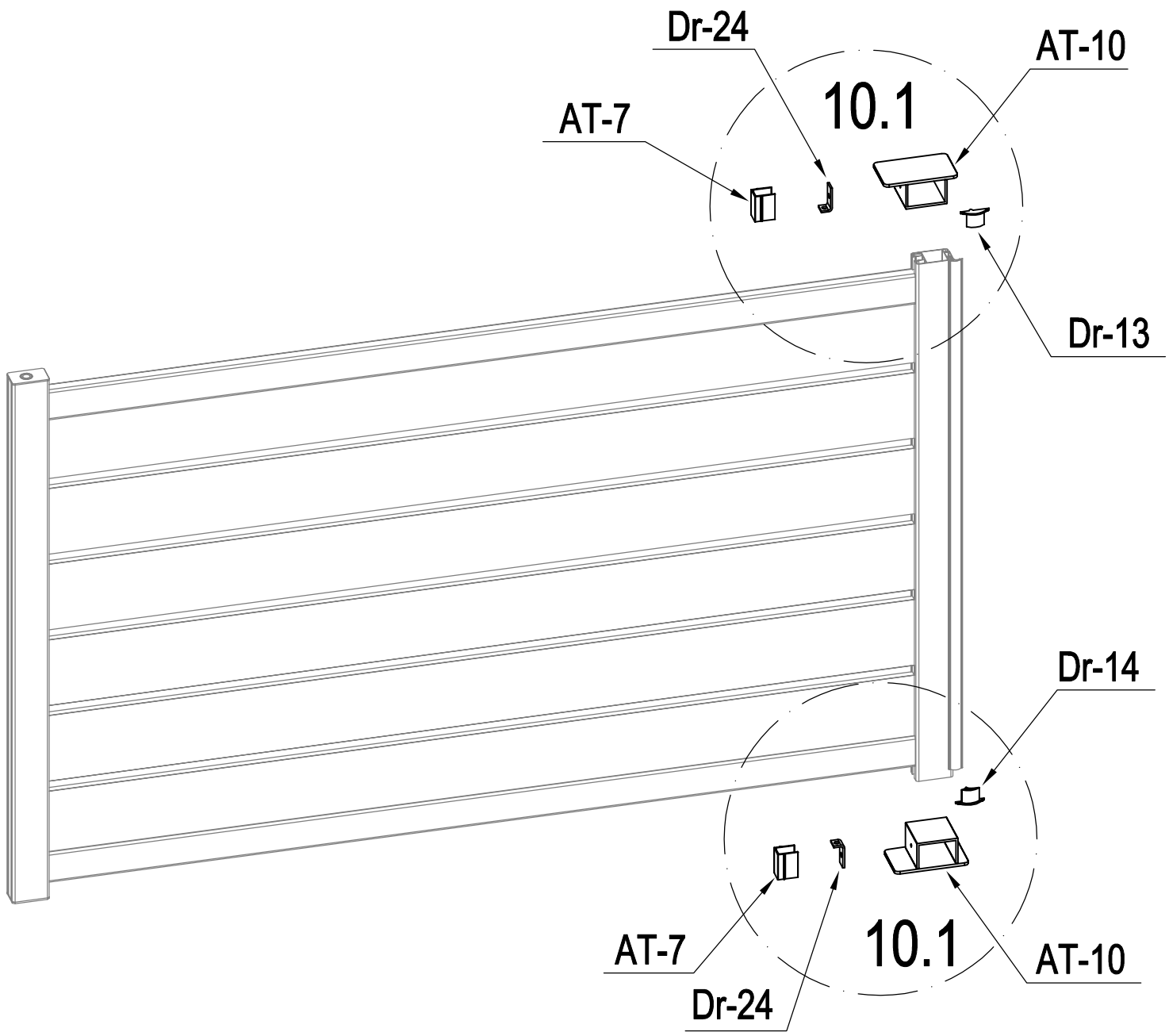

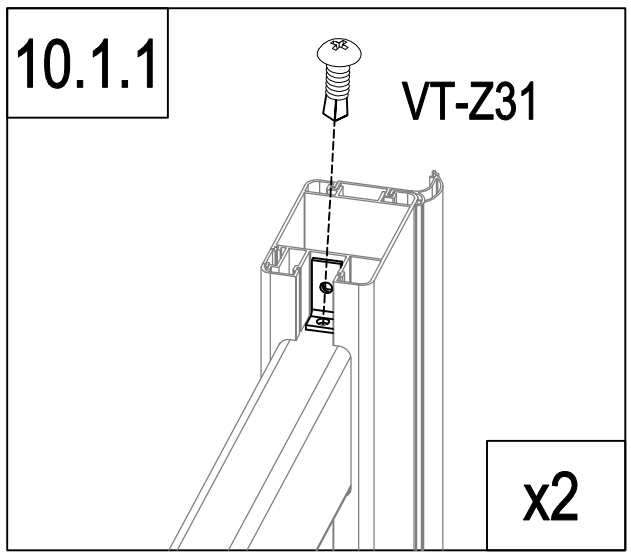

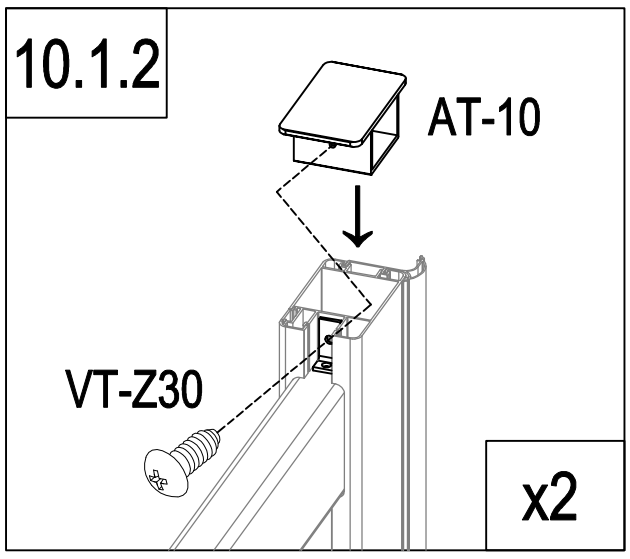

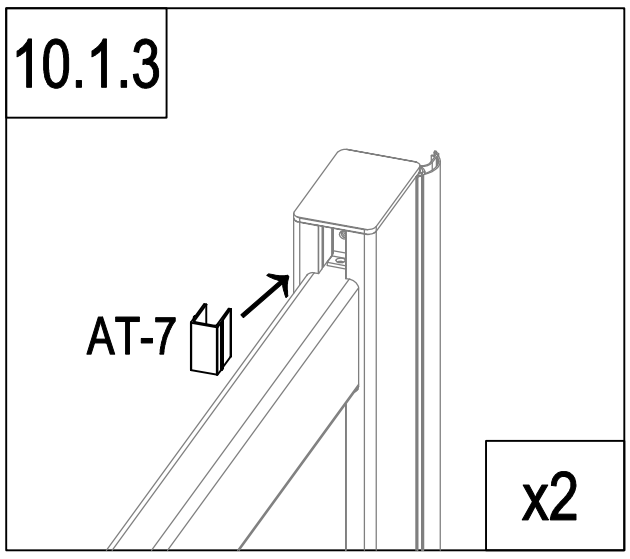

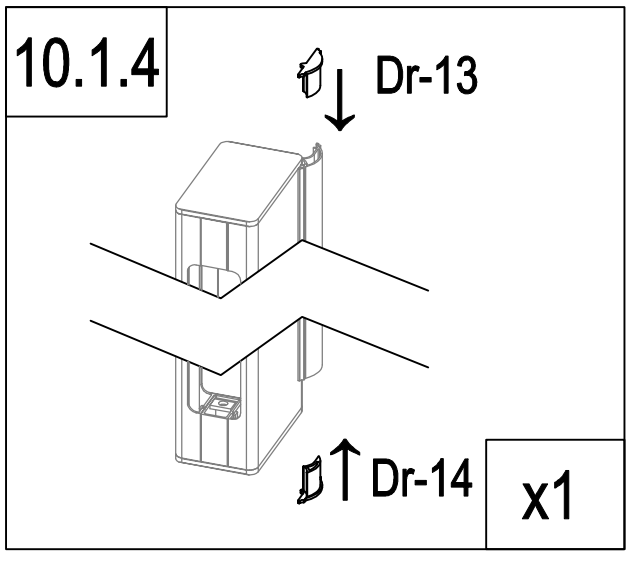

	AT-10	2
	Dr-24	2
	AT-7	2
	Dr-13	1

	Dr-14	1
	VT-Z30	2
	VT-Z31	2

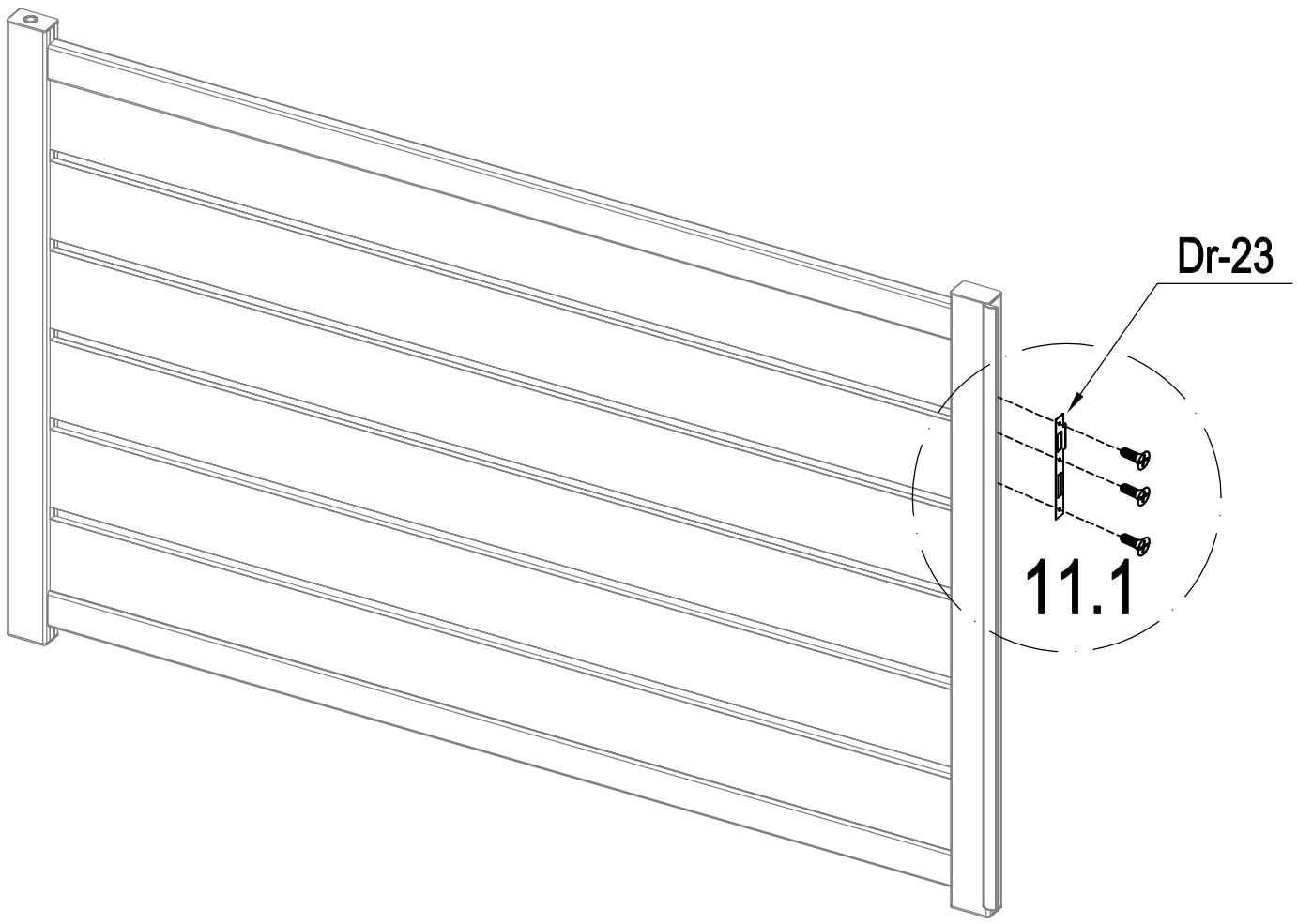

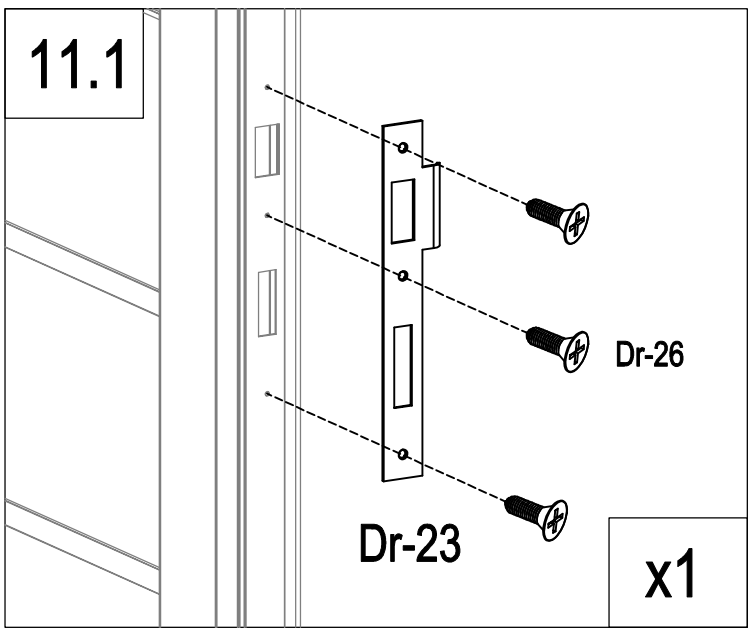

	Dr-23	1
	Dr-26	3

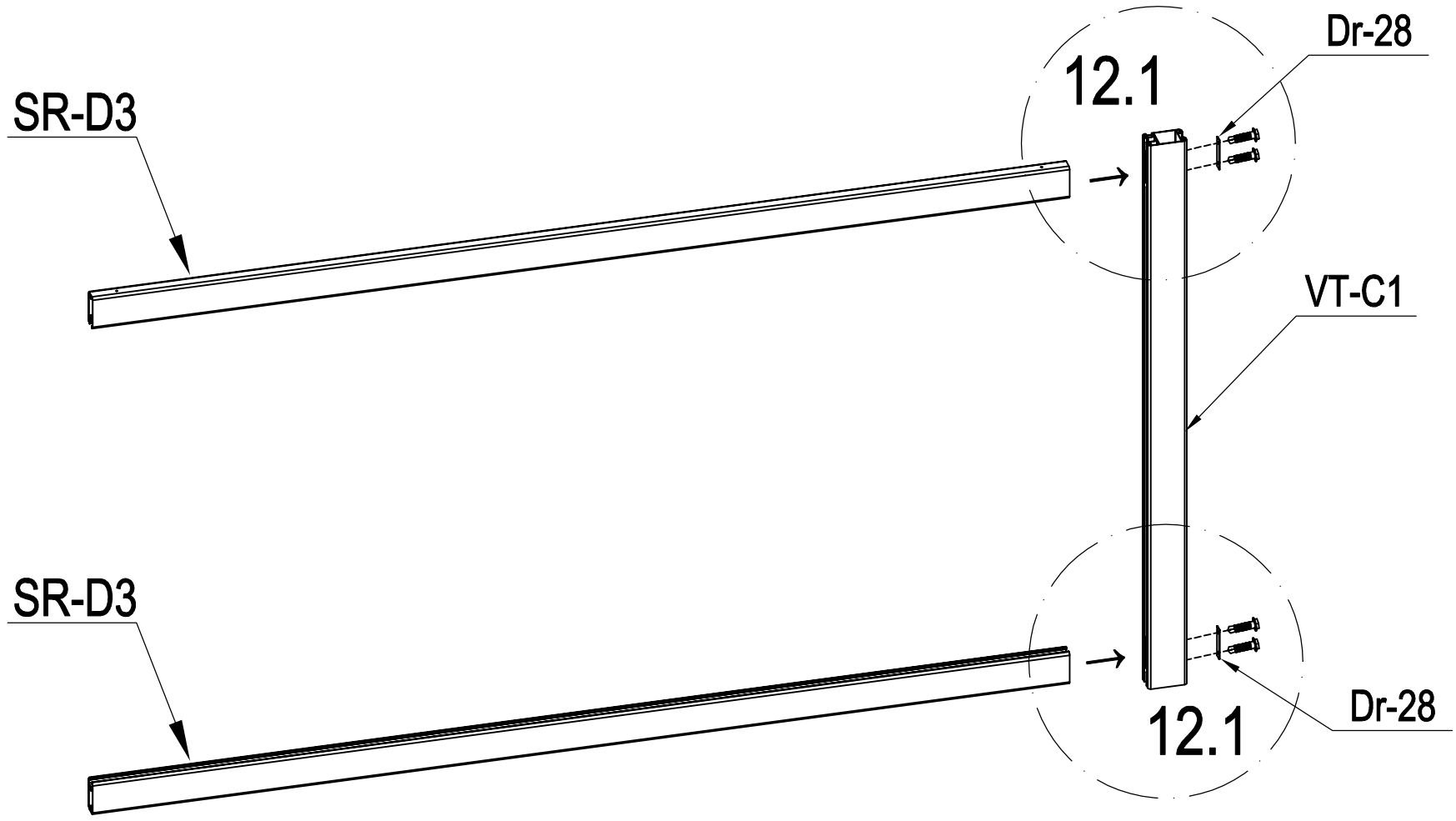

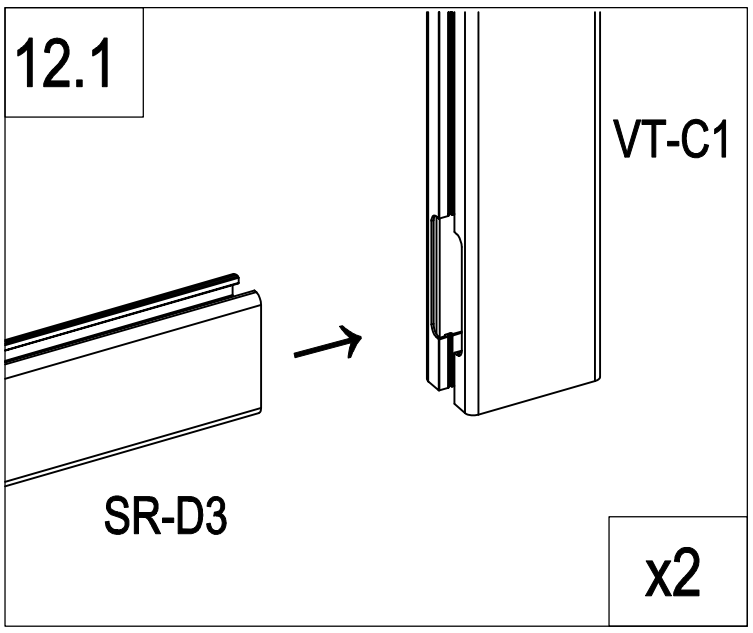

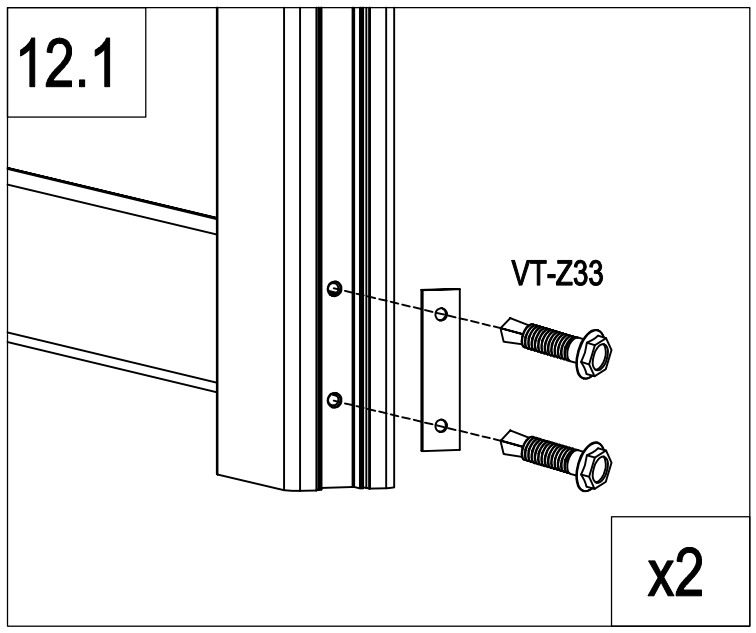

	VT-C1	1
	SR-D3	2
	Dr-28	2
	VT-Z33	4

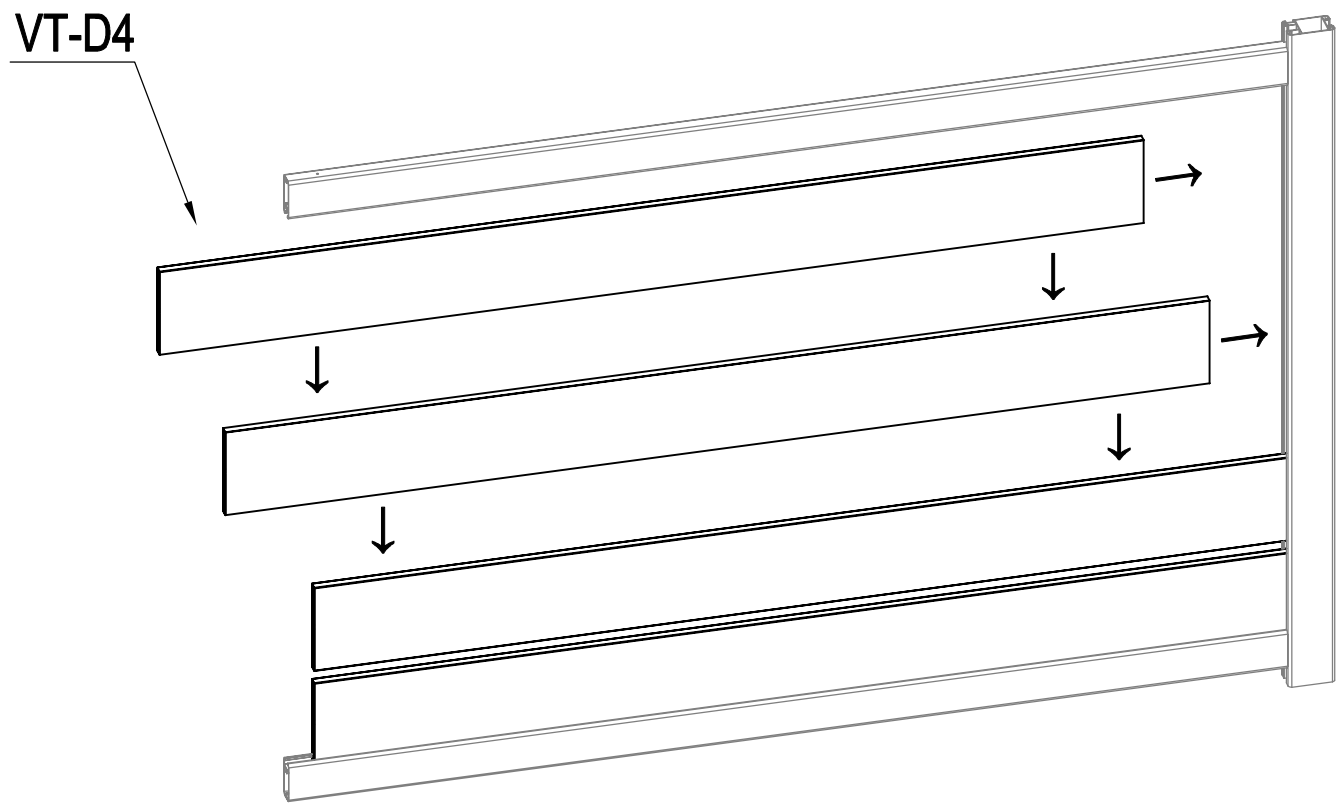

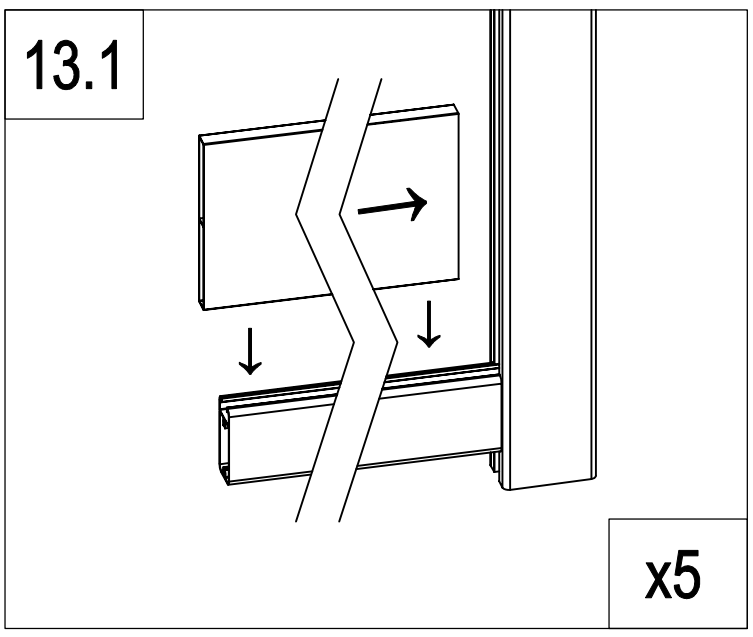

	VT-D4	5

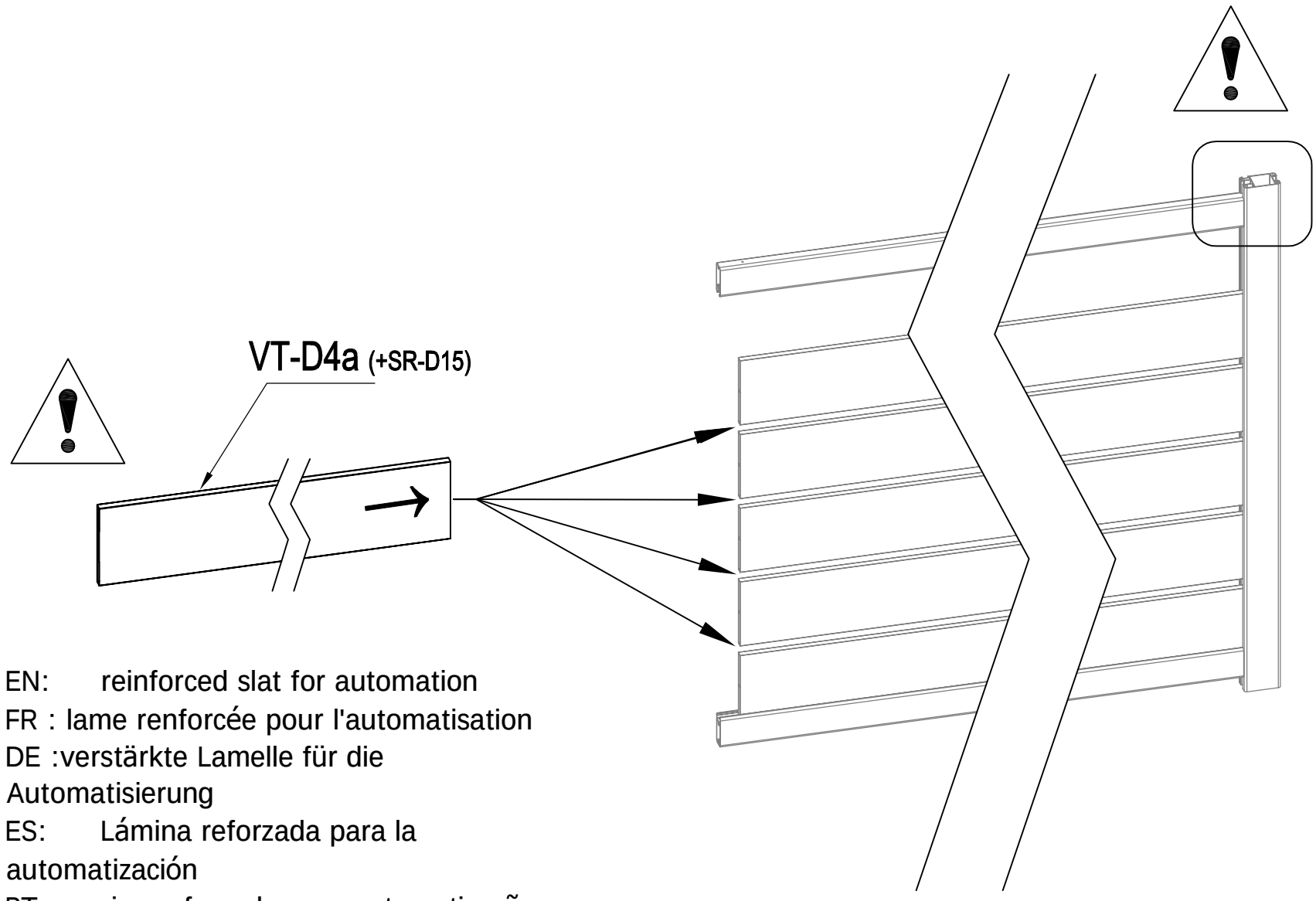

EN: reinforced slat for automation
FR : lame renforcée pour l'automatisation
DE :verstärkte Lamelle für die Automatisierung
ES: Lámina reforzada para la automatización
PT: ripa reforçada para automatização
IT: lamella rinforzata per l'automazione
NL: versterkte lat voor automatisering
PL: wzmocniona listwa do automatyzacji

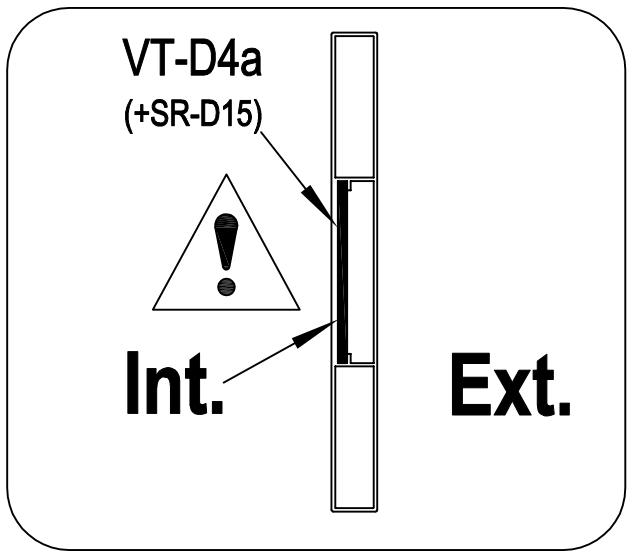

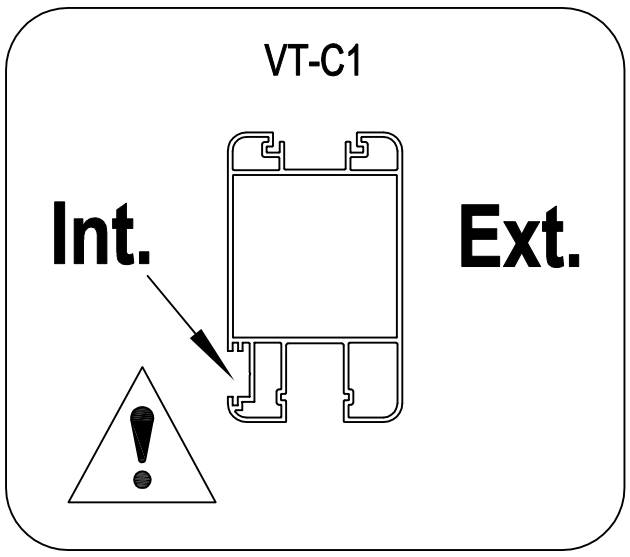

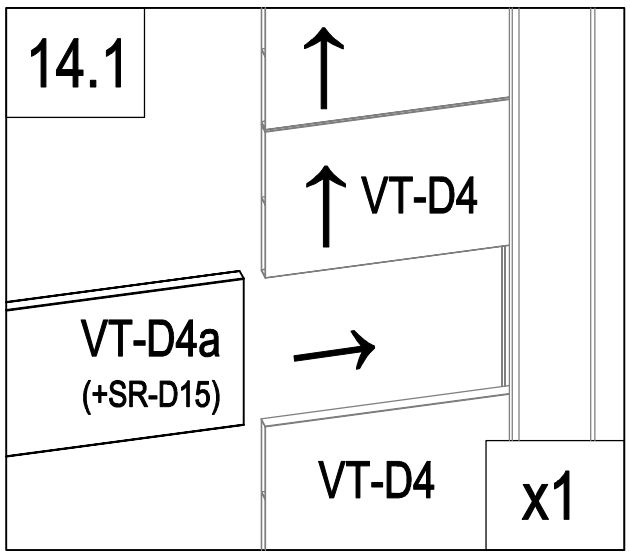

	VT-C4a (+SR-C15)	1

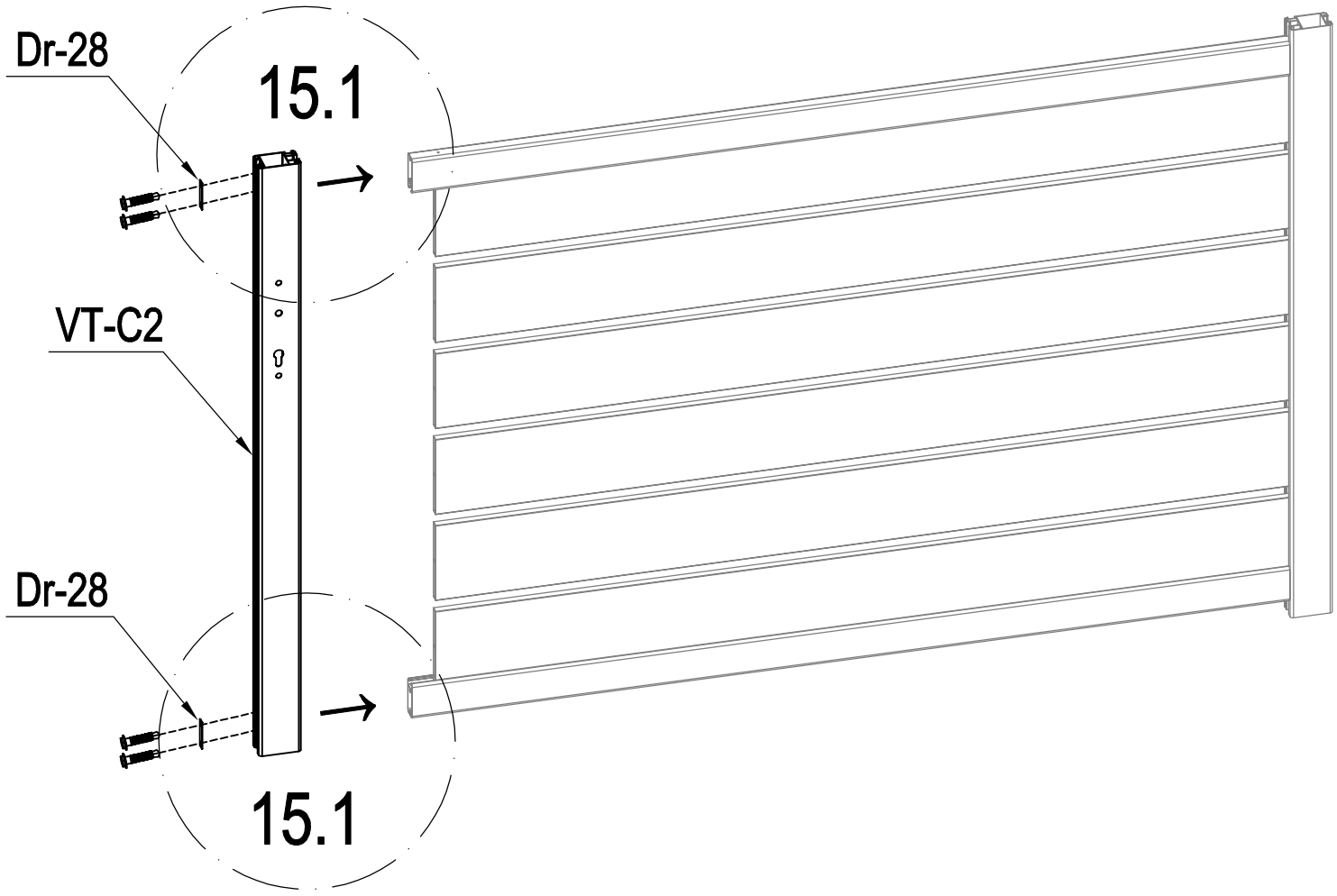

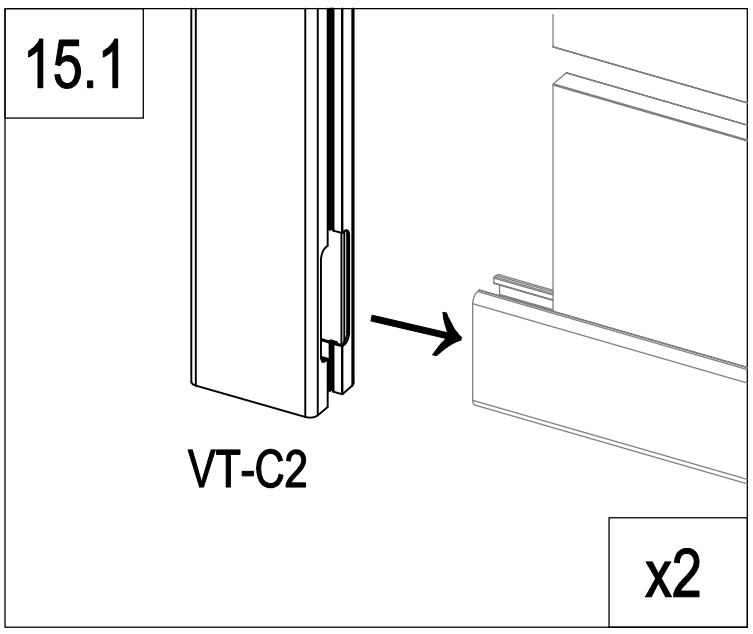

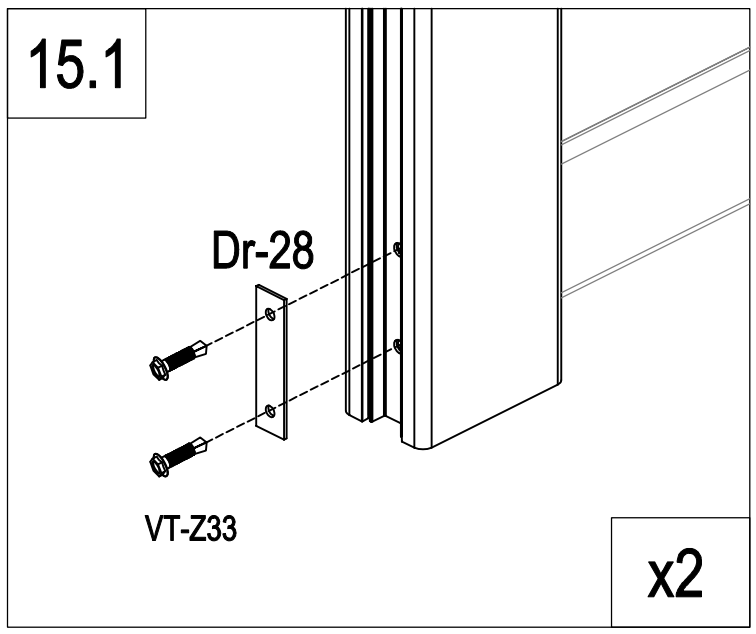

	VT-C2	1
	Dr-28	2
	VT-Z33	4

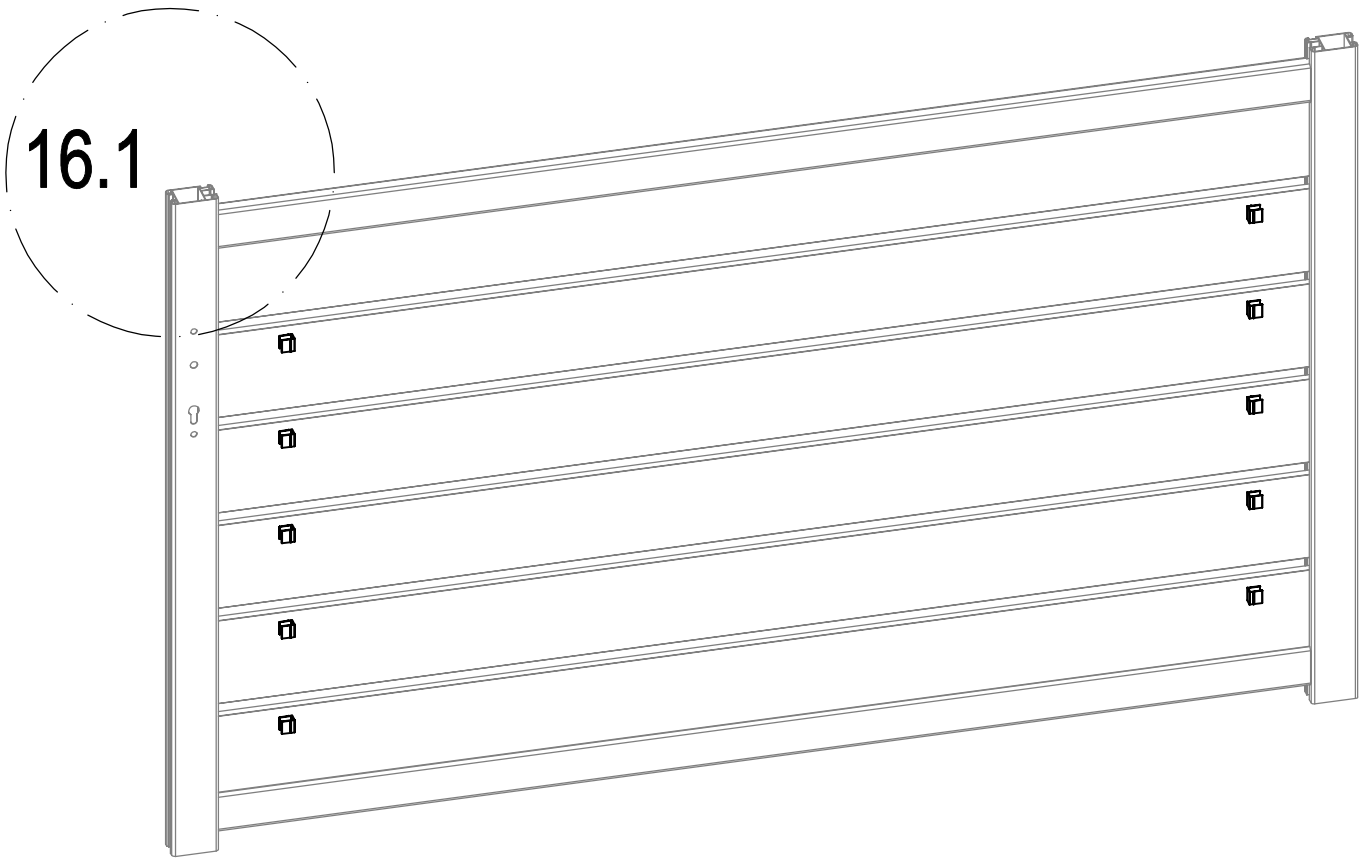

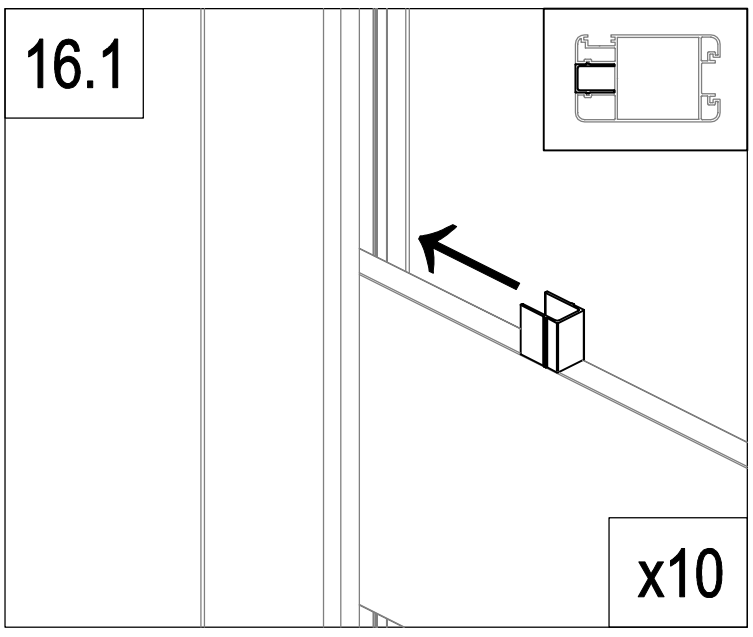

	VT-A6	10

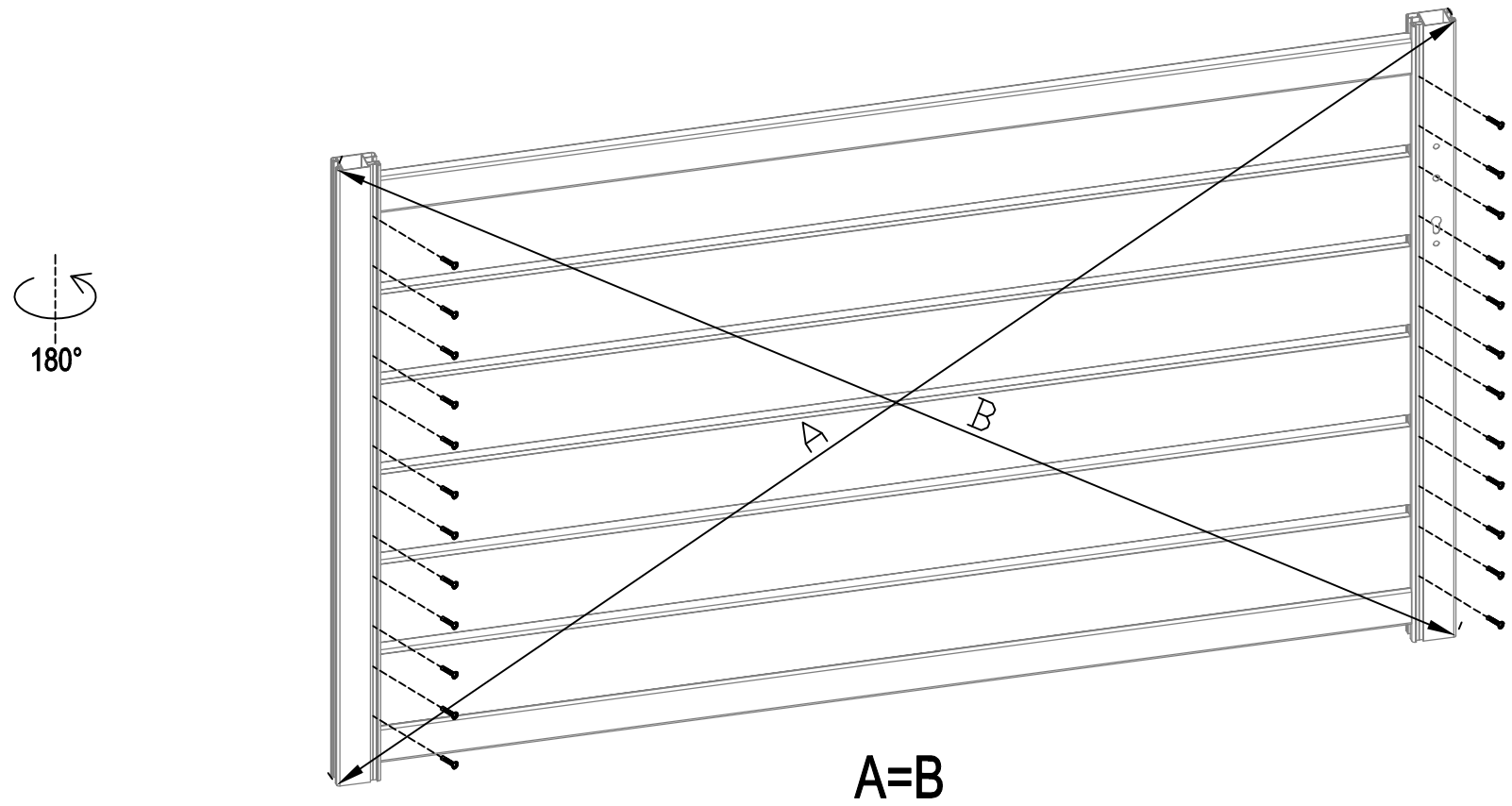

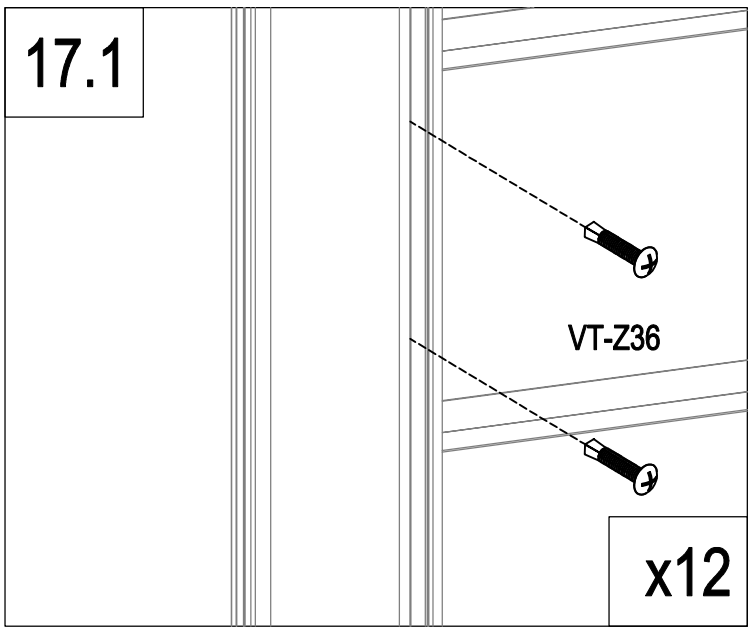

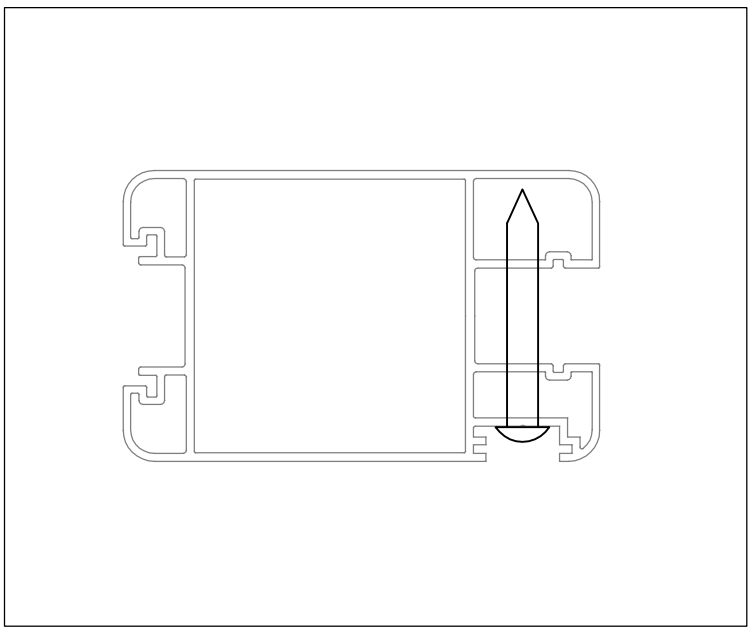

	VT-Z36	24

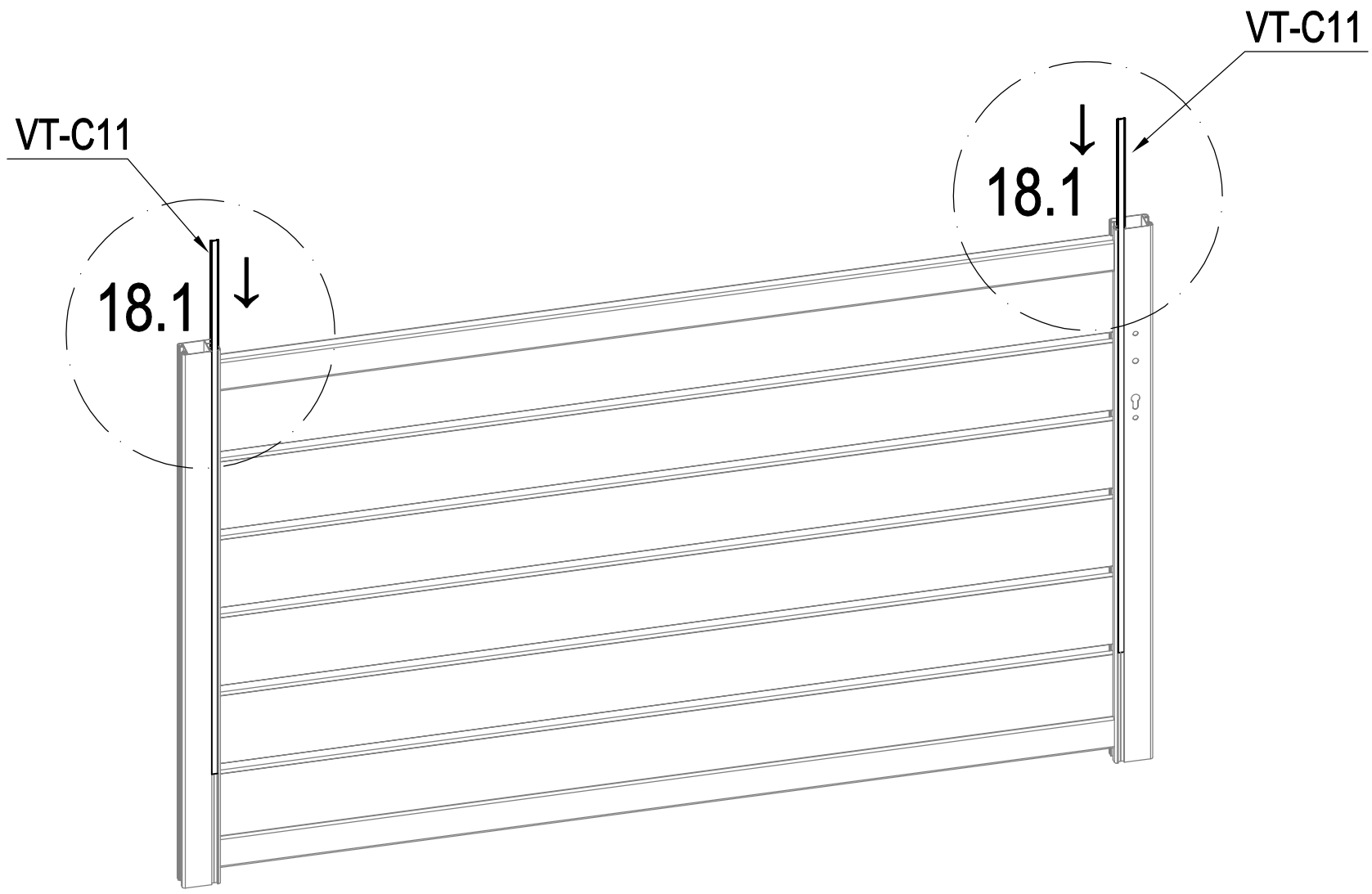

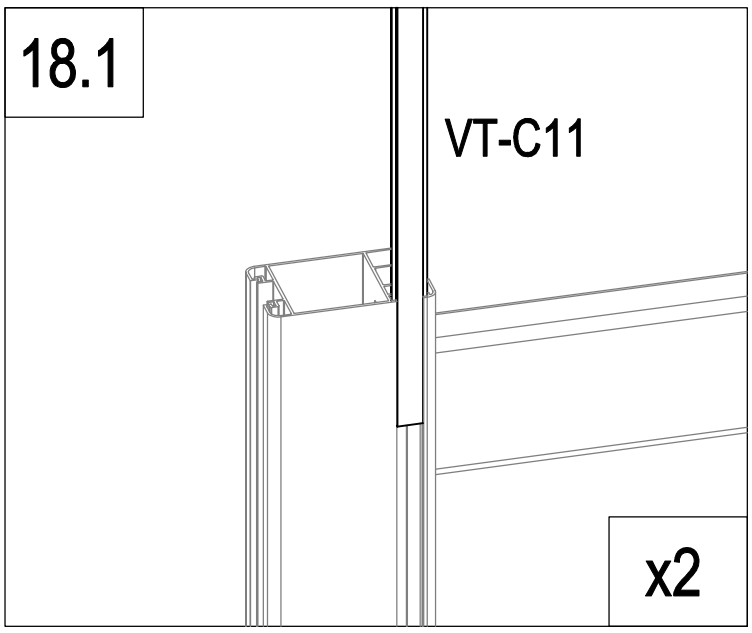

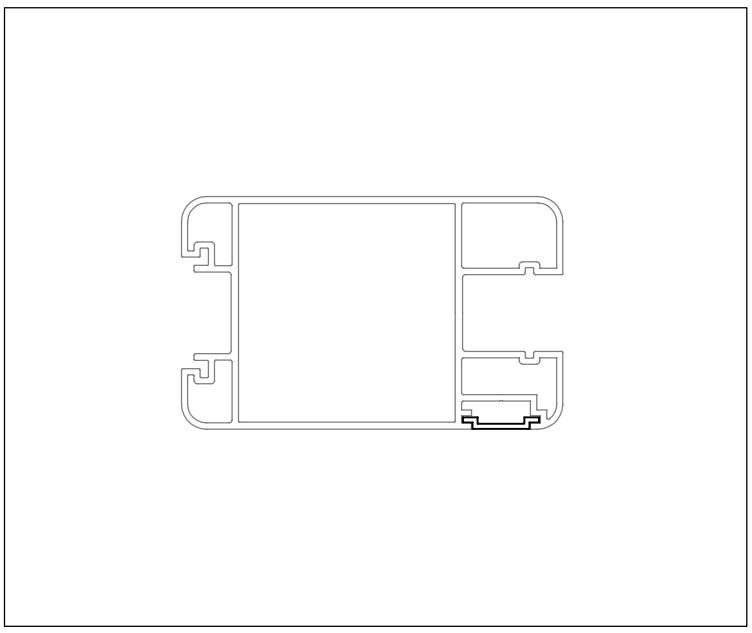

	VT-C11	2

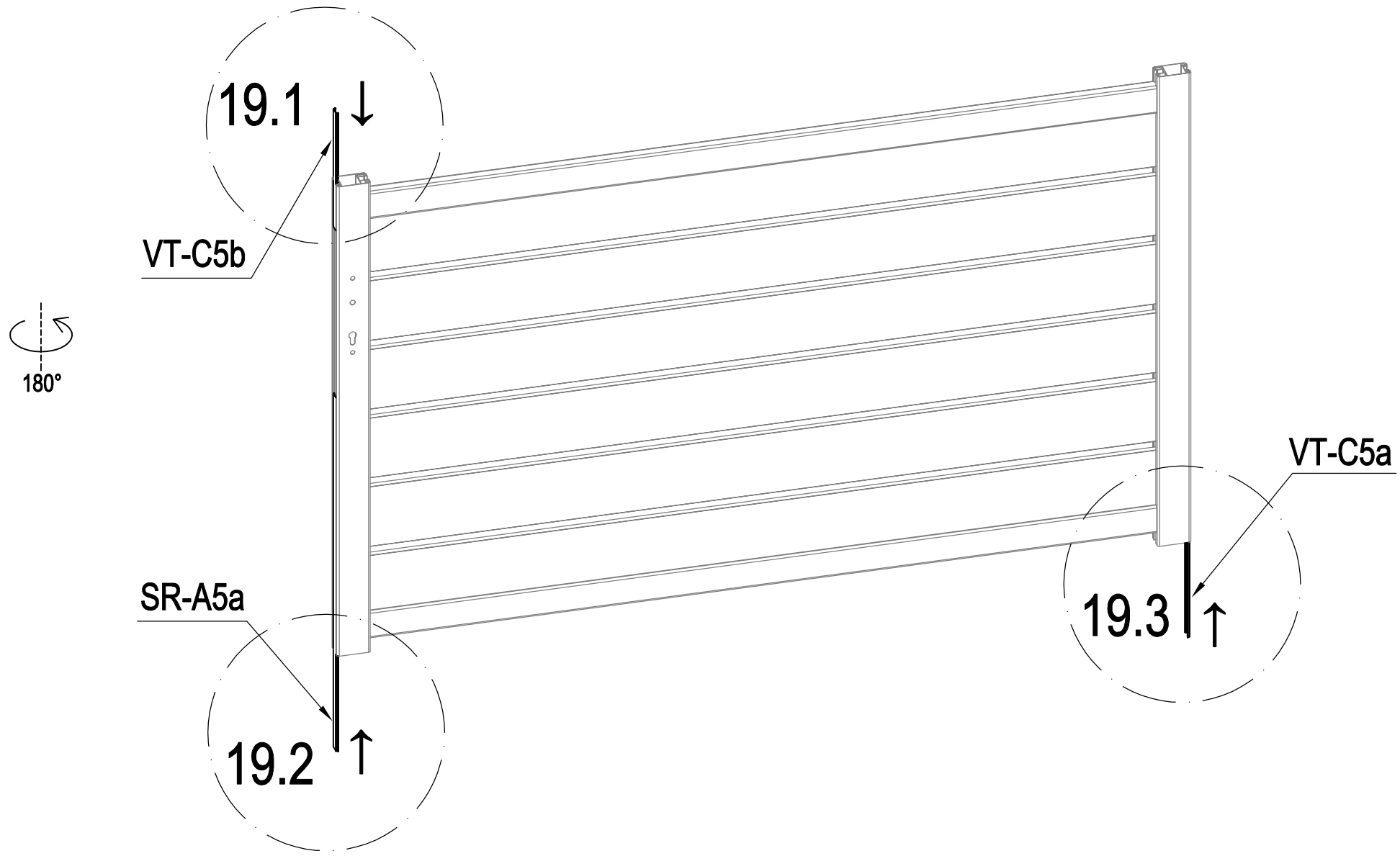

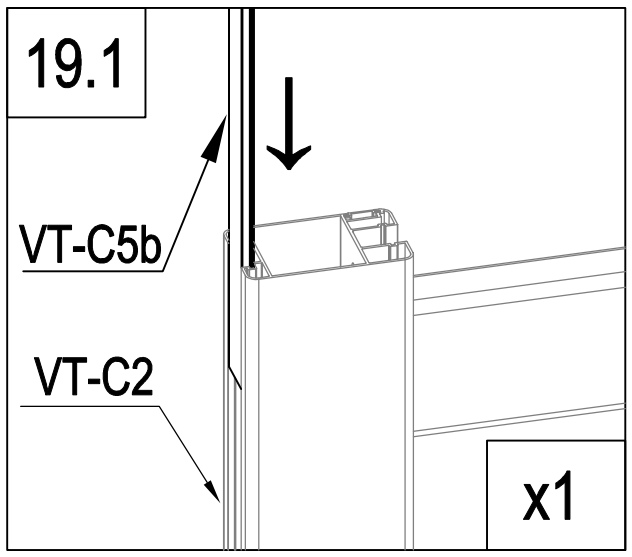

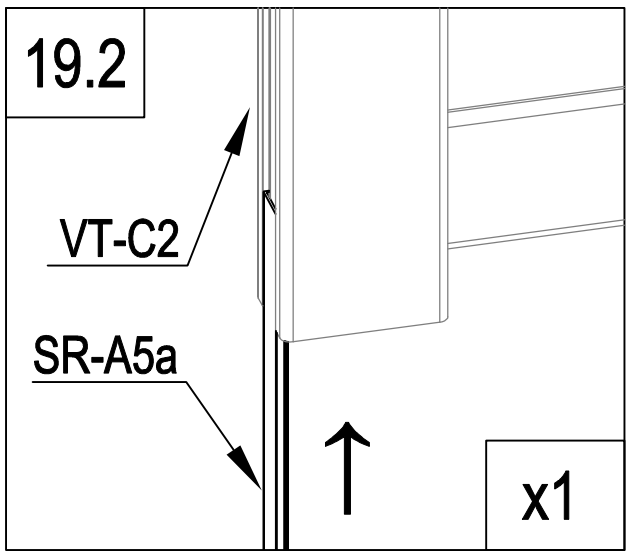

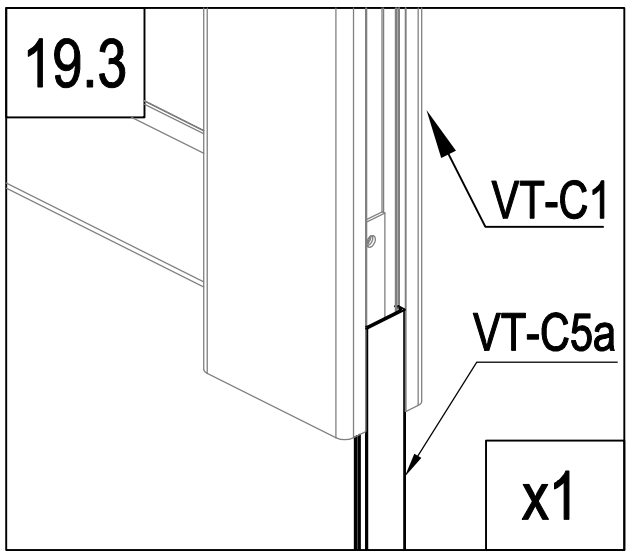

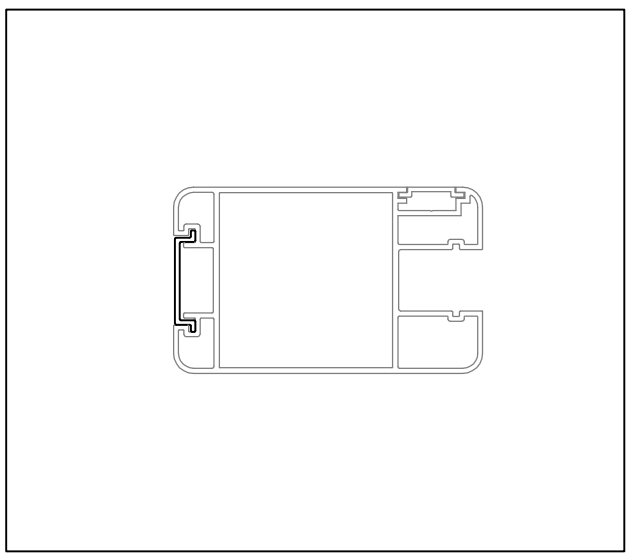

	VT-C5a	1
	VT-C5b	1
	SR-A5a	1

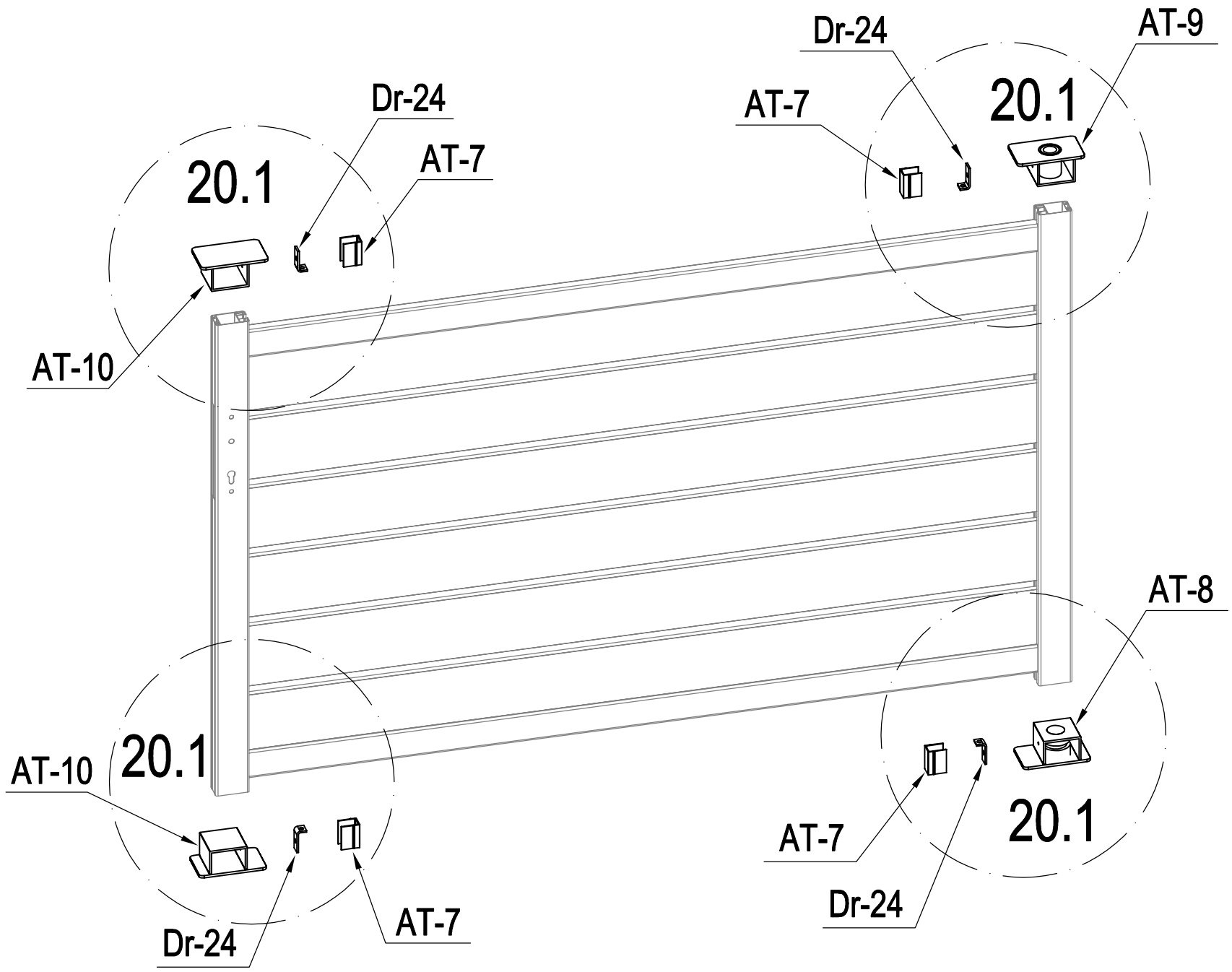

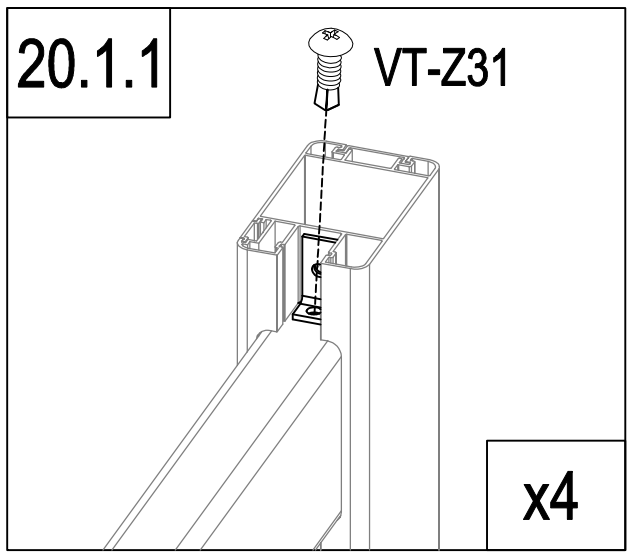

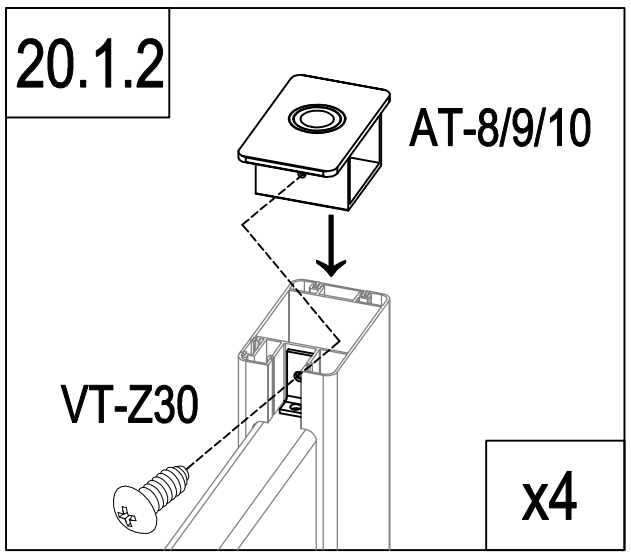

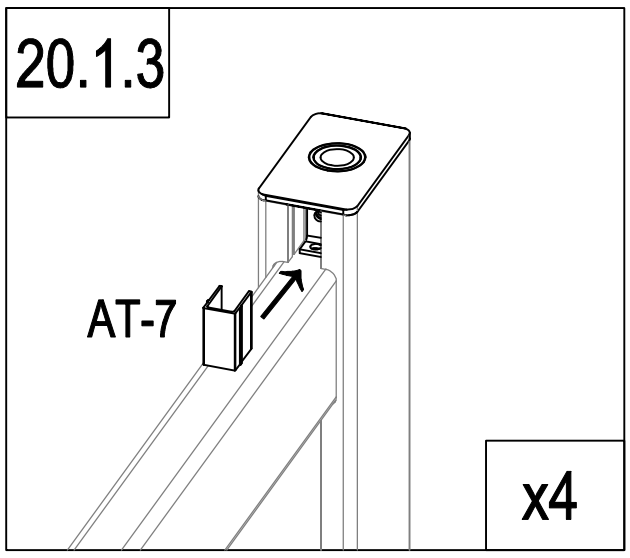

	AT-8	1
	AT-9	1
	AT-10	2
	Dr-24	4

	AT-7	4
	VT-Z30	4
	VT-Z31	4

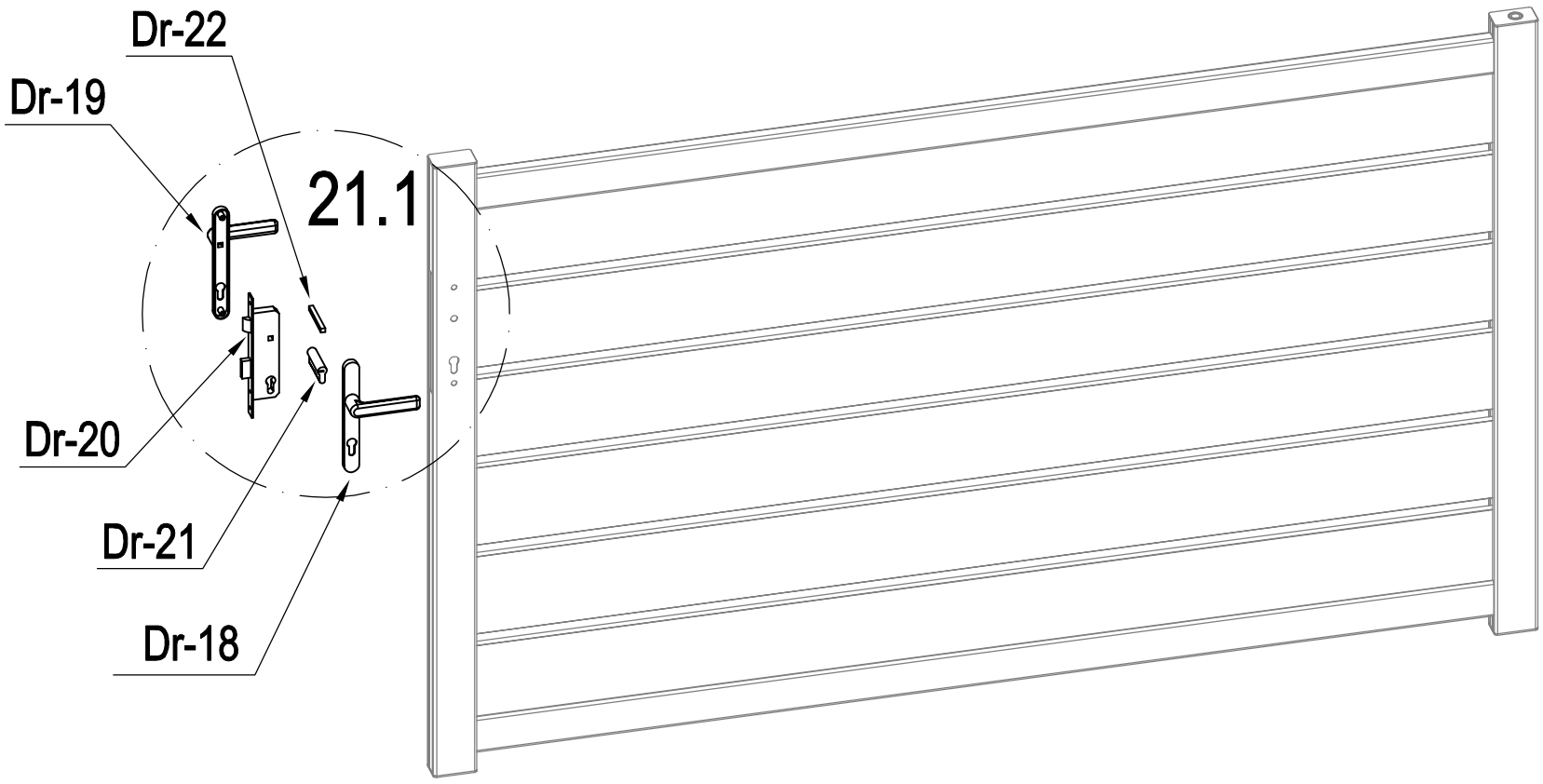

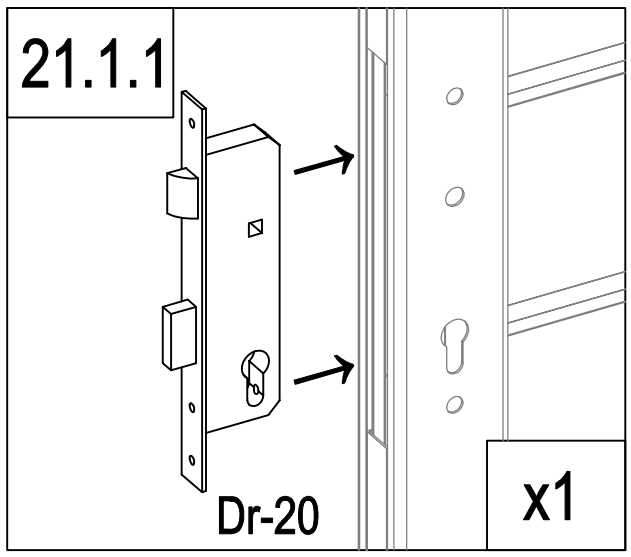

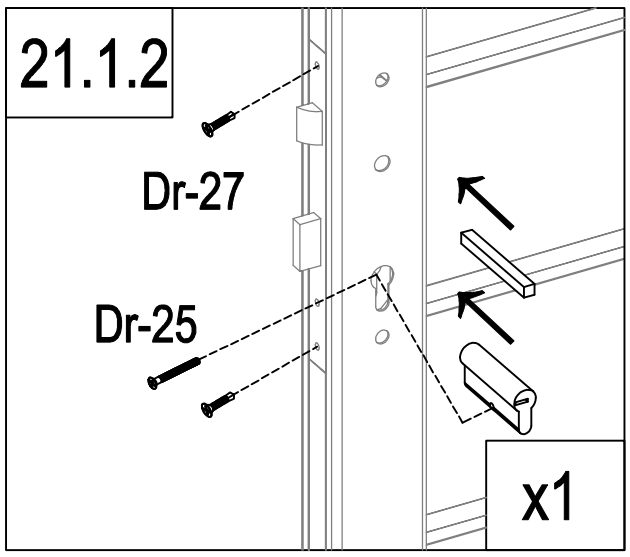

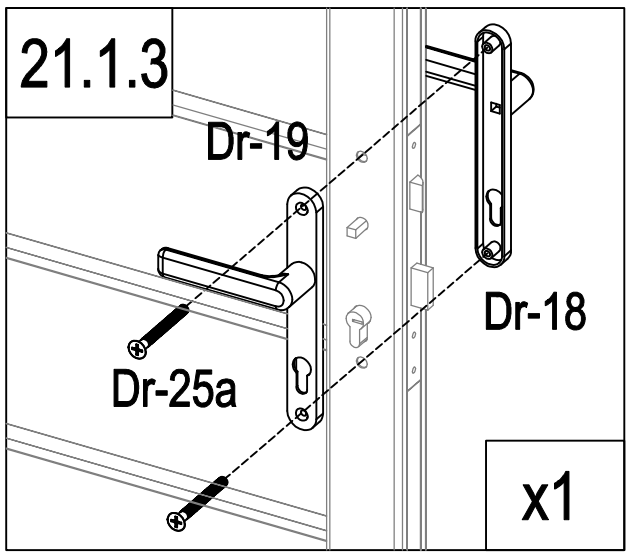

	Dr-20	1
	Dr-21	1
	Dr-22	1
	Dr-25	1

	Dr-18	1
	Dr-19	1
	Dr-25a	2
	Dr-27	2

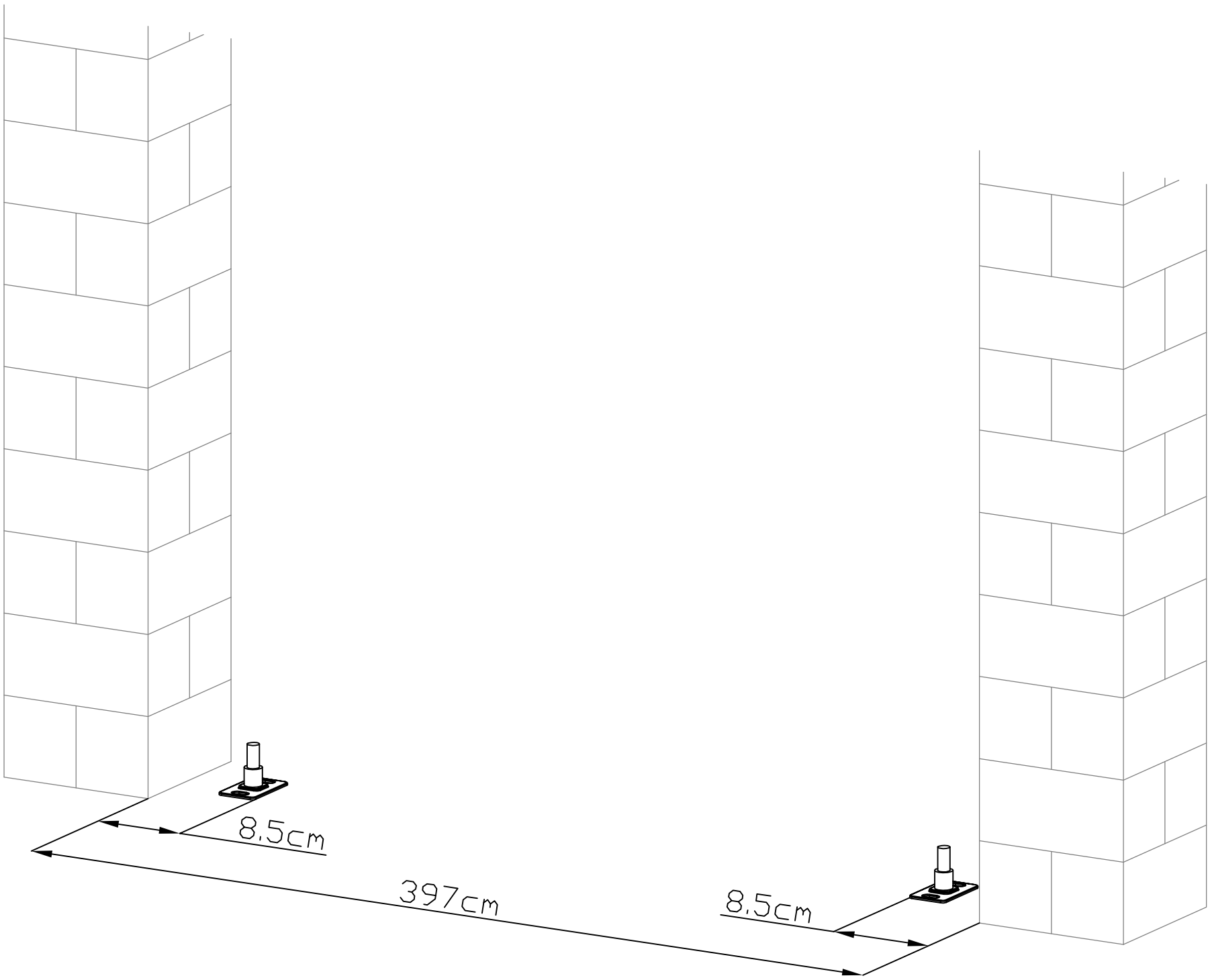

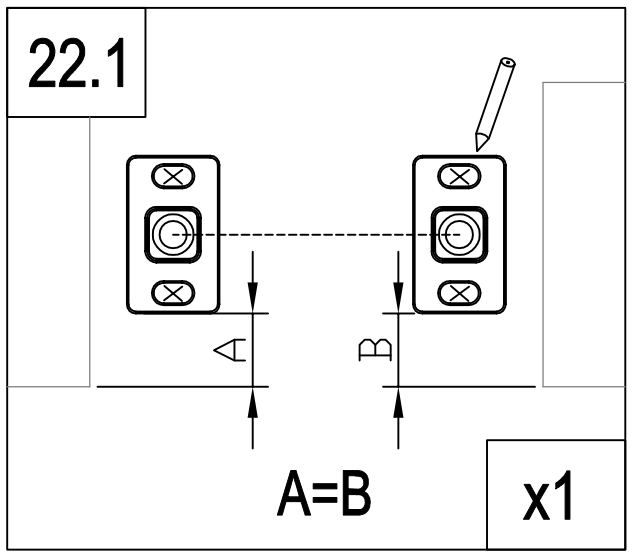

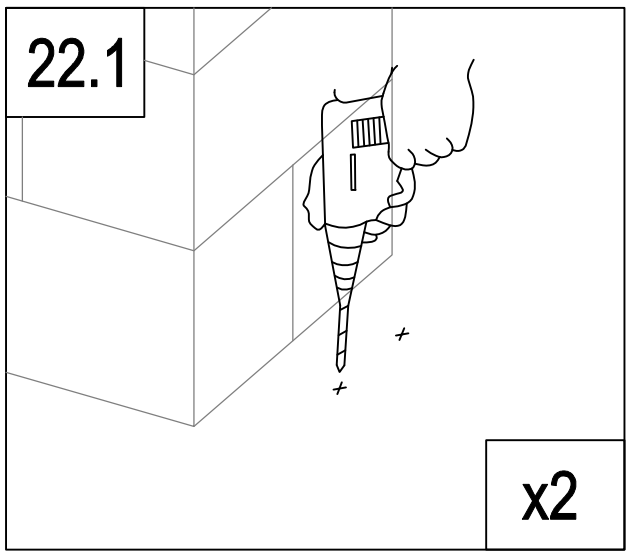

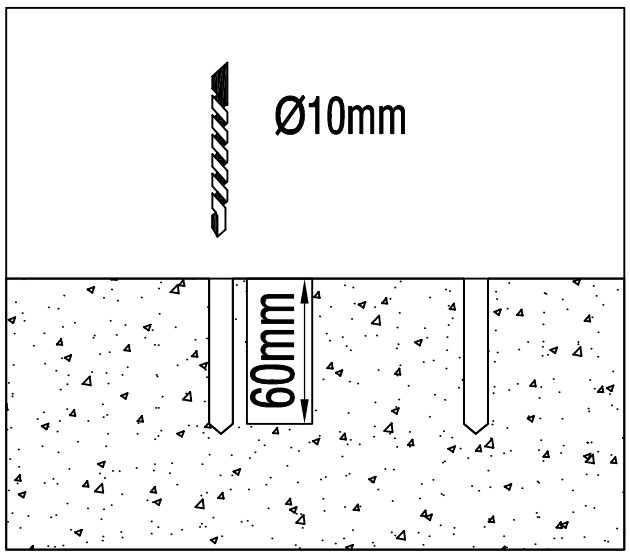

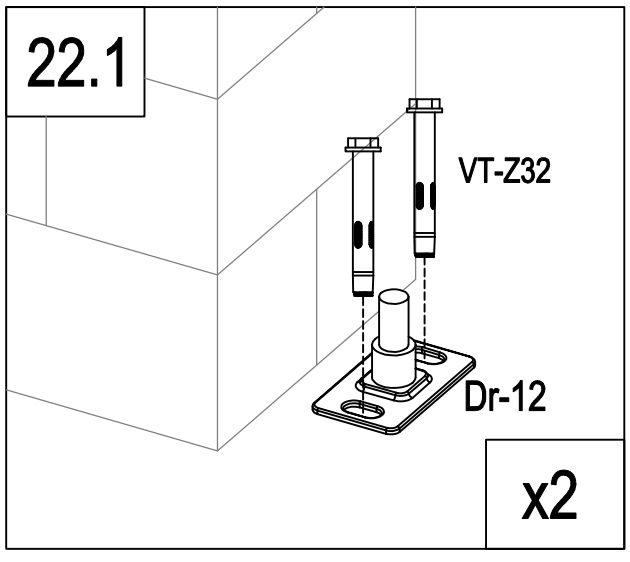

	Dr-12	2
	VT-Z32	4

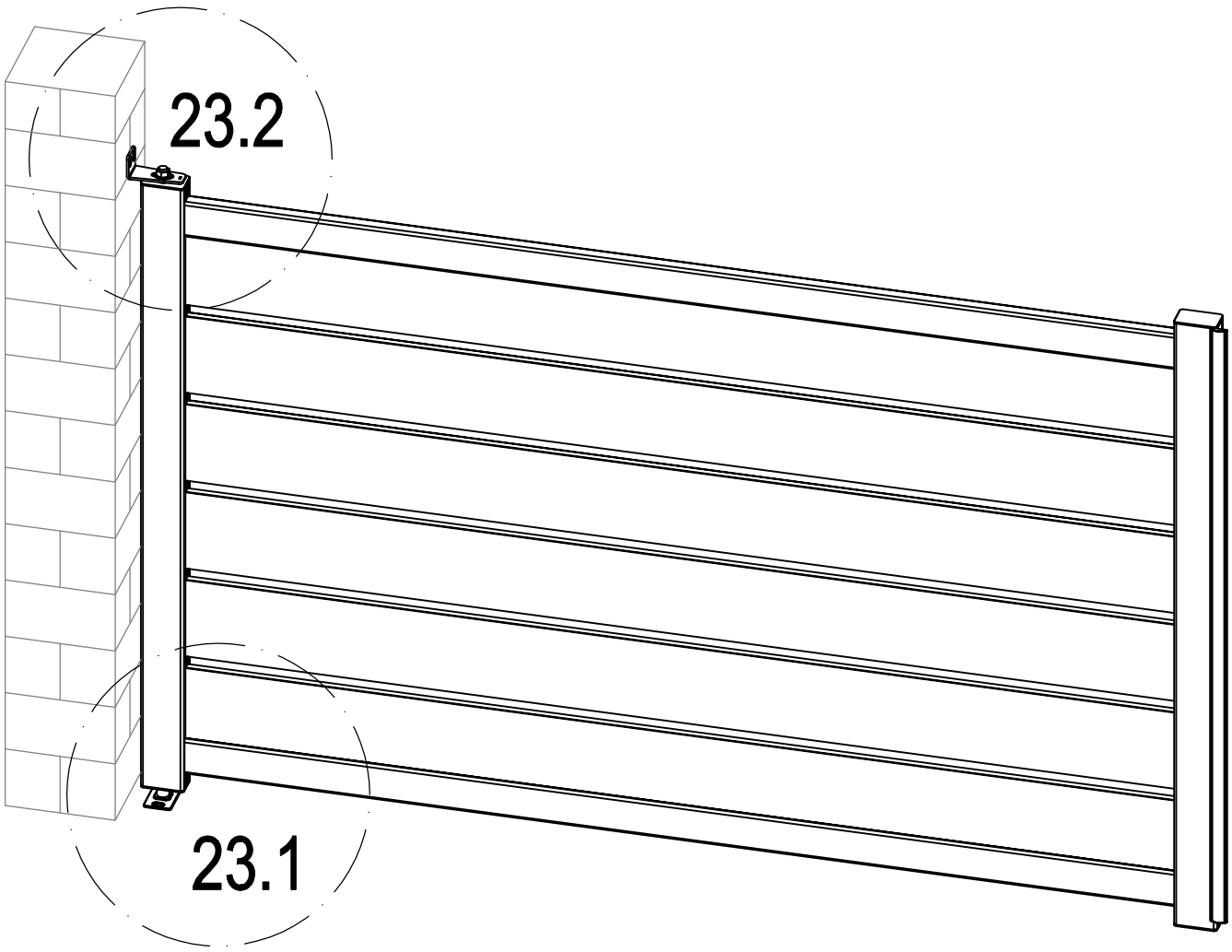

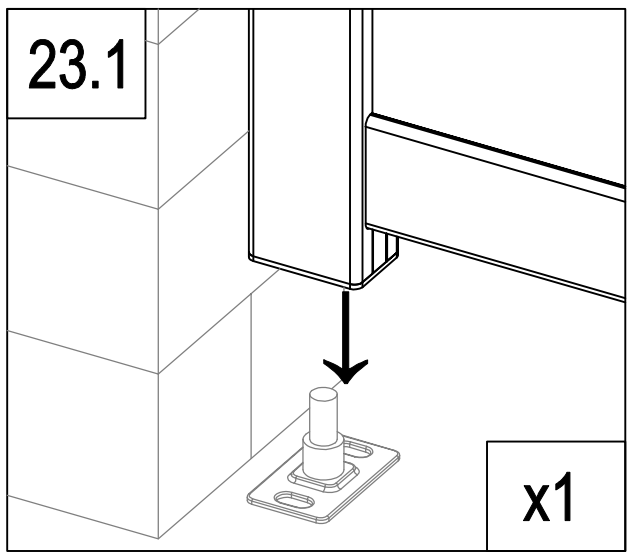

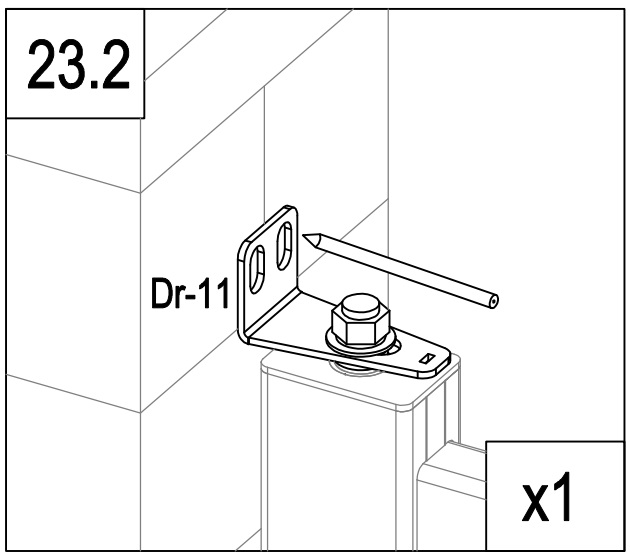

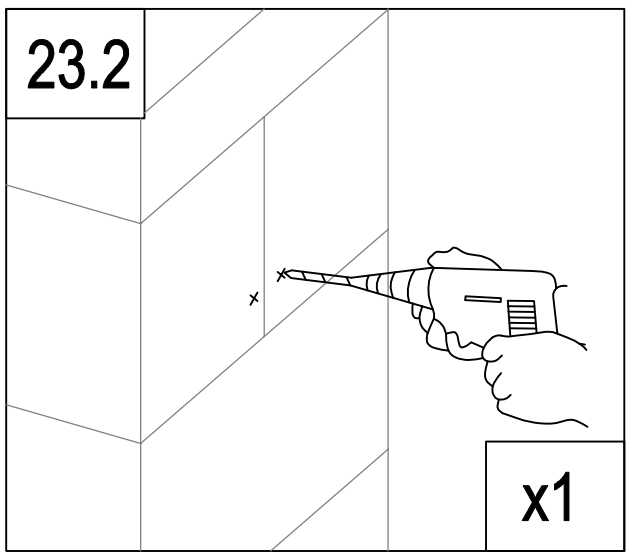

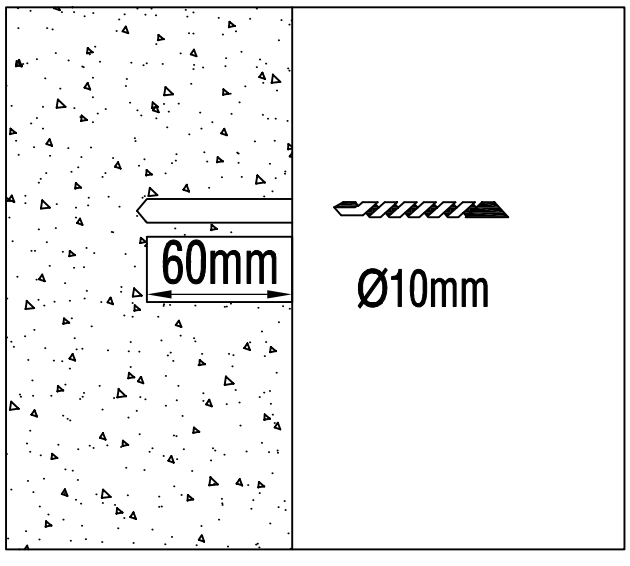

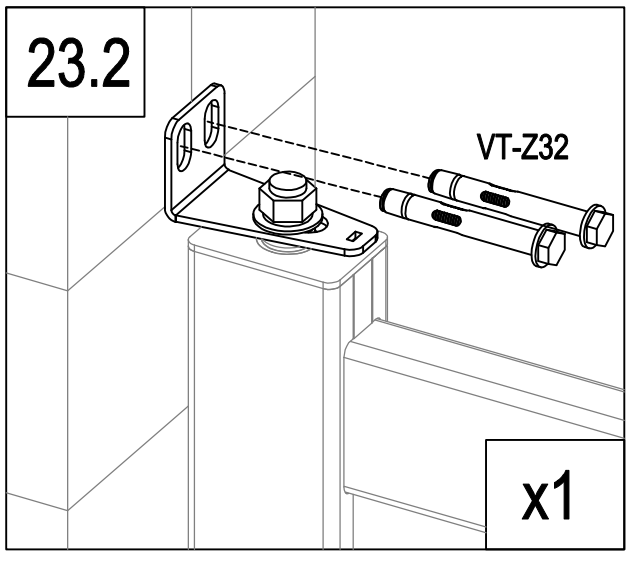

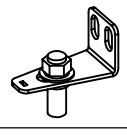	Dr-11	1
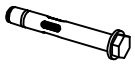	VT-Z32	2

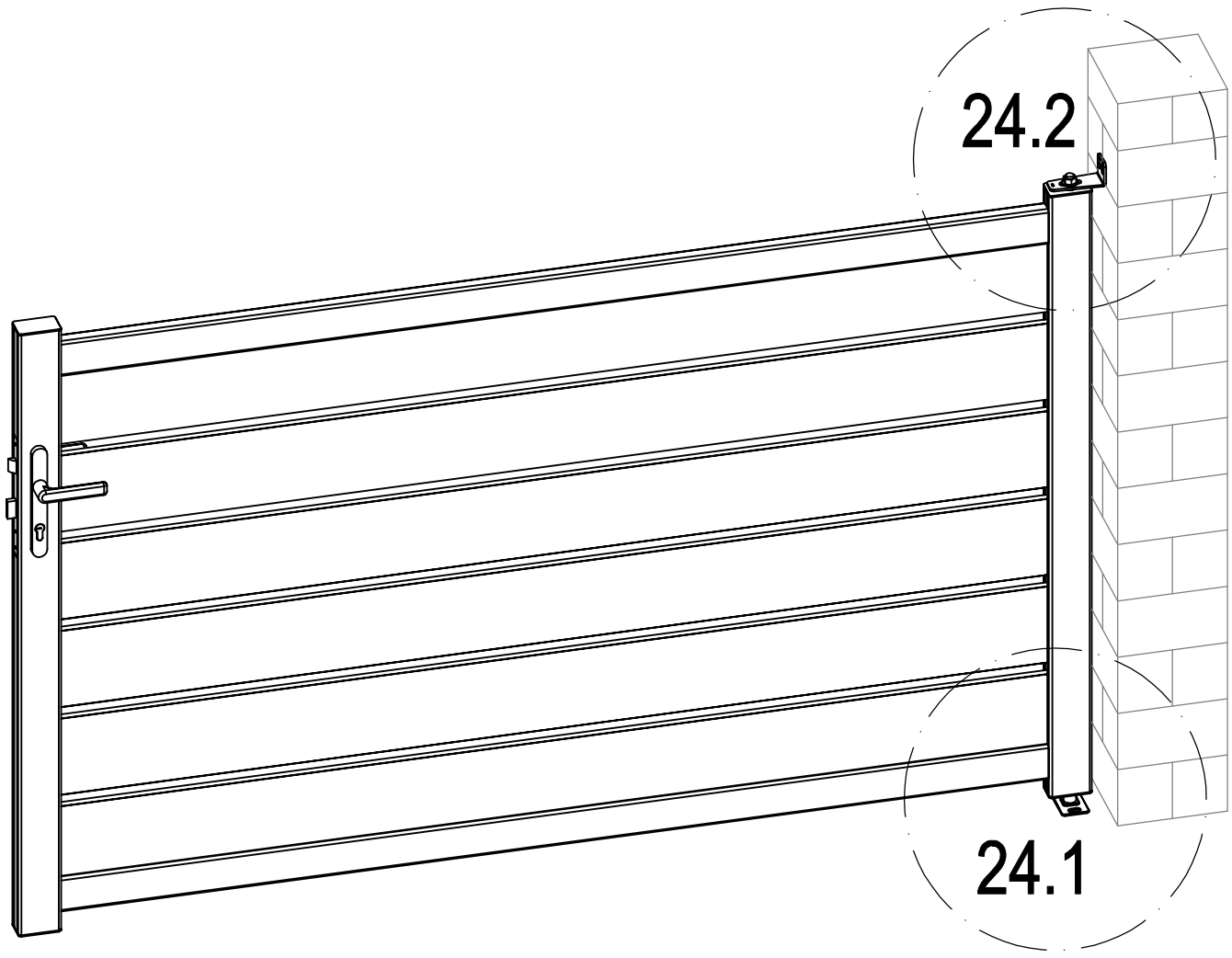

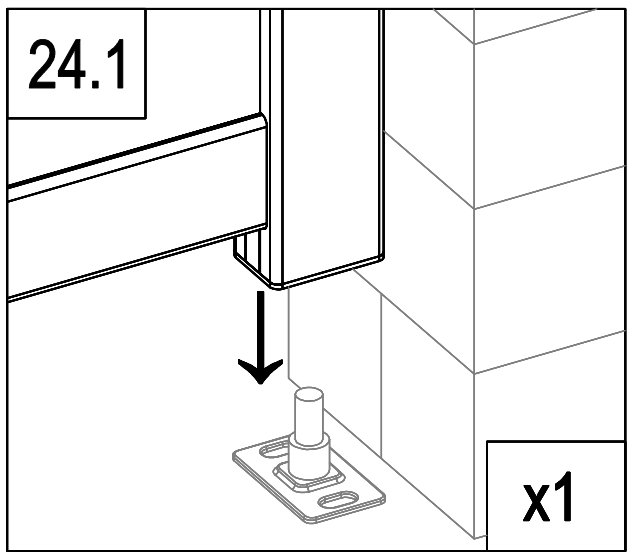

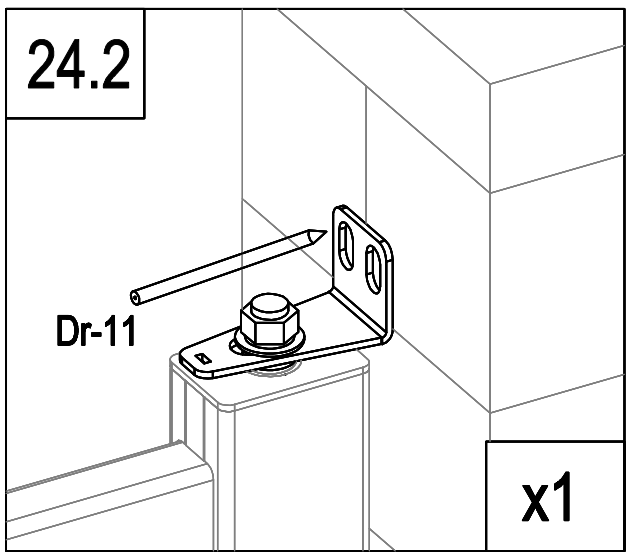

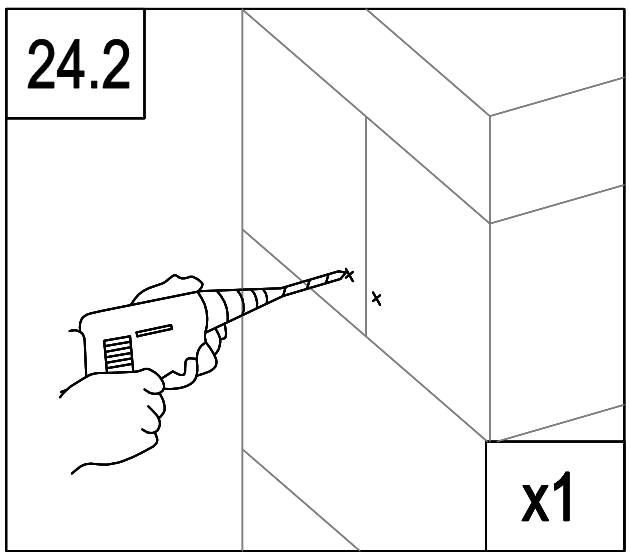

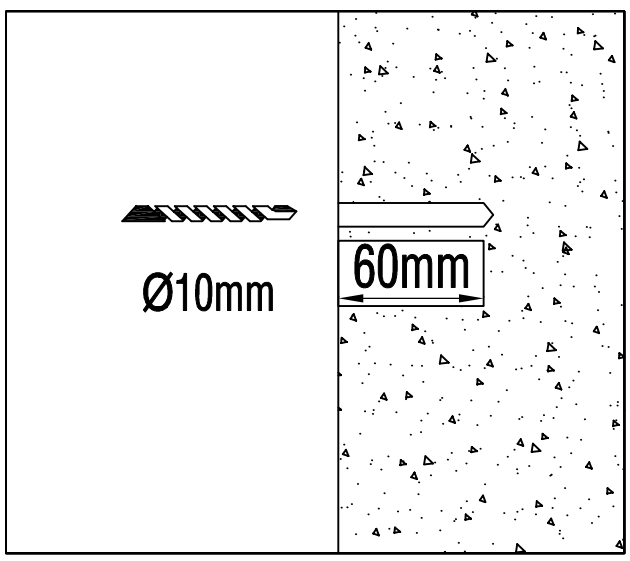

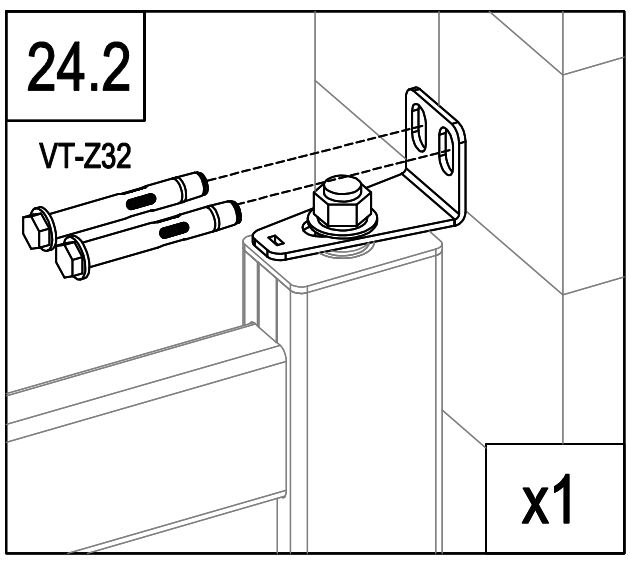

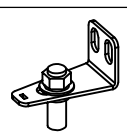	Dr-11	1
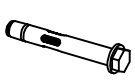	VT-Z32	2

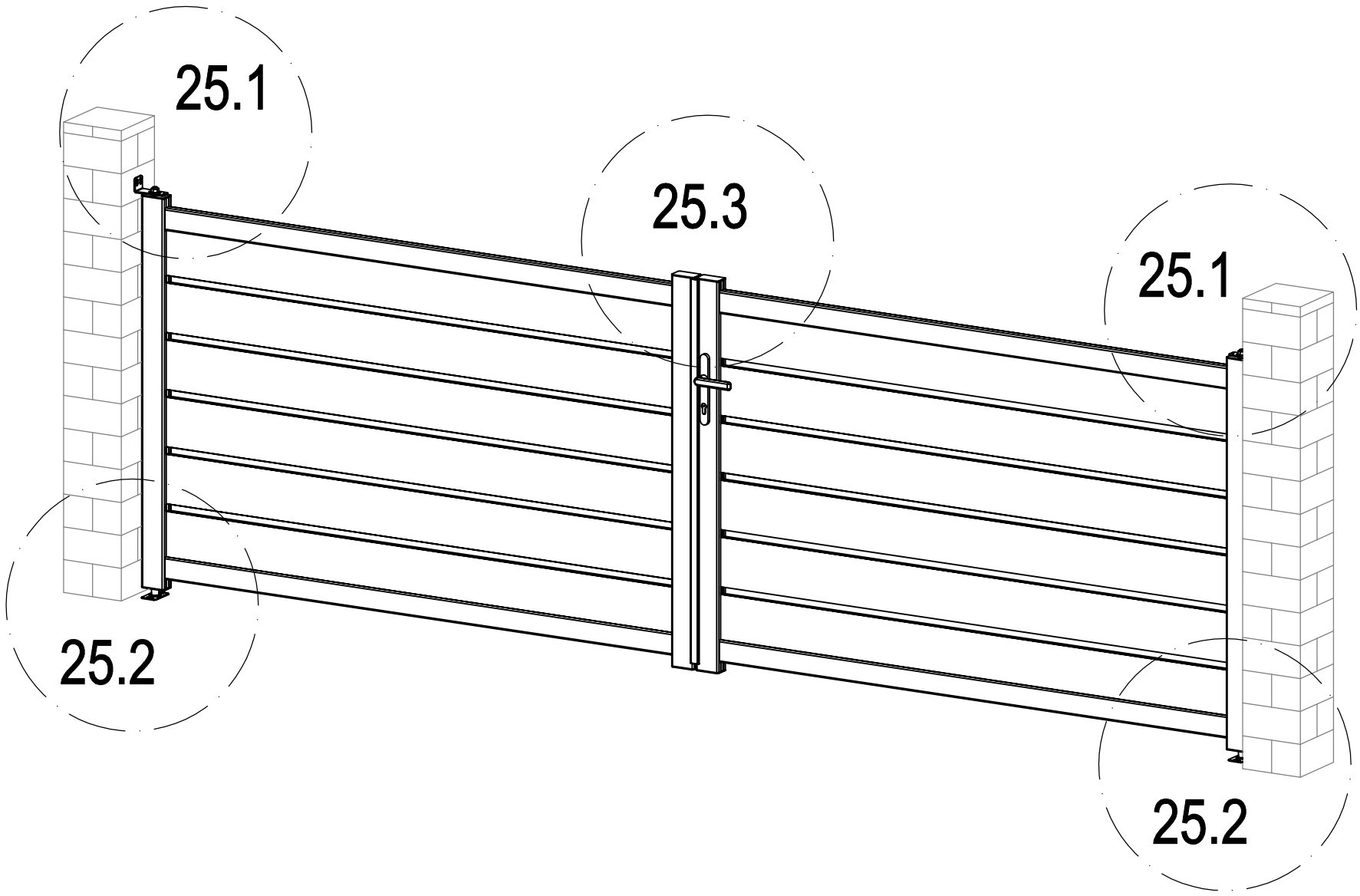

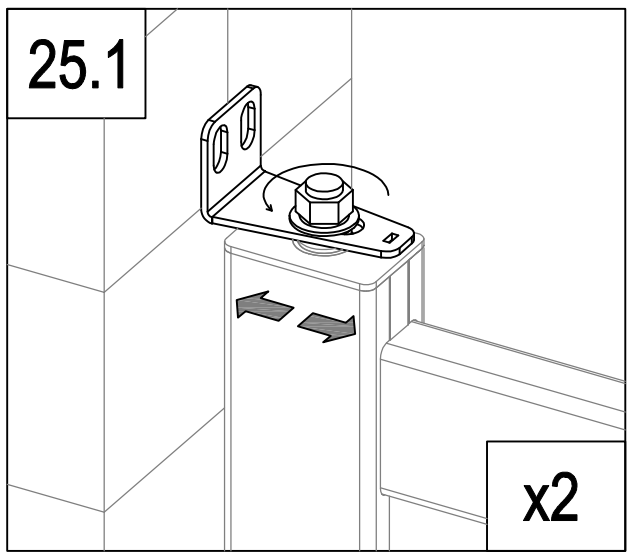

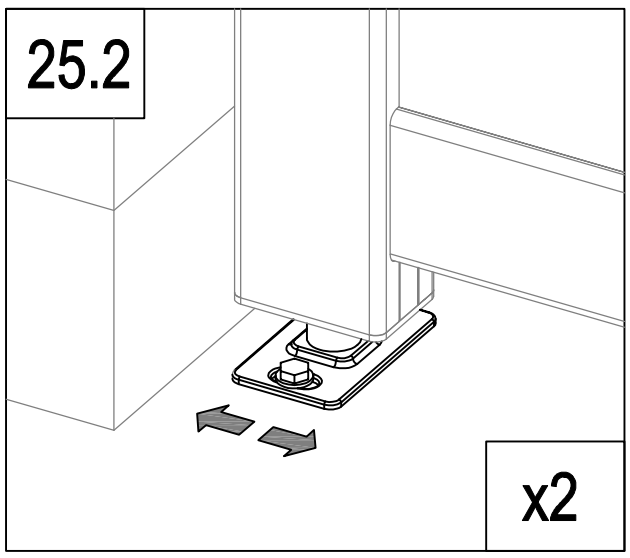

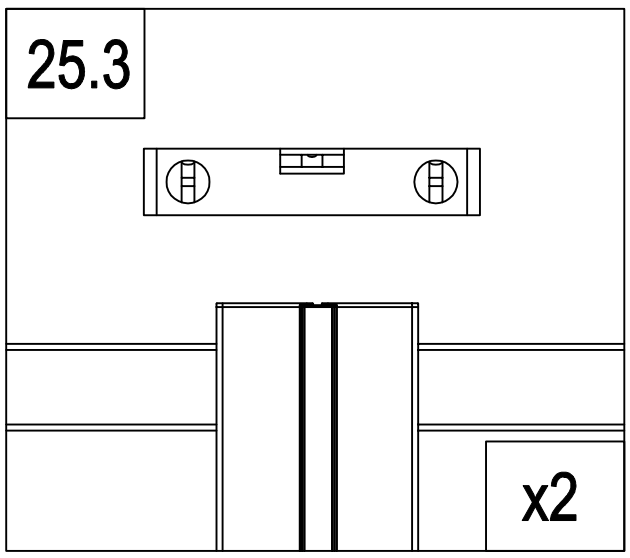

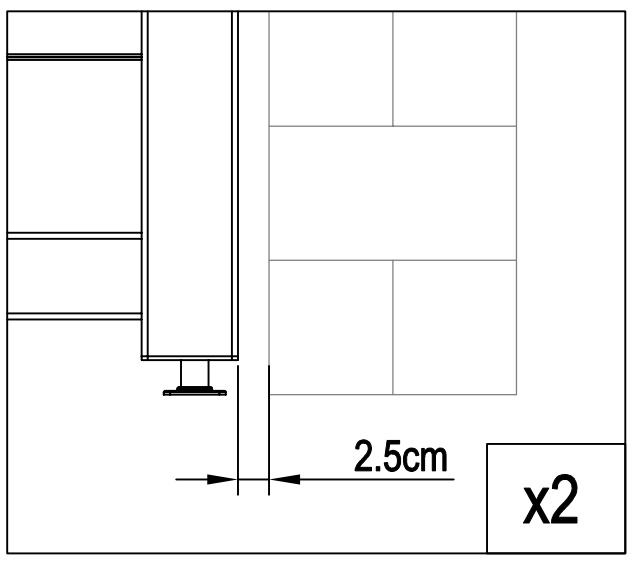

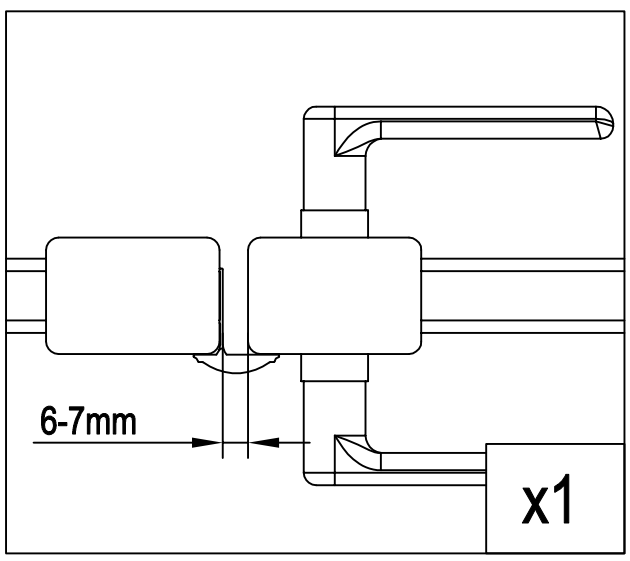

25

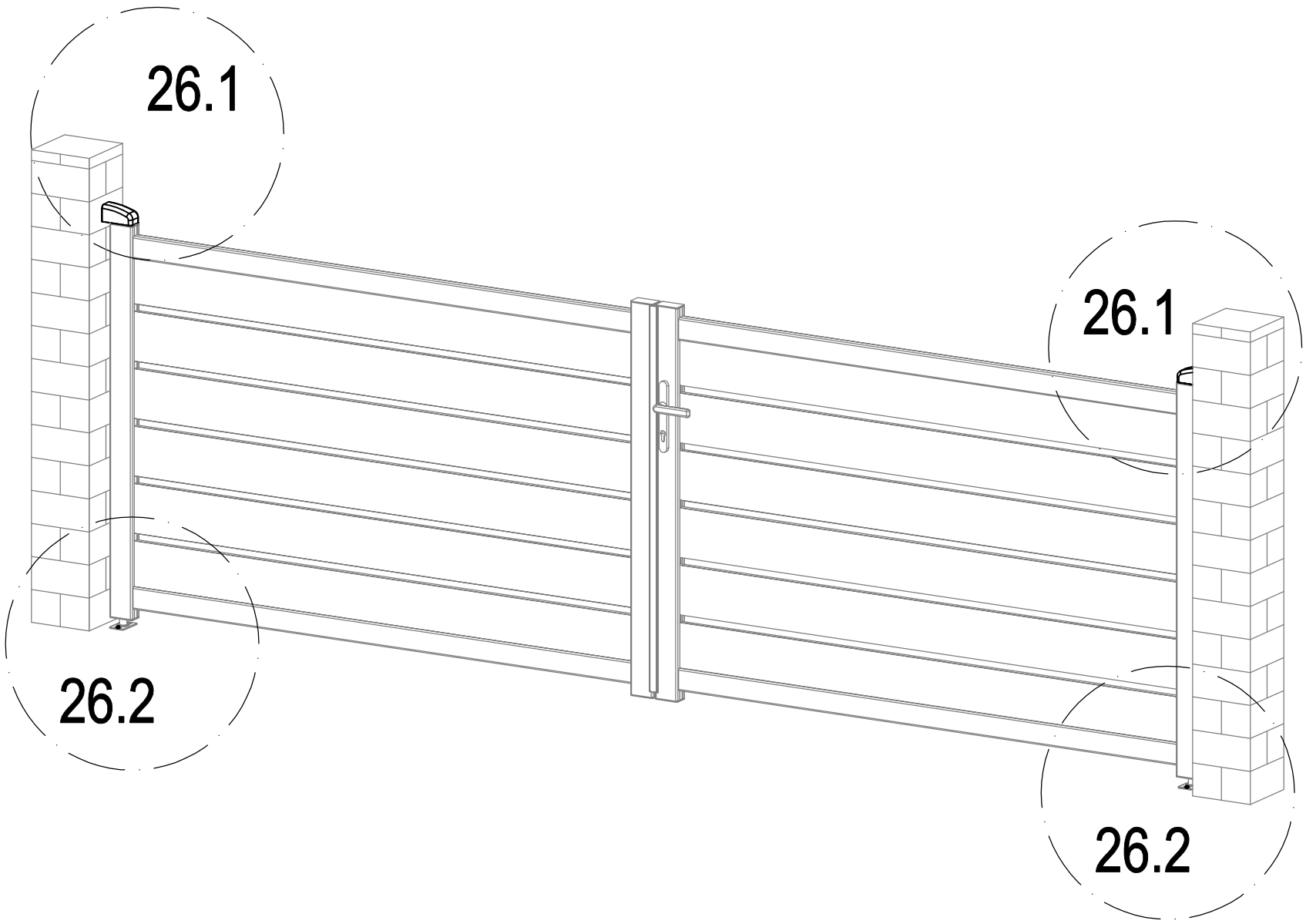

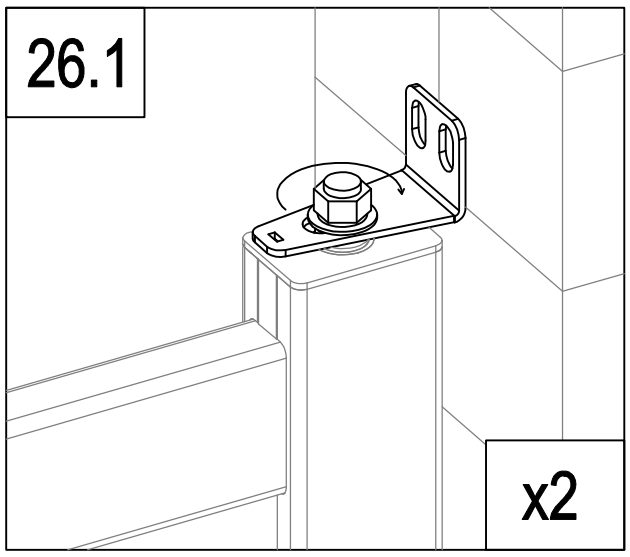

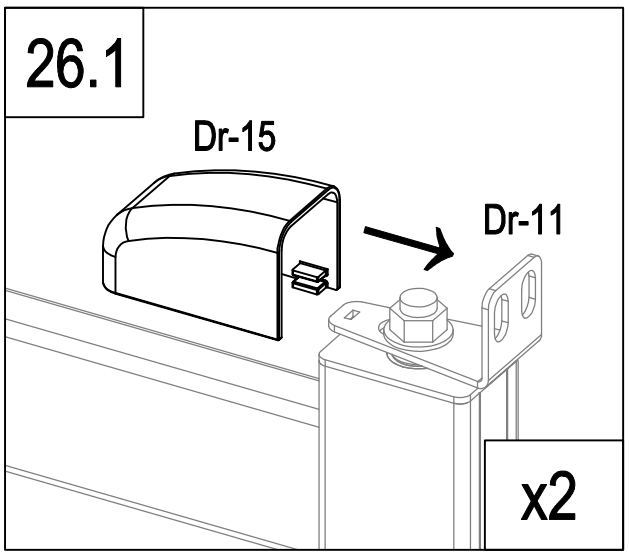

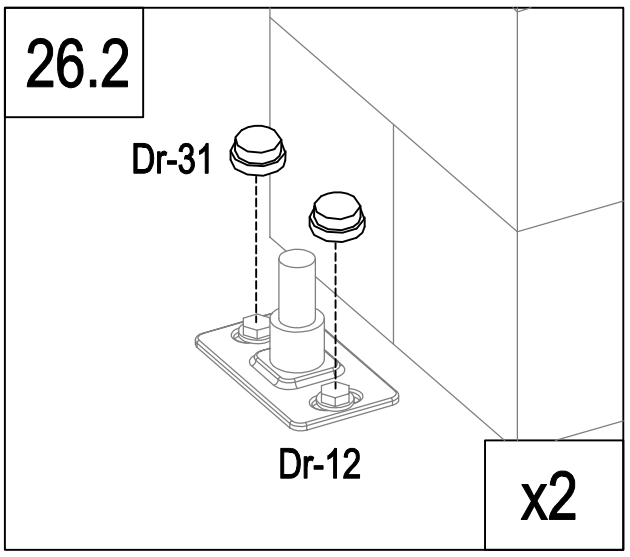

	Dr-15	2
	Dr-31	4

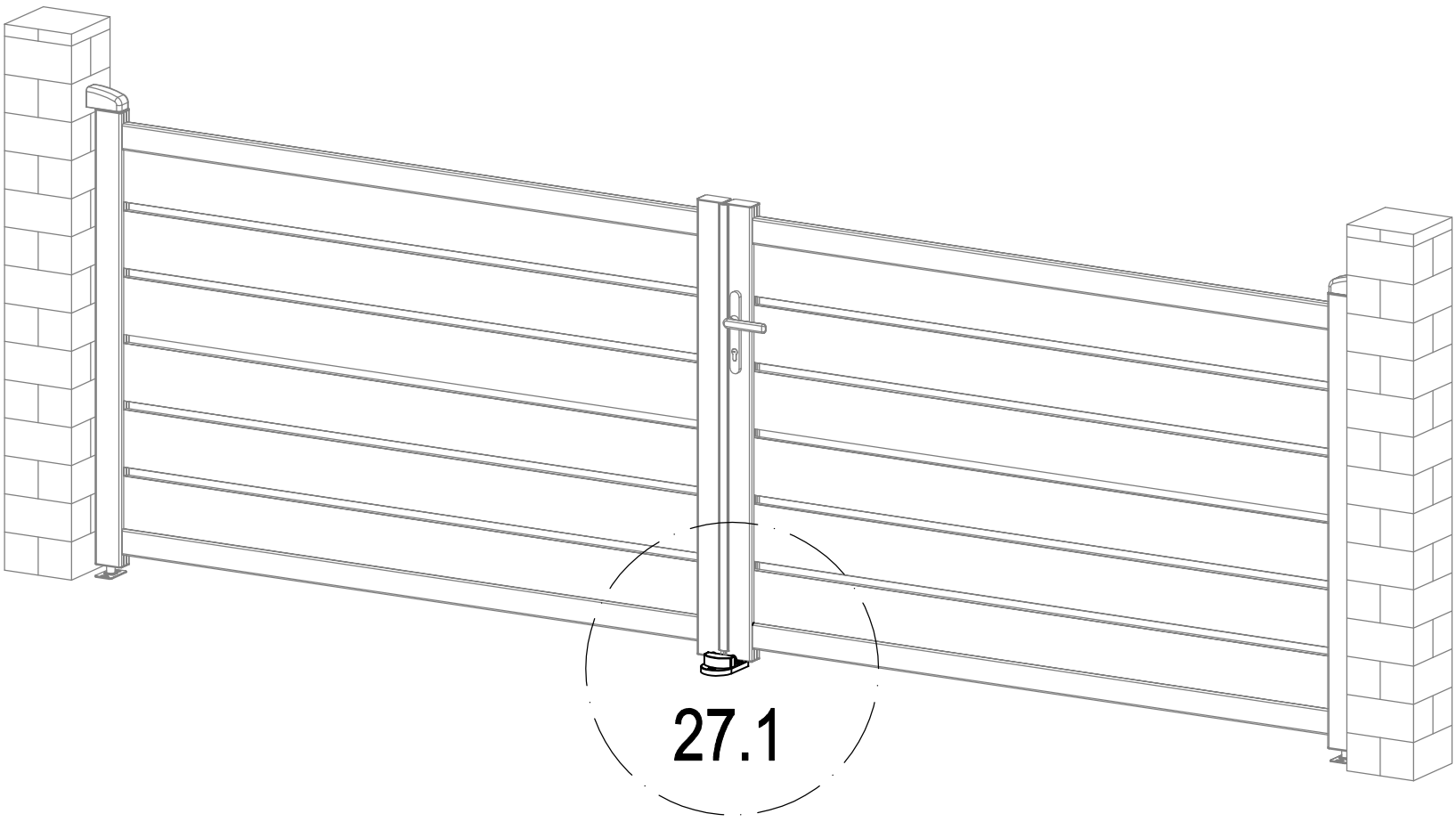

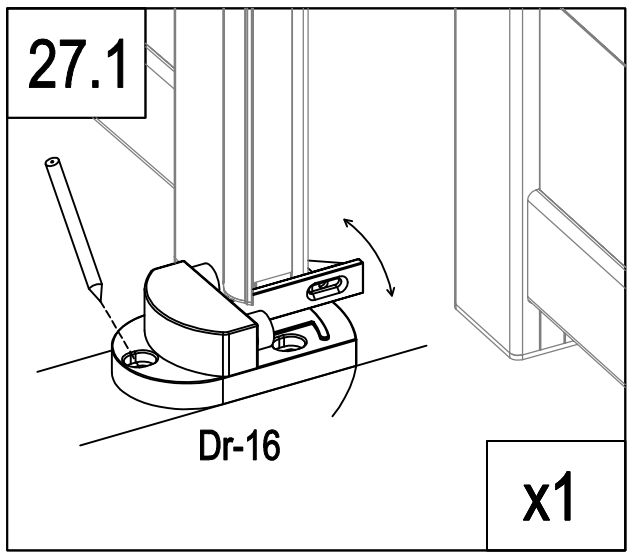

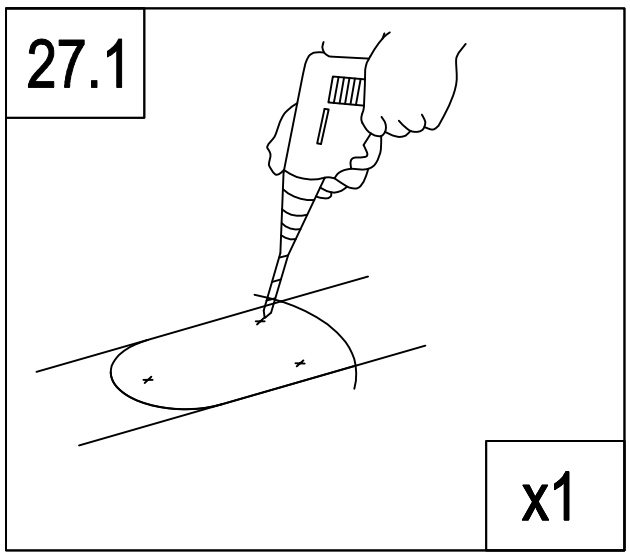

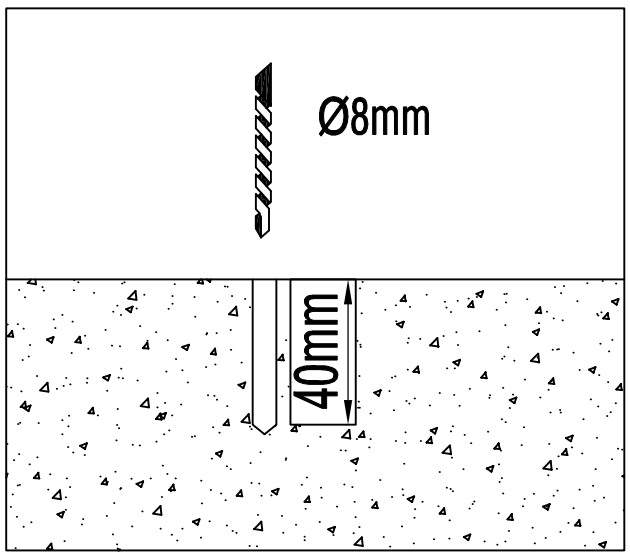

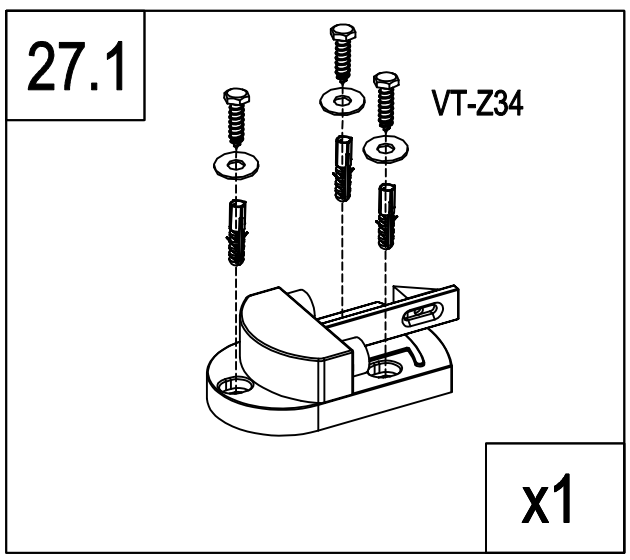

	Dr-16	1
	VT-Z34	3
	VT-Z35	3

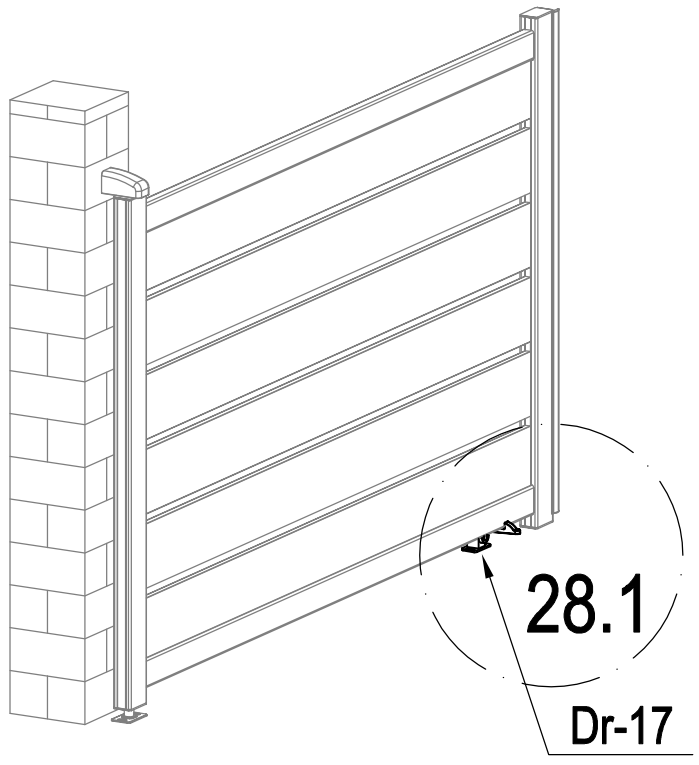

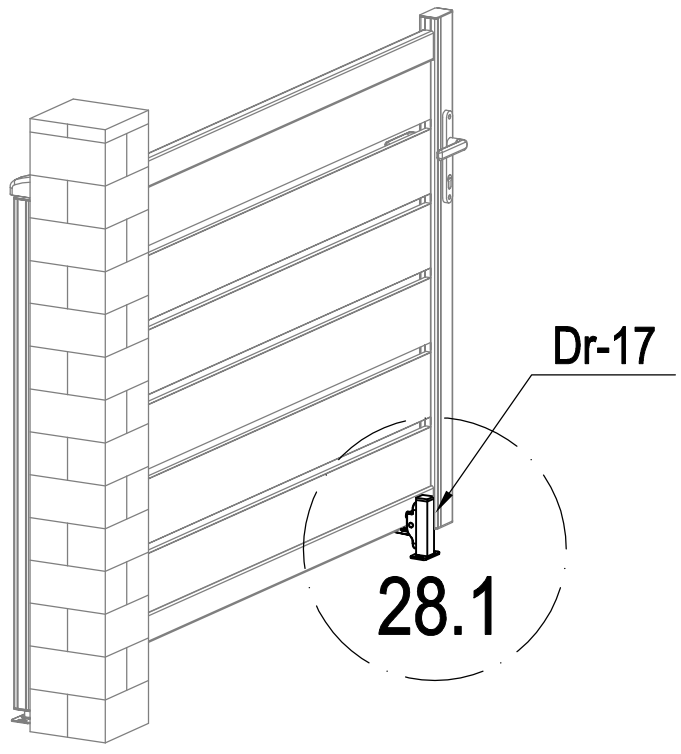

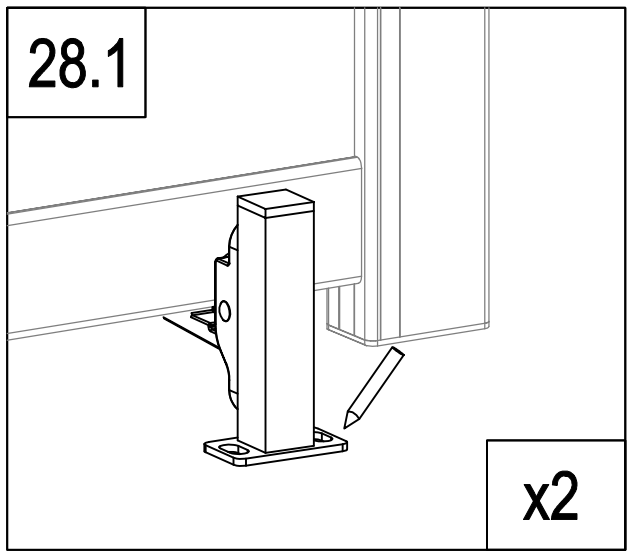

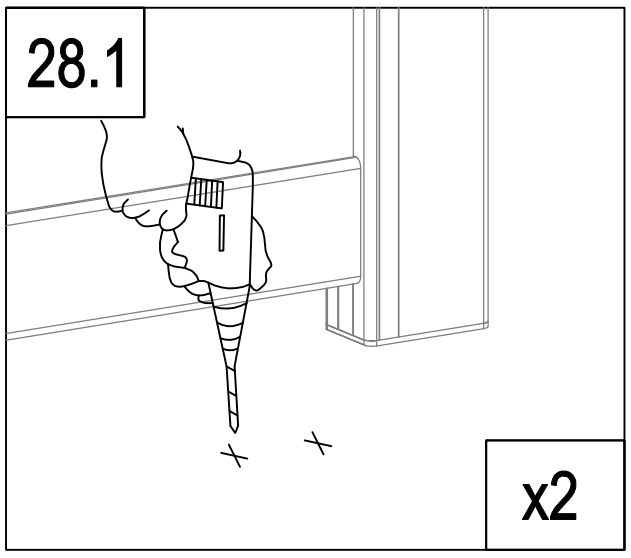

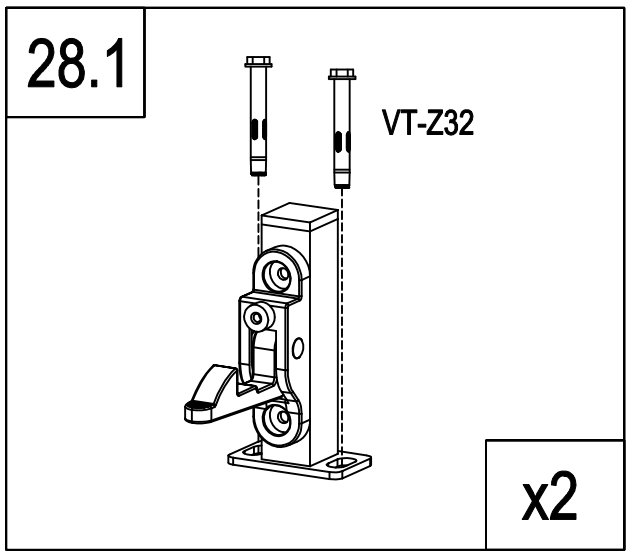

	VT-Z32	4
	Dr-17	2