MONTAGEANLEITUNG
AKKU-RASENMÄHER/MULCHMÄHER



DE
GB
NL
FR
ES
PT
IT
SI
HR
RS
PL
CZ
SK
HU
DK
SE
NO
FI
EE
LT
LV
RO
BG
RU
UA
GR
MK
TR

495505_f

03 | 2026

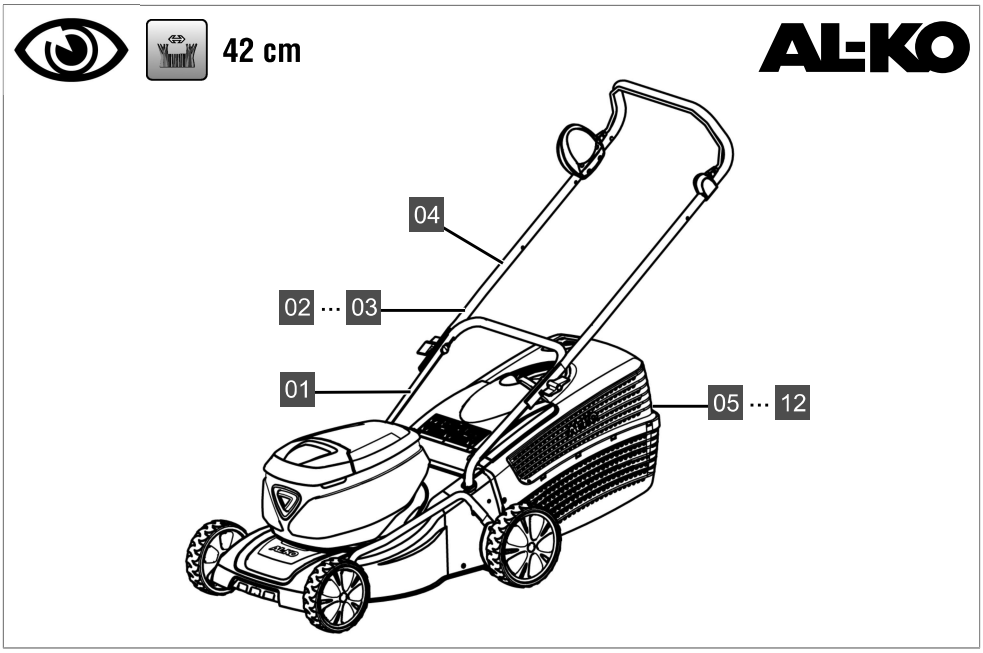
42 cm
AL-KO
04
02 ··· 03
01
05 ··· 12

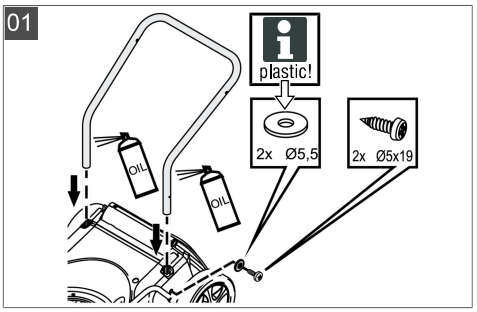
01
plastic!
2x Ø5,5
2x Ø5x19
OIL
OIL

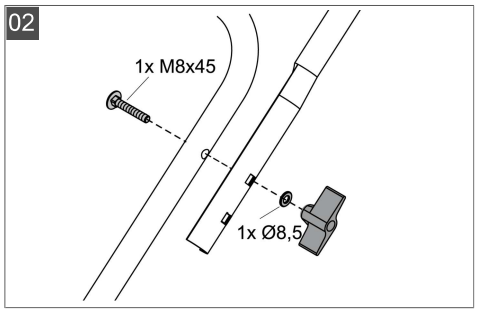
02
1x M8x45
1x Ø8,5

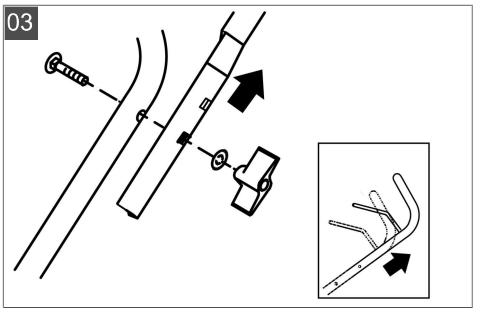
03

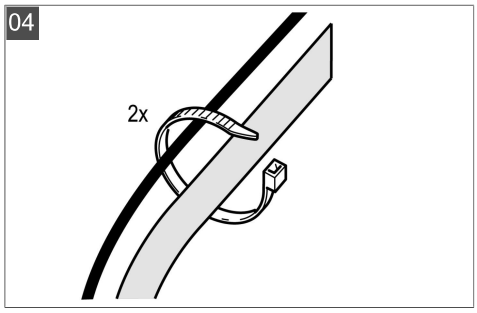
04
2x

05

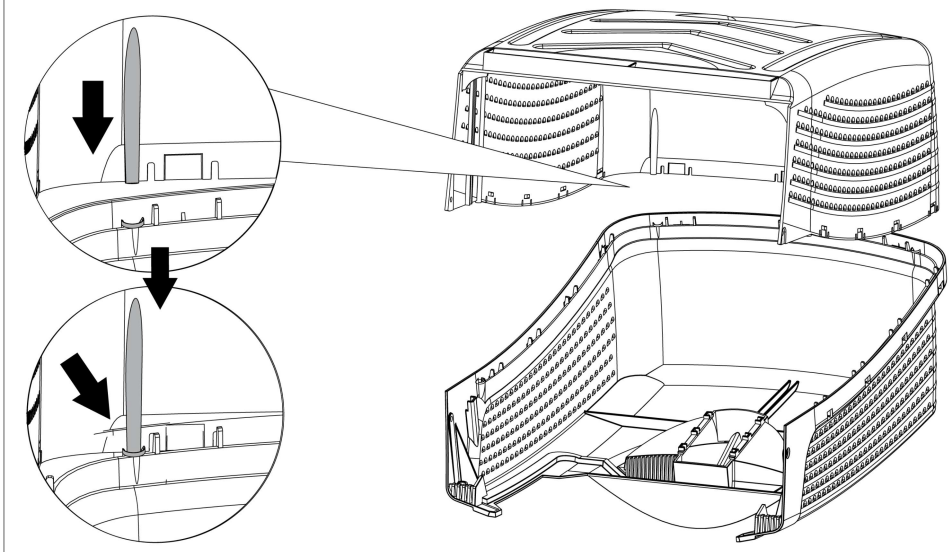

06

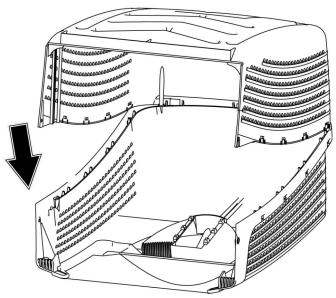

07

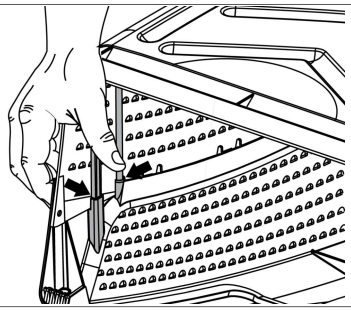

08

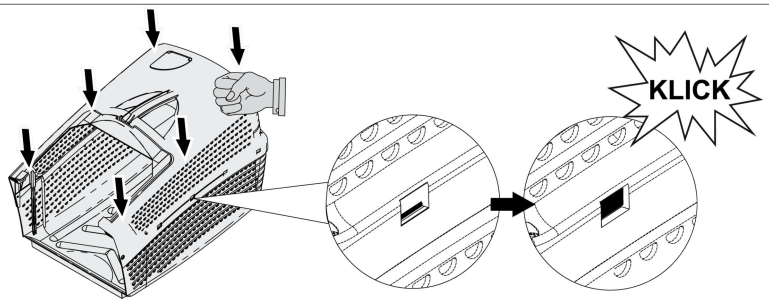

09

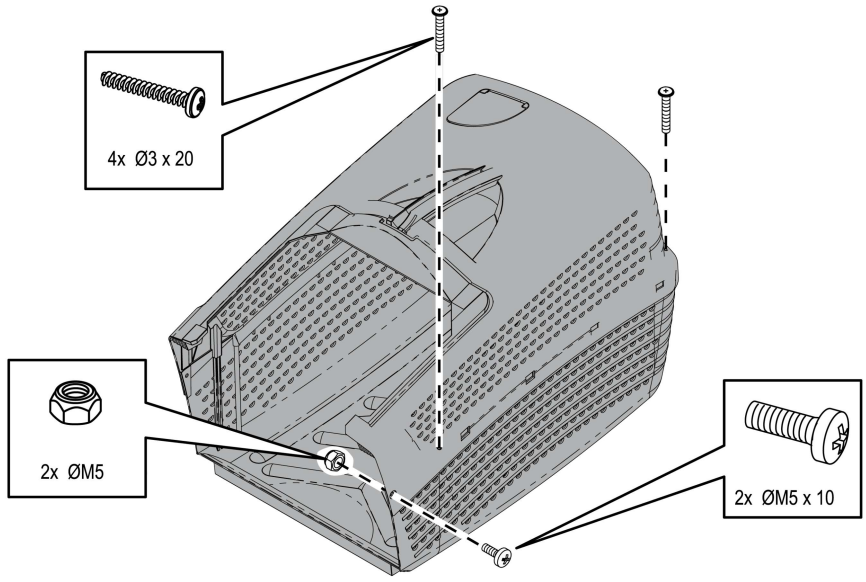

10

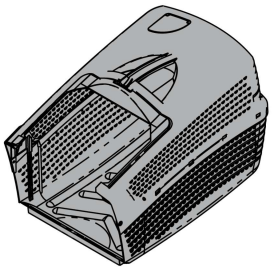

11

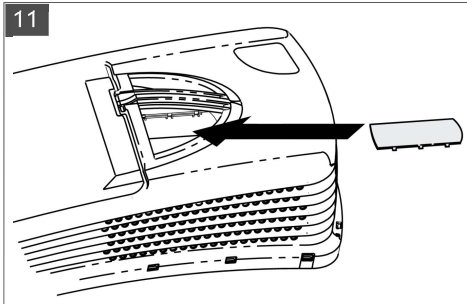

12

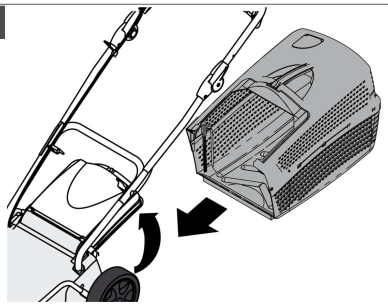

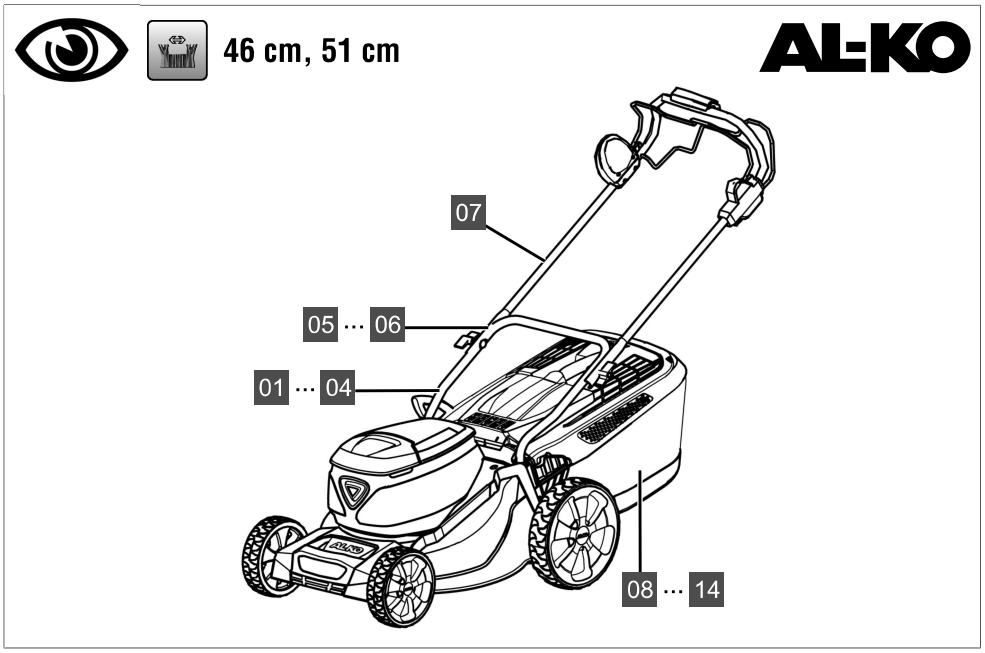
46 cm, 51 cm
AL-KO
07
05 ··· 06
01 ··· 04
08 ··· 14

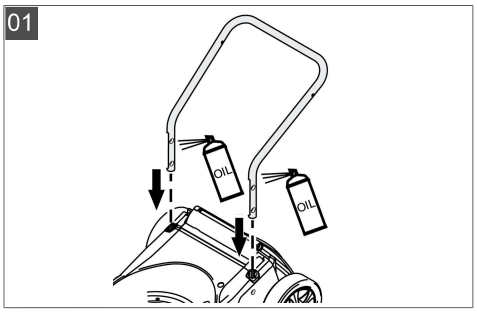
01
OIL
OIL

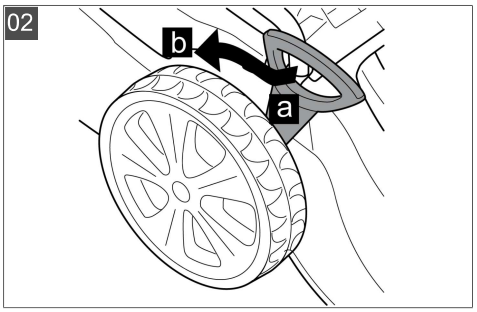
02
b
a

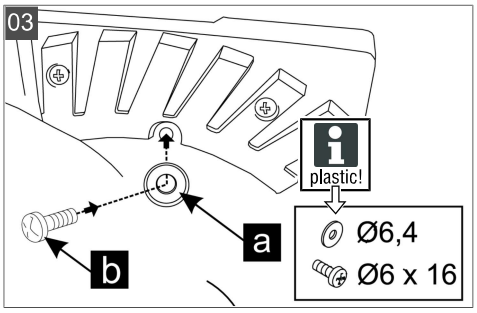
03
plastic!
Ø6,4
Ø6 x 16
a
b

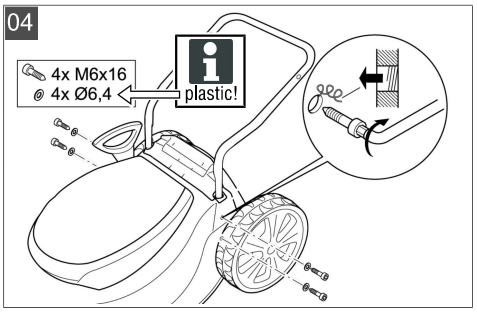
04
4x M6x16
4x Ø6,4
plastic!

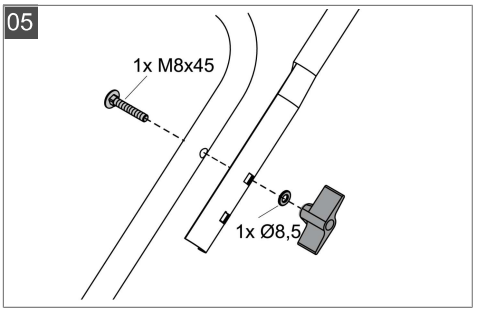
05
1x M8x45
1x Ø8,5

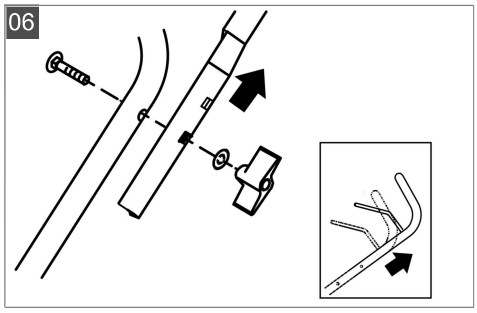
06

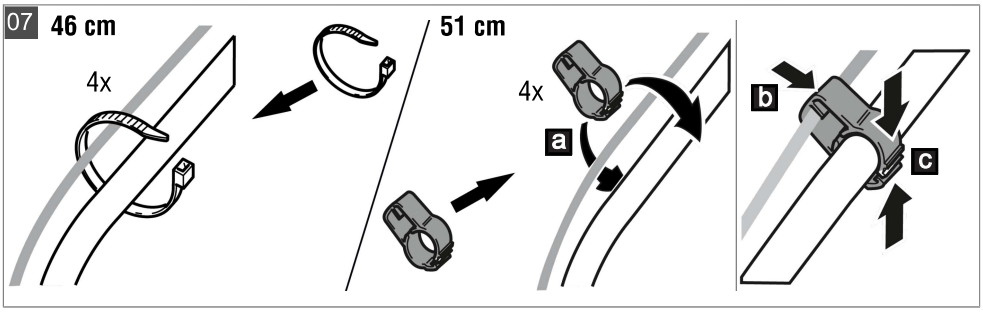
07
46 cm
4x
51 cm
4x
a
b
c

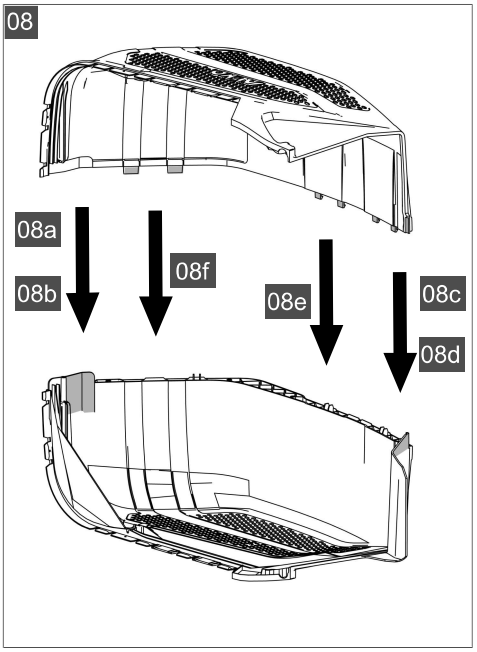
08
08a
08b
08f
08e
08c
08d

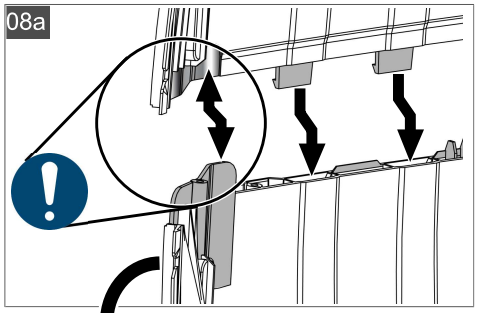
08a

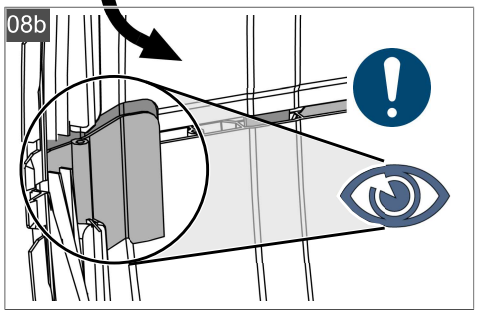
08b

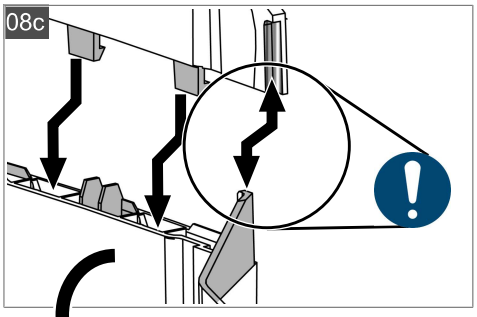
08c

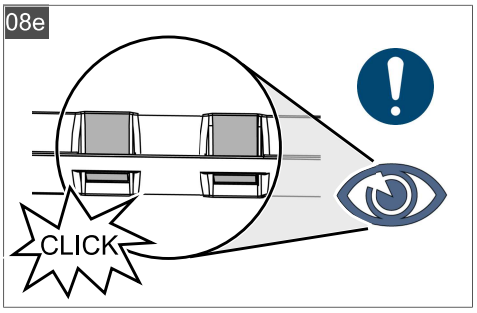
08e
CLICK

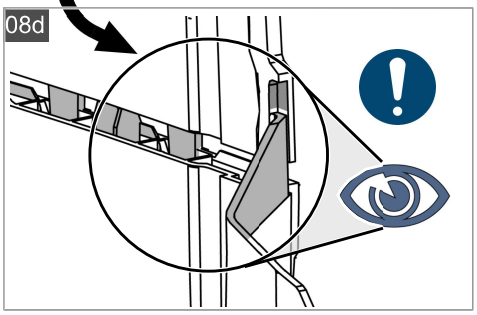
08d

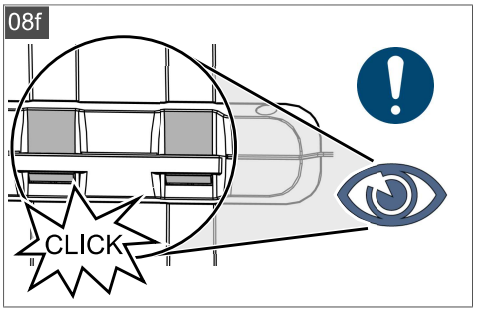
08f
CLICK

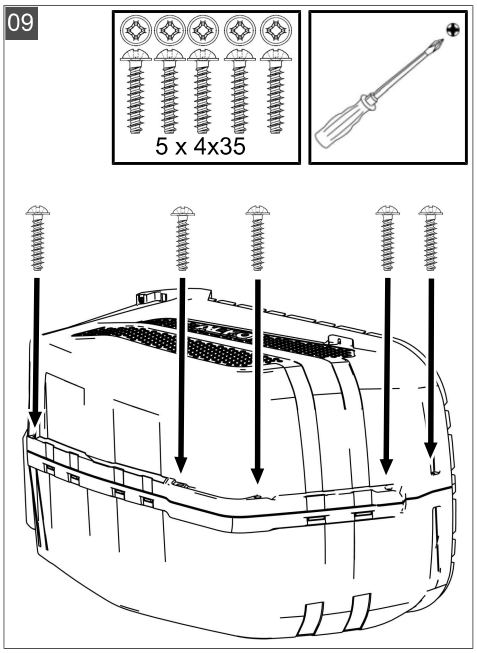
09
5 x 4x35

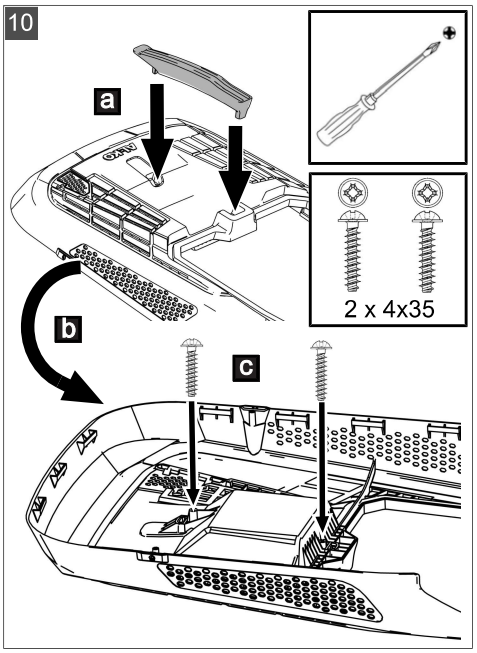
10
a
b
c
2 x 4x35

11

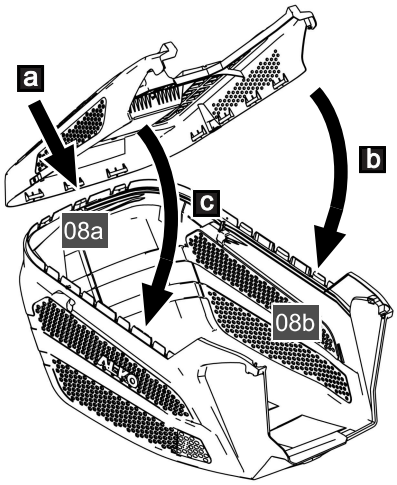

11a

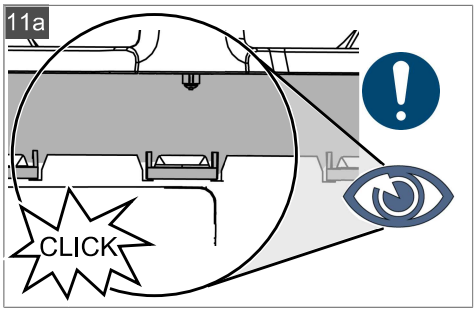

11b

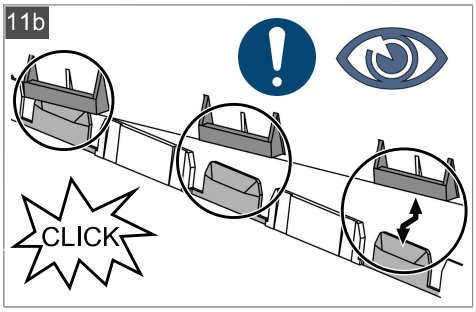

12

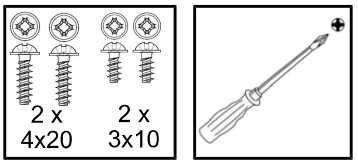

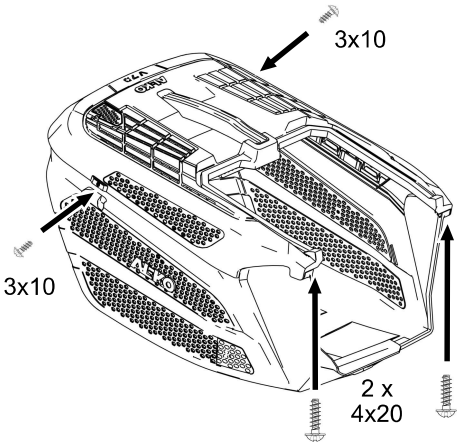

13

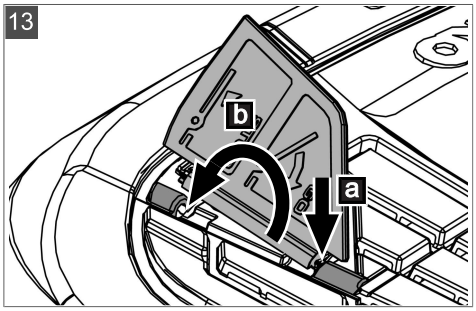

14

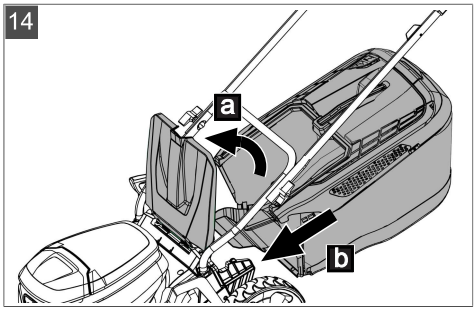

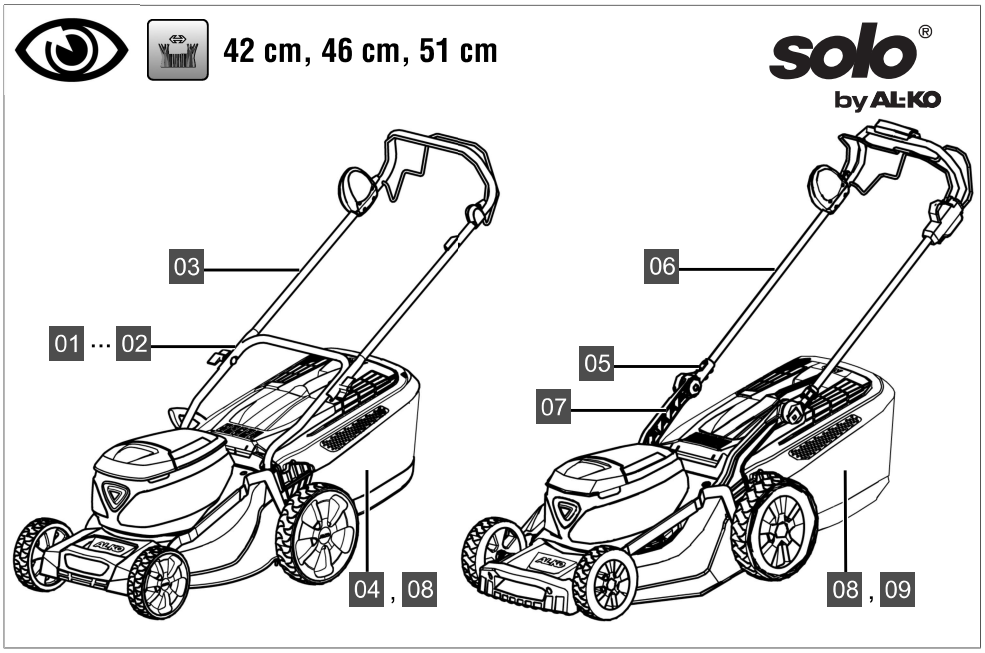
42 cm, 46 cm, 51 cm
solo®
by AL-KO
03
01 ... 02
04 , 08
06
05
07
08 , 09

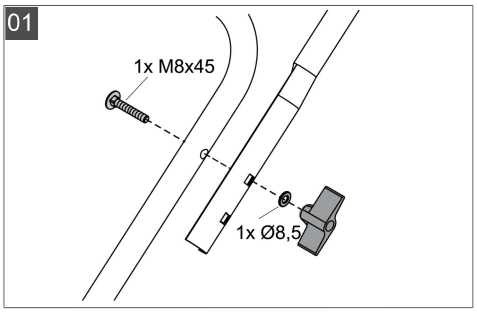
01
1x M8x45
1x Ø8,5

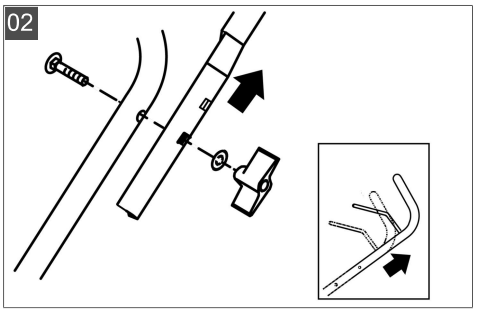
02

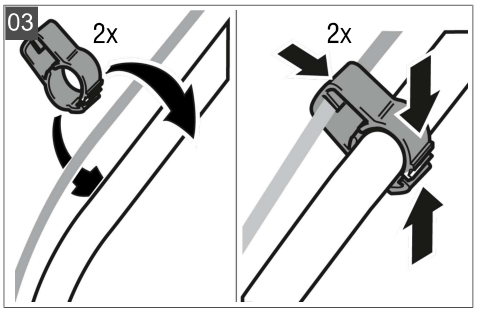
03
2x
2x

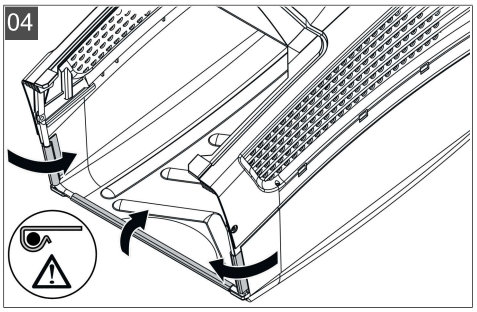
04

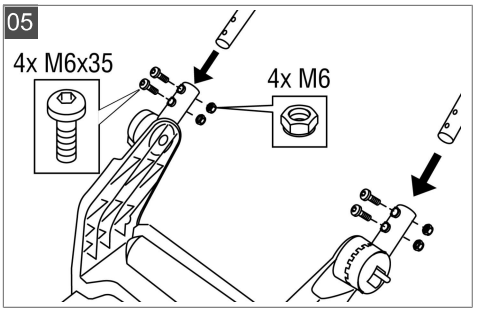
05
4x M6x35
4x M6

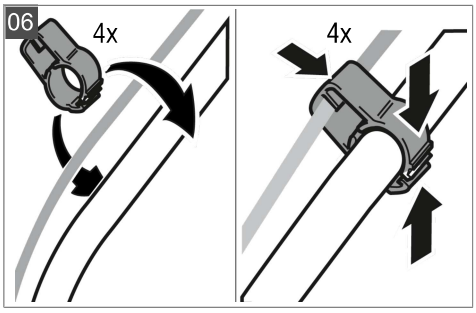
06
4x
4x

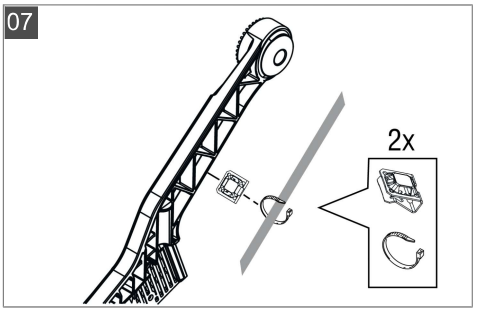
07
2x

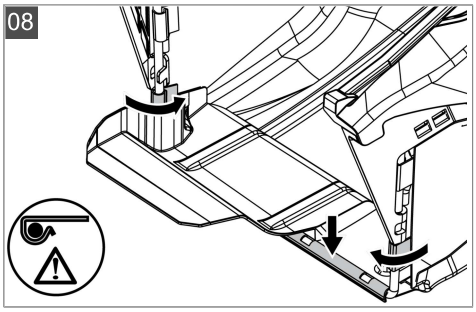
08

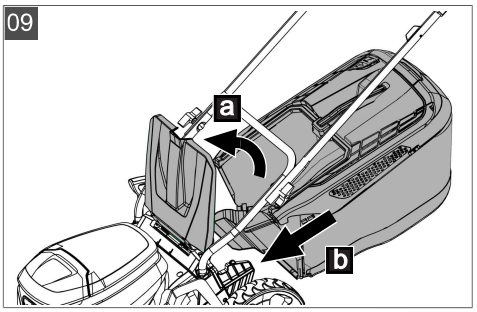
09
a
b

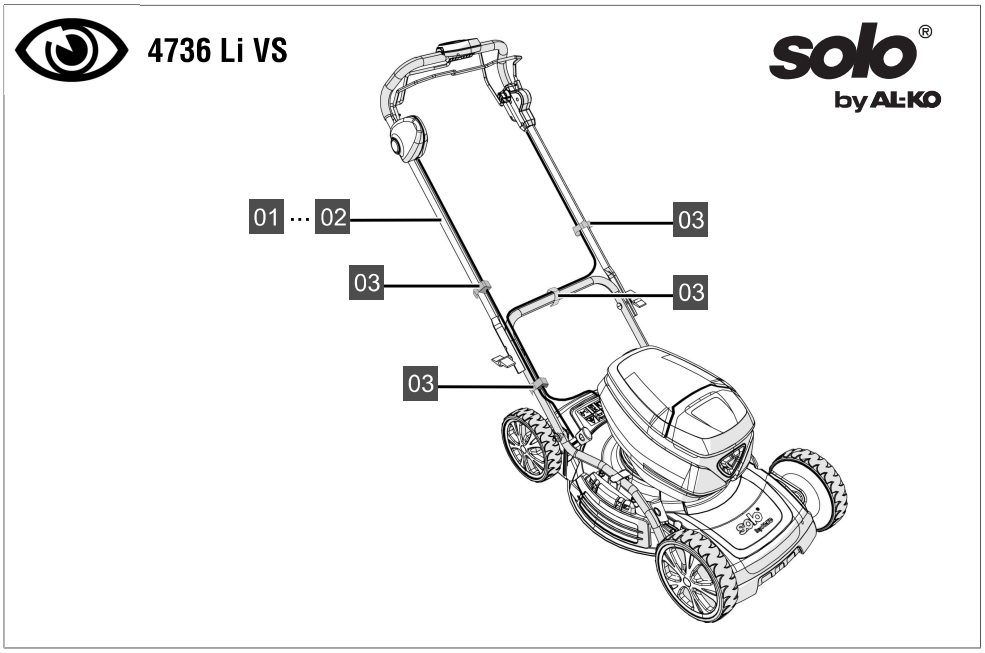
4736 Li VS
solo
by AL-KO
01 ... 02
03
03
03
03

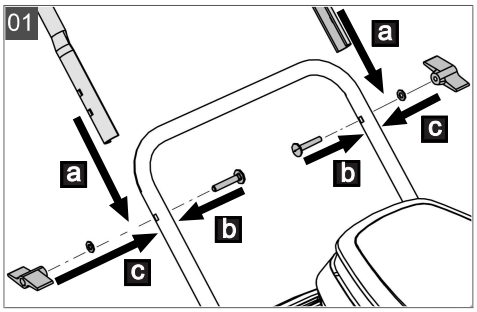
01
a
c
b
a
b
c

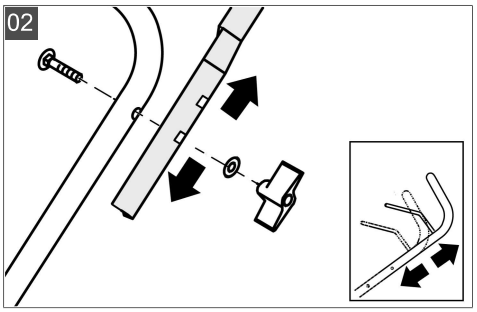
02

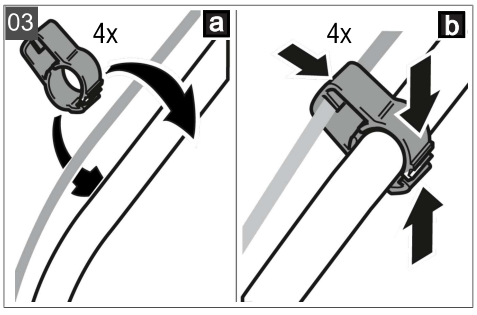
03
4x
a
4x
b

Lawn mower	AL-KO 42.2 Li	AL-KO 46.2 Li SP	AL-KO 46.2 Li SP-W	AL-KO 512 Li VS-W	AL-KO 51.4 Li SP
Working width	**42 cm**	**46 cm**	**46 cm**	**51 cm**	**51 cm**
Order number	119977 | 123009	119978 | 123010	119979 | 123011	119980 | 123110	123086
Rechargeable battery	1x | 2x AL-KO 36V	1x | 2x AL-KO 36V	1x | 2x AL-KO 36V	1x | 2x AL-KO 36V	1x | - AL-KO 36V
Charger	1x | 1x	1x | 1x	1x | 1x	1x | 1x	1x | -
Gross weight of machine without battery	24 kg	29,8 kg	29,8 kg	32 kg	30 kg
Volume of grass box	65 l	70 l	70 l	70 l	70 l
Cutting blade	113347	113348	113348	113979	113979
Range of working heights	2,5 cm – 7,5 cm	3,0 cm – 8,0 cm	3,0 cm – 8,0 cm	3,0 cm – 8,0 cm	3,0 cm – 8,0 cm
Stages of working height	7 stages (central)				
Wheel drive	-	x (fix)	x (fix)	x (variable)	x (fix)
Motor power	900 W	900 W	900 W	1200 W	1200 W

Lawn mower	AL-KO 42.2 Li	AL-KO 46.2 Li SP	AL-KO 46.2 Li SP-W	AL-KO 512 Li VS-W	AL-KO 51.4 Li SP
Motor speed	max. 2900 min^{-1}	max. 2900 min^{-1}	max. 2900 min^{-1}	max. 2900 min^{-1}	max. 2900 min^{-1}
Mulching insert	-	x	x	x	x
Side discharge unit	-	-	-	x	-
Cockpit	-	-	-	x	-
Smart button	-	-	x	x	-
WLAN/WiFi	-	-	20 dBm 2400 MHz - 2483,5 MHz		-
inTOUCH App	-	-	x	x	-
Front handle	-	x	x	x	x
Sound pressure level	L_{pA} = 68,9 dB(A) K = 1,9 dB(A)	L_{pA} = 69,1 dB(A) K = 1,9 dB(A)	L_{pA} = 69,1 dB(A) K = 1,9 dB(A)	L_{pA} = 74,2 dB(A) K = 2,2 dB(A)	L_{pA} = 74,2 dB(A) K = 2,2 dB(A)
Sound power level	L_{WA} 90 dB L_{WA}= 88,9 dB(A), K = 1,9 dB(A)	L_{WA} 90 dB L_{WA}= 89,1 dB(A), K = 1,9 dB(A)	L_{WA} 90 dB L_{WA}= 89,1 dB(A), K = 1,9 dB(A)	L_{WA} 96 dB L_{WA}= 94,2 dB(A), K = 2,2 dB(A)	L_{WA} 96 dB L_{WA}= 94,2 dB(A), K = 2,2 dB(A)

Lawn mower	AL-KO 42.2 Li	AL-KO 46.2 Li SP	AL-KO 46.2 Li SP-W	AL-KO 512 Li VS-W	AL-KO 51.4 Li SP
* Vibration value	a_{hv} <2,5 m/s^2 K = 1,5 m/s^2	a_{hv} <2,5 m/s^2 K = 1,5 m/s^2	a_{hv} <2,5 m/s^2 K = 1,5 m/s^2	a_{hv} <2,5 m/s^2 K = 1,5 m/s^2	a_{hv} <2,5 m/s^2 K = 1,5 m/s^2
Working temperature range	0 °C - +45 °C				
Storage temperature range	-20 °C - +50 °C				
Read instructions	For charger and recharchable batteries:  Separate manuals.				

*x: included, -: not included, *: see technical data chapter in the user manual.*

Lawn mower	solo by AL-KO 4232 Li P	solo by AL-KO 4232 Li SP	solo by AL-KO 4732 Li SP	solo by AL-KO 4735 Li VS	solo by AL-KO 4772 Li VS-W	solo by AL-KO 5272 Li VS-W	solo by AL-KO 4736 Li VS
Working width	**42 cm**	**42 cm**	**46 cm**	**46 cm**	**46 cm**	**51 cm**	**46 cm**
Order number	127597	127661	127598	127798	127599	127600	127723/ 127844
Rechargeable battery / Charger	- (individual delivery)						
Gross weight of machine without battery	24,6 kg	27,7 kg	30,3 kg	30,3 kg	31,8 kg	34,3 kg	30,7 kg

 Lawn mower	solo by AL-KO 4232 Li P	solo by AL-KO 4232 Li SP	solo by AL-KO 4732 Li SP	solo by AL-KO 4735 Li VS	solo by AL-KO 4772 Li VS-W	solo by AL-KO 5272 Li VS-W	solo by AL-KO 4736 Li VS
 Volume of grass box	65 l	65 l	70 l	70 l	70 l	70 l	-
 Cutting blade	113347	113347	113348	113348	113348	113979	119224
 Range of working heights	2,5 cm – 7,5 cm	2,5 cm – 7,5 cm	3,0 cm – 8,0 cm	3,0 cm – 8,0 cm	3,0 cm – 8,0 cm	3,0 cm – 8,0 cm	3,0 cm - 8,5 cm
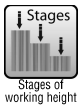 Stages of working height	7 stages (central)						4 stages (front, rear)
 Wheel drive	-	x (fix)	x (fix)	x (variable)	x (variable)		x (variable)
 Motor power	900 W	900 W	900 W	900 W	900 W	1200 W	1200 W
 Motor speed	max. 2900 min^{-1}	max. 2900 min^{-1}	max. 2900 min^{-1}	max. 2900 min^{-1}	max. 2900 min^{-1}	max. 2900 min^{-1}	max. 2900 min^{-1}
 Degree of protection	IPX1						
 Protection class	Protection class III (i.e. extra low voltage)						
 Mulching insert	-	-	x	x	x	x	-
 Side discharge unit	-	-	-	-	x	x	x

Lawn mower	solo by AL-KO 4232 Li P	solo by AL-KO 4232 Li SP	solo by AL-KO 4732 Li SP	solo by AL-KO 4735 Li VS	solo by AL-KO 4772 Li VS-W	solo by AL-KO 5272 Li VS-W	solo by AL-KO 4736 Li VS
 Cockpit	-	-	-	x	x	x	x
 Smart button	-	-	-	-	x	x	-
 WLAN/WiFi	-	-	-	-	20 dBm 2400 MHz - 2483,5 MHz		-
 inTOUCH App	-	-	-	-	x	x	-
 Front handle	-	-	x	x	x	x	x
 Sound pressure level	L_{pA} = 69,0 dB(A) K = 1,8 dB(A)	L_{pA} = 68,4 dB(A) K = 1,8 dB(A)	L_{pA} = 69,1 dB(A) K = 2,2 dB(A)	L_{pA} = 80,0 dB(A) K = 1,0 dB(A)	L_{pA} = 69,1 dB(A) K = 2,2 dB(A)	L_{pA} = 73,5 dB(A) K = 2,1 dB(A)	L_{pA} = 72,9 dB(A) K = 1,9 dB(A)
 Sound power level	 L_{WA}= 89,0 dB(A), K = 1,8 dB(A)	 L_{WA}= 88,4 dB(A), K = 1,8 dB(A)	 L_{WA}= 89,1 dB(A), K = 2,2 dB(A)	 L_{WA}= 91,0 dB(A), K = 1,0 dB(A)	 L_{WA}= 89,1 dB(A), K = 2,2 dB(A)	 L_{WA}= 93,5 dB(A), K = 2,1 dB(A)	 L_{WA}= 92,9 dB(A), K = 1,9 dB(A)
*  Vibration value	a_{hv} <2,5 m/s² K = 1,5 m/s²	a_{hv} <2,5 m/s² K = 1,5 m/s²	a_{hv} <2,5 m/s² K = 1,5 m/s²	a_{hv} <2,5 m/s² K = 1,5 m/s²	a_{hv} <2,5 m/s² K = 1,5 m/s²	a_{hv} <2,5 m/s² K = 1,5 m/s²	a_{hv} <3,0 m/s² K = 1,5 m/s²
 Working temperature range	0 °C - +45 °C						
 Storage temperature range	-20 °C - +50 °C						

 Lawn mower	solo by AL-KO 4232 Li P	solo by AL-KO 4232 Li SP	solo by AL-KO 4732 Li SP	solo by AL-KO 4735 Li VS	solo by AL-KO 4772 Li VS-W	solo by AL-KO 5272 Li VS-W	solo by AL-KO 4736 Li VS
 Read instructions	For charger and recharchable batteries:  Separate manuals.						

*x: included, -: not included, *: see technical data chapter in the user manual.*