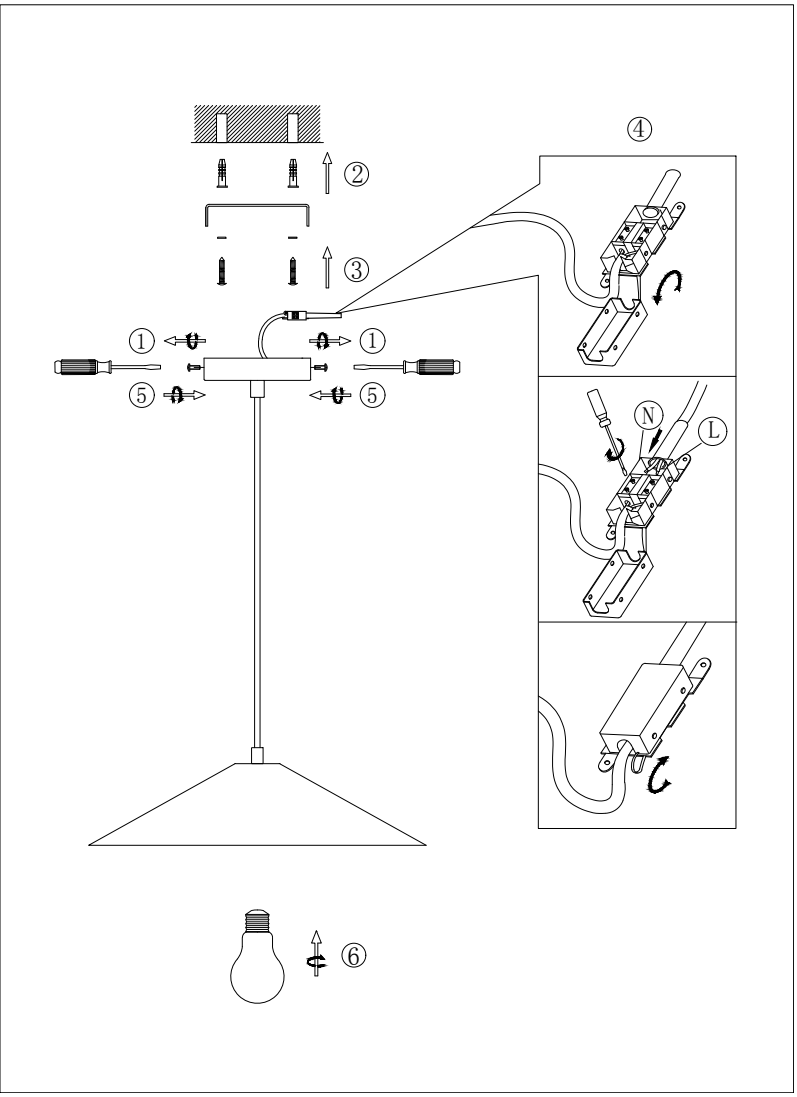
②
③
④
①
①
⑤
⑤
N
L
⑥