CASANOOV

VOGEL 400C180

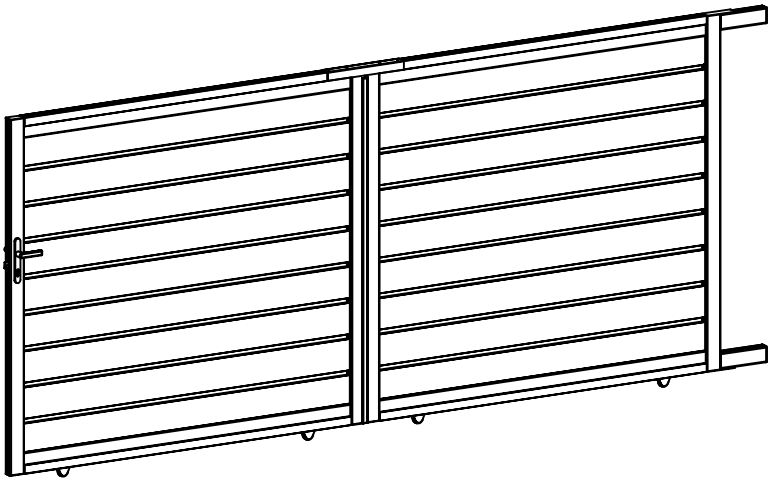

7-8H

x2

COM-000049	[x1]
COM-000050	[x1]
COM-000051	[x1]

FR EN ES DE IT NL PL PT CE

NOTICE DE MONTAGE / INSTRUCTION MANUAL / MANUAL DE MONTAJE / MONTAGEANLEITUNG / MANUALE DI MONTAGGIO / MONTAGEHANDLEIDING / INSTRUKCJA MONTAŻU

Ext.

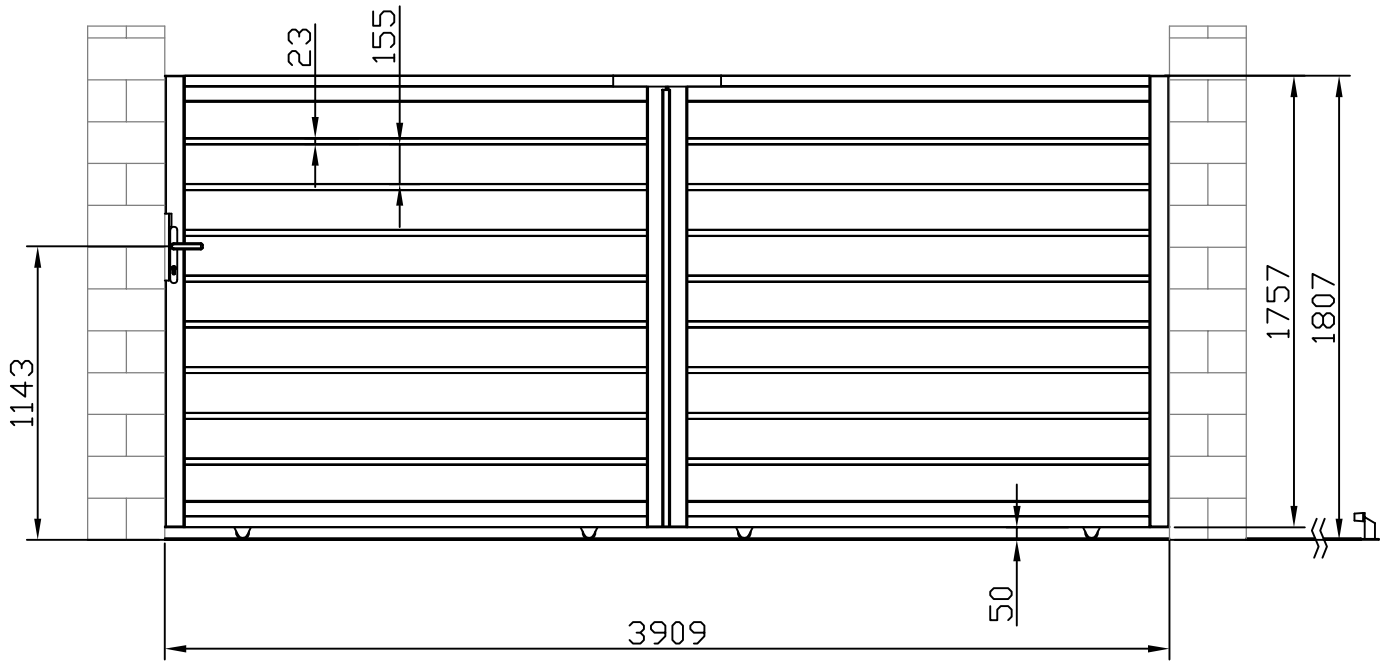

Int.

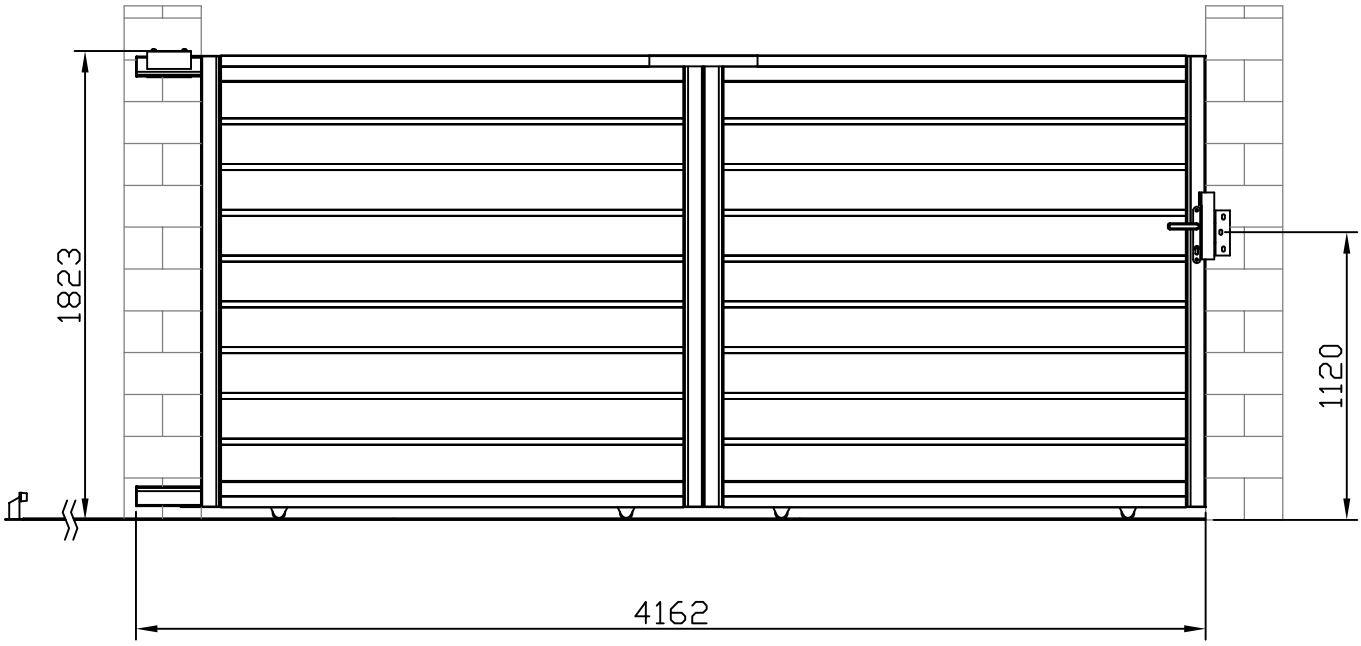

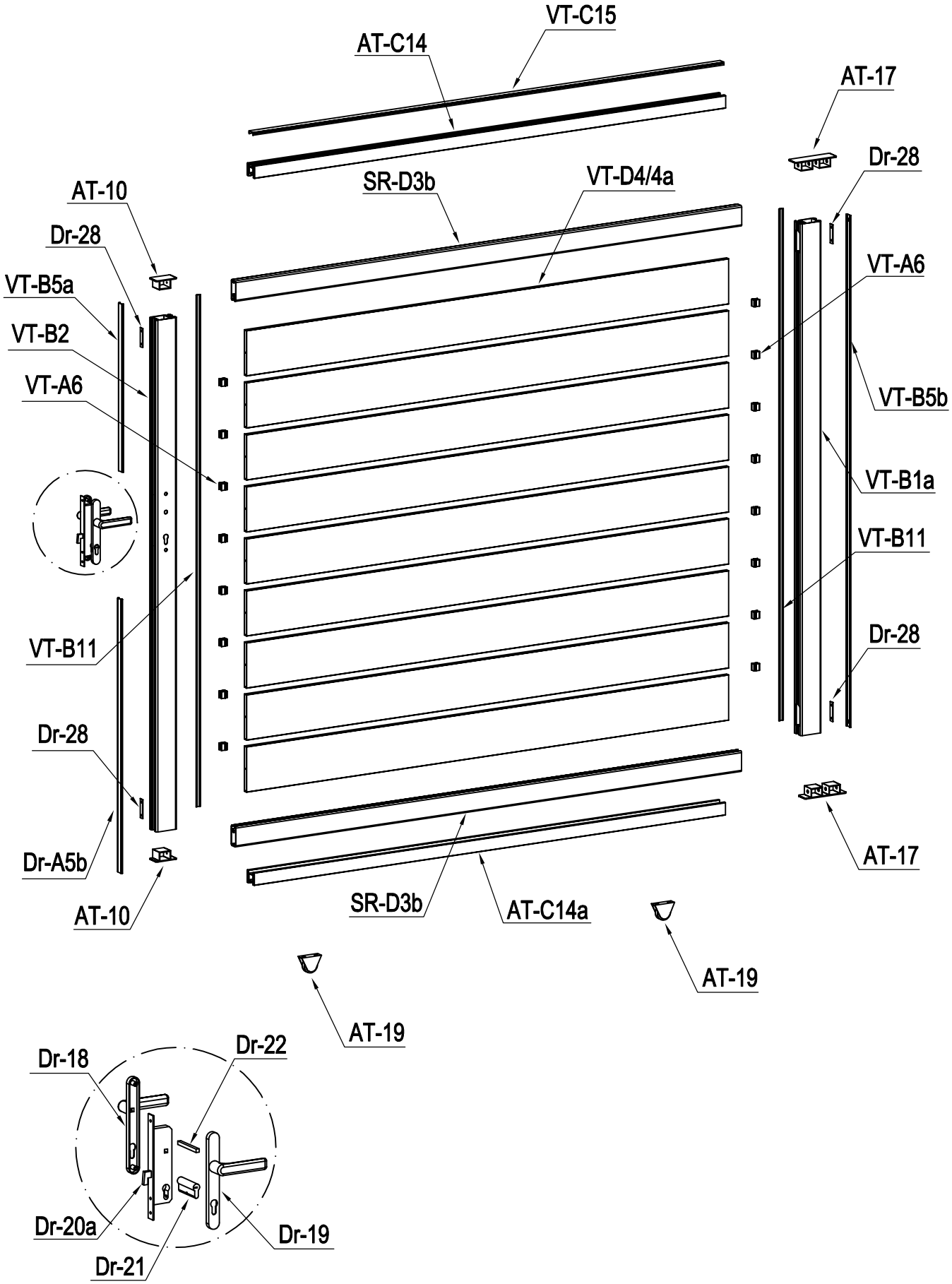
VT-C15
AT-C14
AT-17
Dr-28
SR-D3b
VT-D4/4a
AT-10
Dr-28
VT-B5a
VT-B2
VT-A6
VT-A6
VT-B5b
VT-B1a
VT-B11
VT-B11
Dr-28
Dr-28
Dr-A5b
AT-10
SR-D3b
AT-C14a
AT-17
AT-19
AT-19
Dr-18
Dr-22
Dr-20a
Dr-21
Dr-19

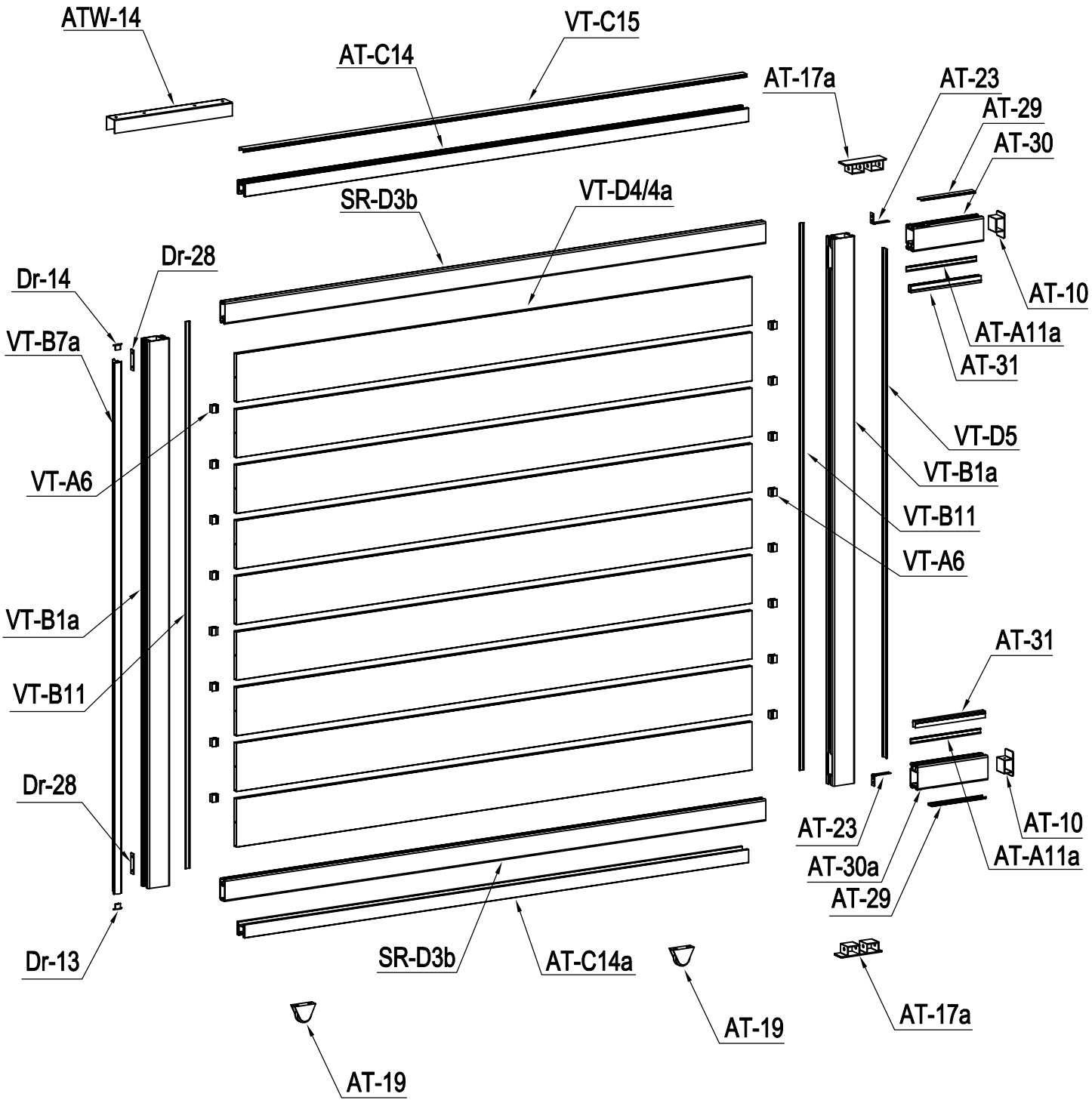
ATW-14
VT-C15
AT-C14
AT-17a
AT-23
AT-29
AT-30
SR-D3b
VT-D4/4a
Dr-28
Dr-14
AT-10
VT-B7a
AT-A11a
AT-31
VT-D5
VT-A6
VT-B1a
VT-B11
VT-A6
VT-B1a
AT-31
VT-B11
Dr-28
AT-23
AT-10
AT-30a
AT-A11a
AT-29
Dr-13
SR-D3b
AT-C14a
AT-19
AT-17a
AT-19

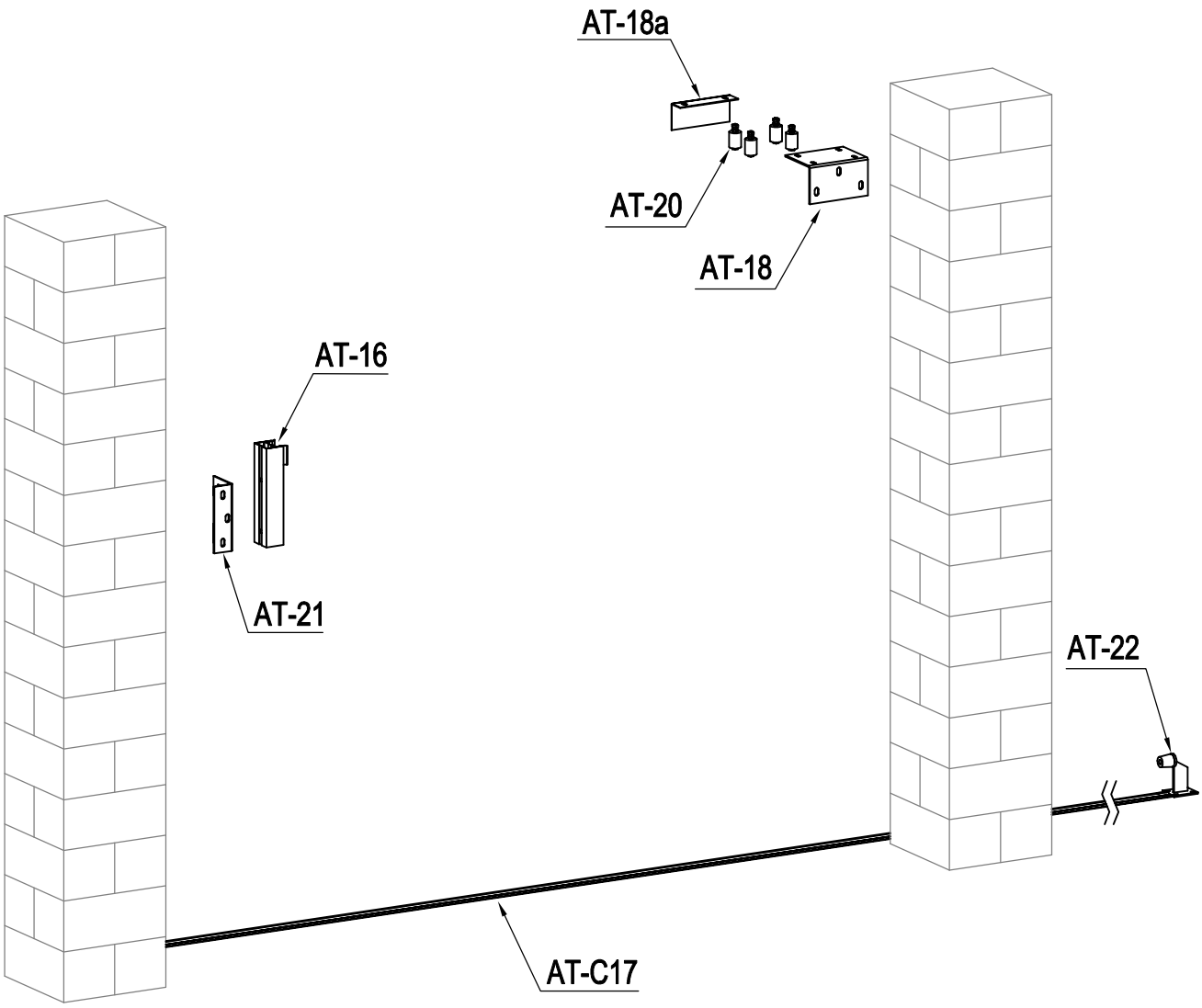
AT-18a
AT-20
AT-18
AT-16
AT-21
AT-22
AT-C17

PART LIST

IMAGE	NO.	L.(mm)	QTY
	VT-B1a	1751	3
	VT-B2	1751	1
	AT-30	250	1
	AT-30a	250	1
	SR-D3b	1931	4
	VT-D4	1840	16
	VT-D4a	1840	2
	VT-D5	1626	1
	VT-B5a	573.5	1
	Dr-A5b	937	1
	VT-B5b	1751	1
	AT-29	193	2
	VT-B11	1751	4
	AT-A11a	250	2
	VT-A6	23	32
	AT-31	250	2
	VT-B7a	1698	1
	AT-C14	1798	2
	AT-C14a	1798	2
	VT-C15	1797	2
	AT-16	260	1
	AT-C17	1580	5
	AT-17		2
	AT-17a		2
	AT-10		4
	Dr-13		1
	Dr-14		1

IMAGE	NO.	L.(mm)	QTY
	AT-18		1
	AT-18a		1
	AT-19		4
	AT-20		4
	AT-21		1
	AT-22		1
	AT-23		2
	Dr-18		1
	Dr-19		1
	Dr-20a		1
	Dr-21		1
	Dr-22		1
	Dr-25		1
	Dr-25a		2
	Dr-27		2
	VT-W30		4
	VT-W31		10
	VT-W32		32
	VT-W33		4
	VT-W34		76
	VT-W35		6
	VT-W36		2
	VT-W37		8
	VT-W38		50
	Dr-28		6
	AT-22J		7
	ATW-14		1

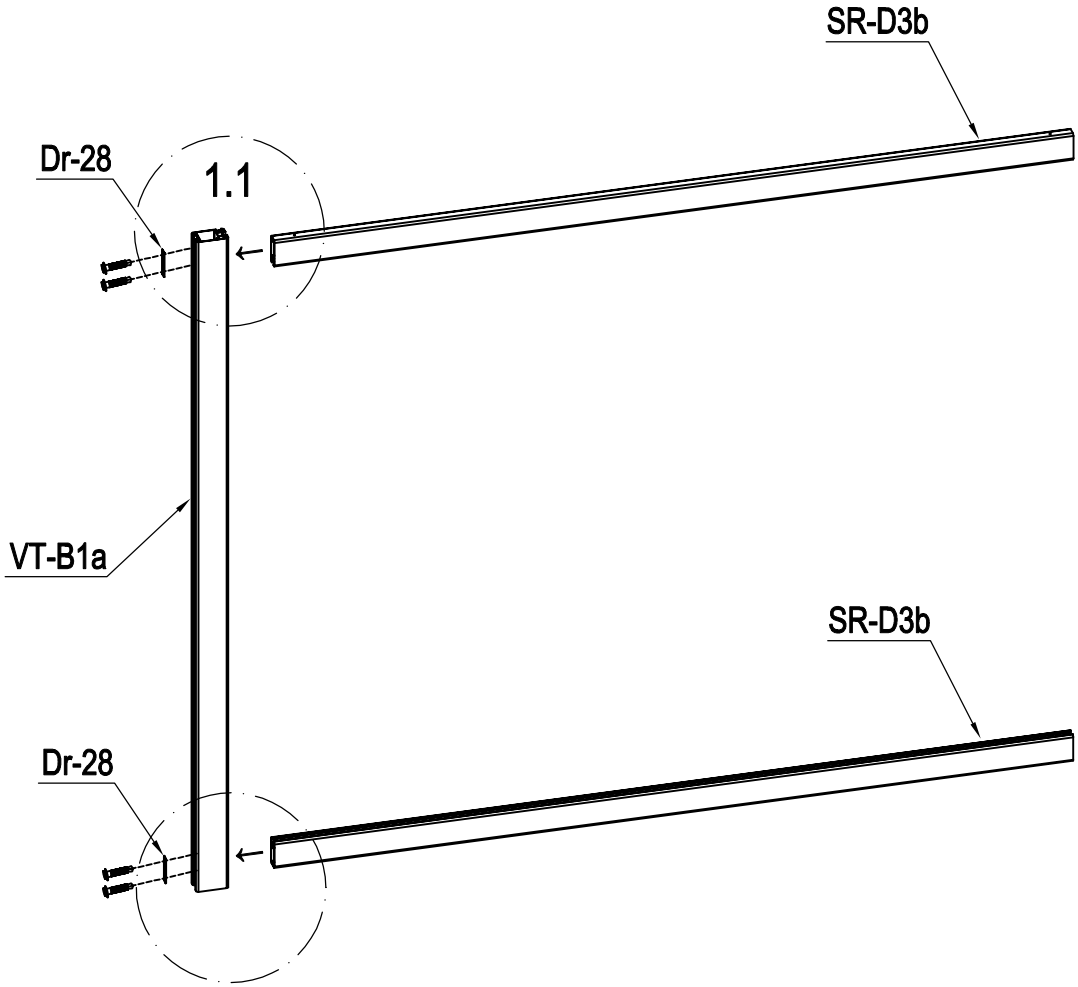

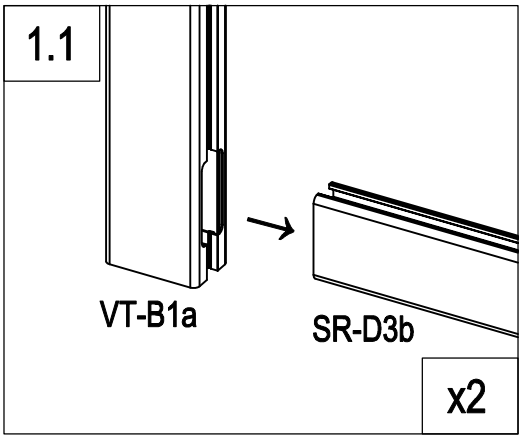

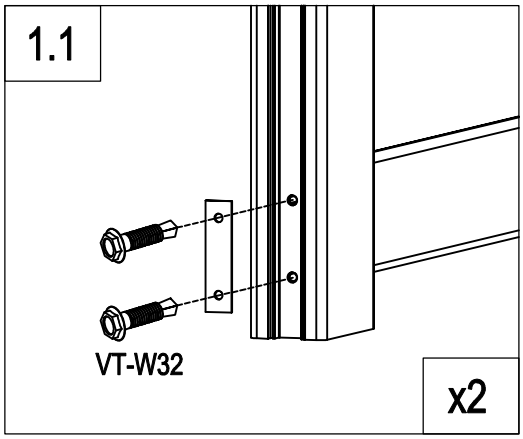

	VT-B1a	1
	SR-D3b	2
	Dr-28	2
	VT-W32	4

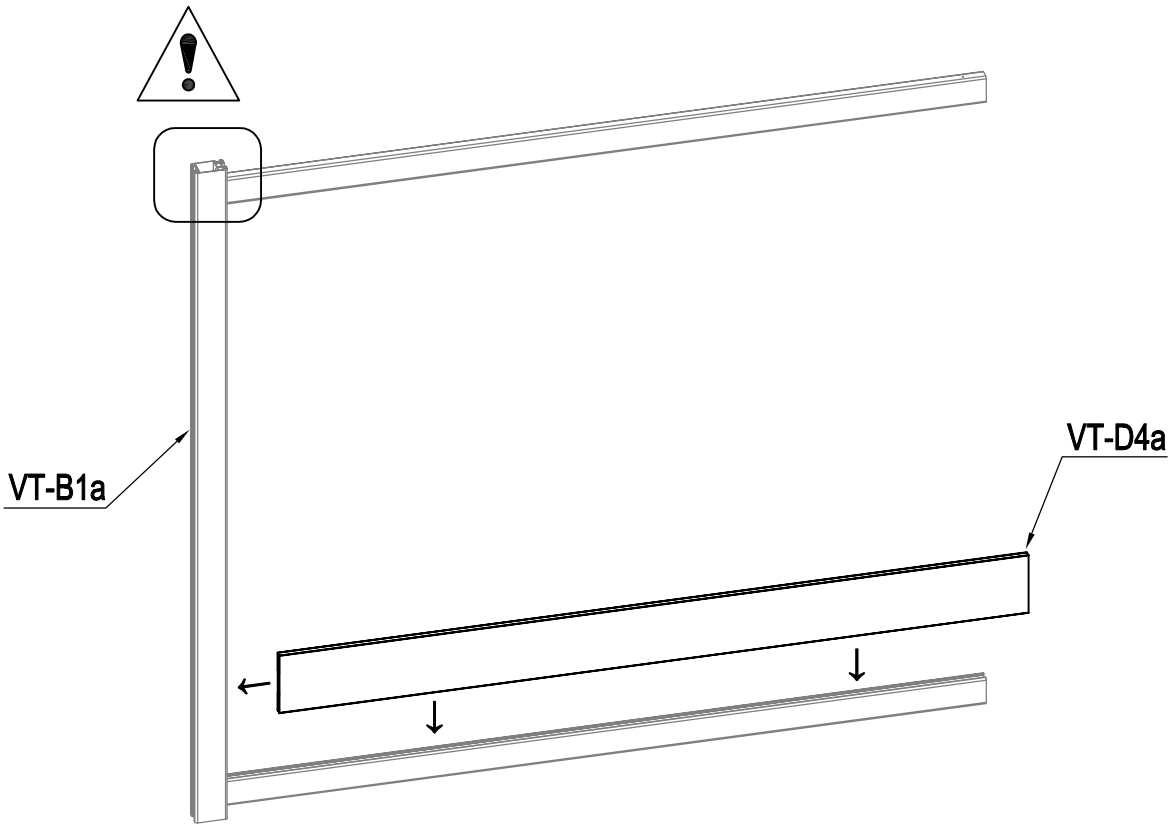

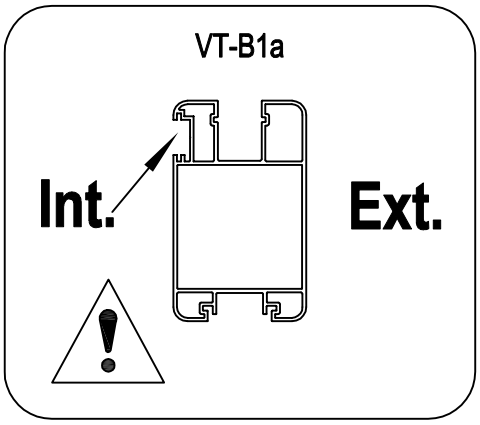

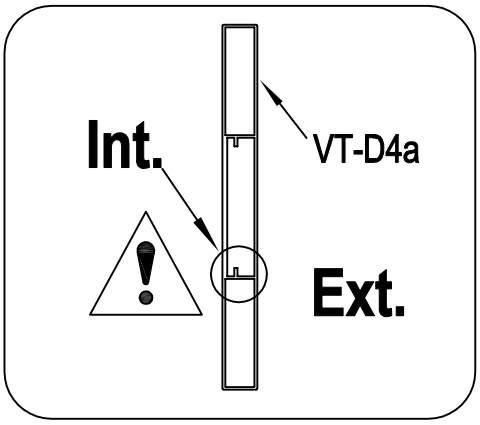

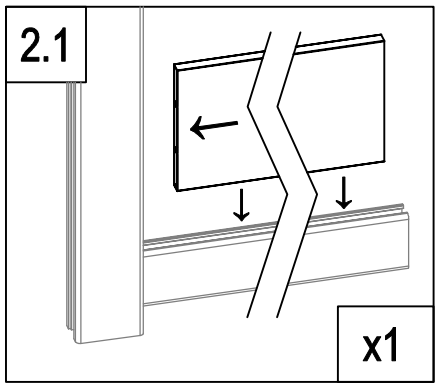

	VT-D4a	1

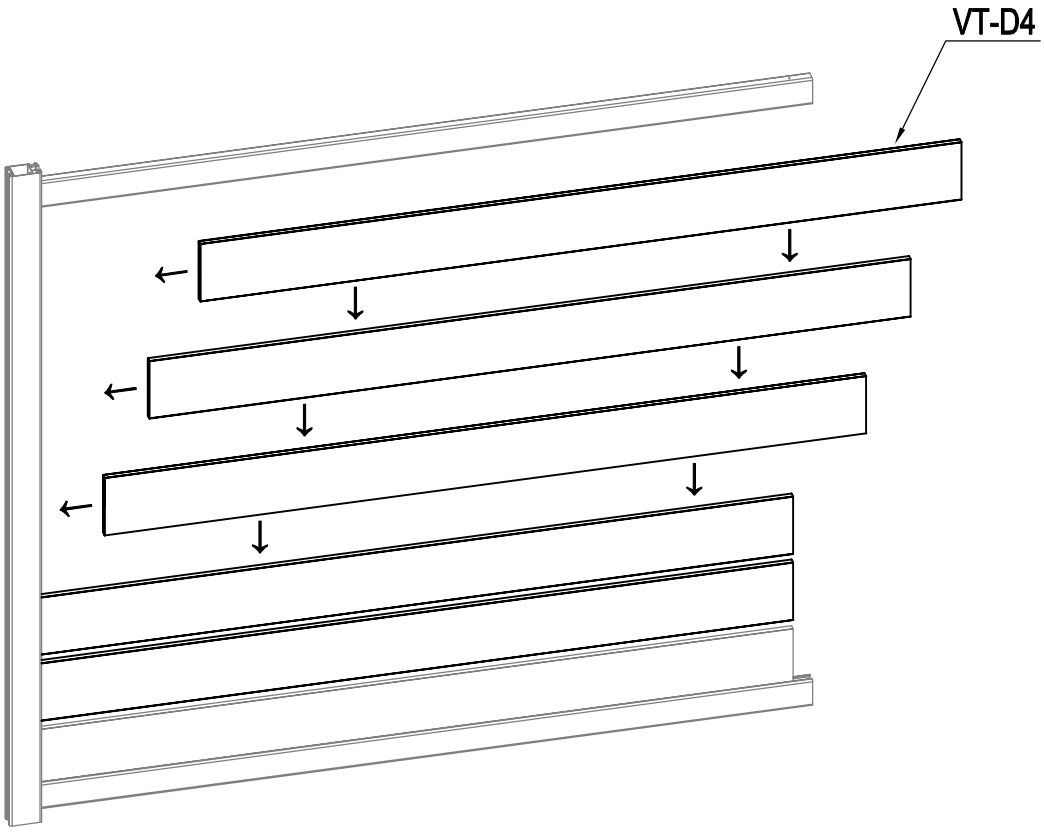

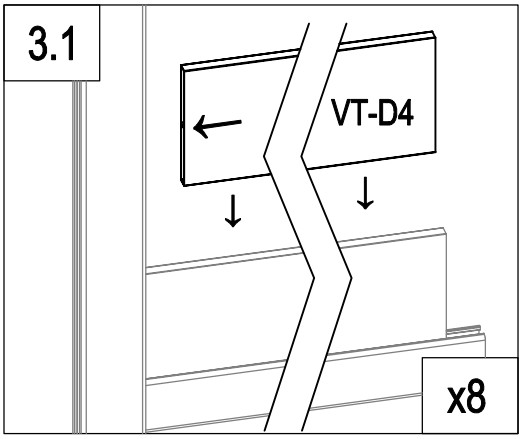

	VT-D4	8

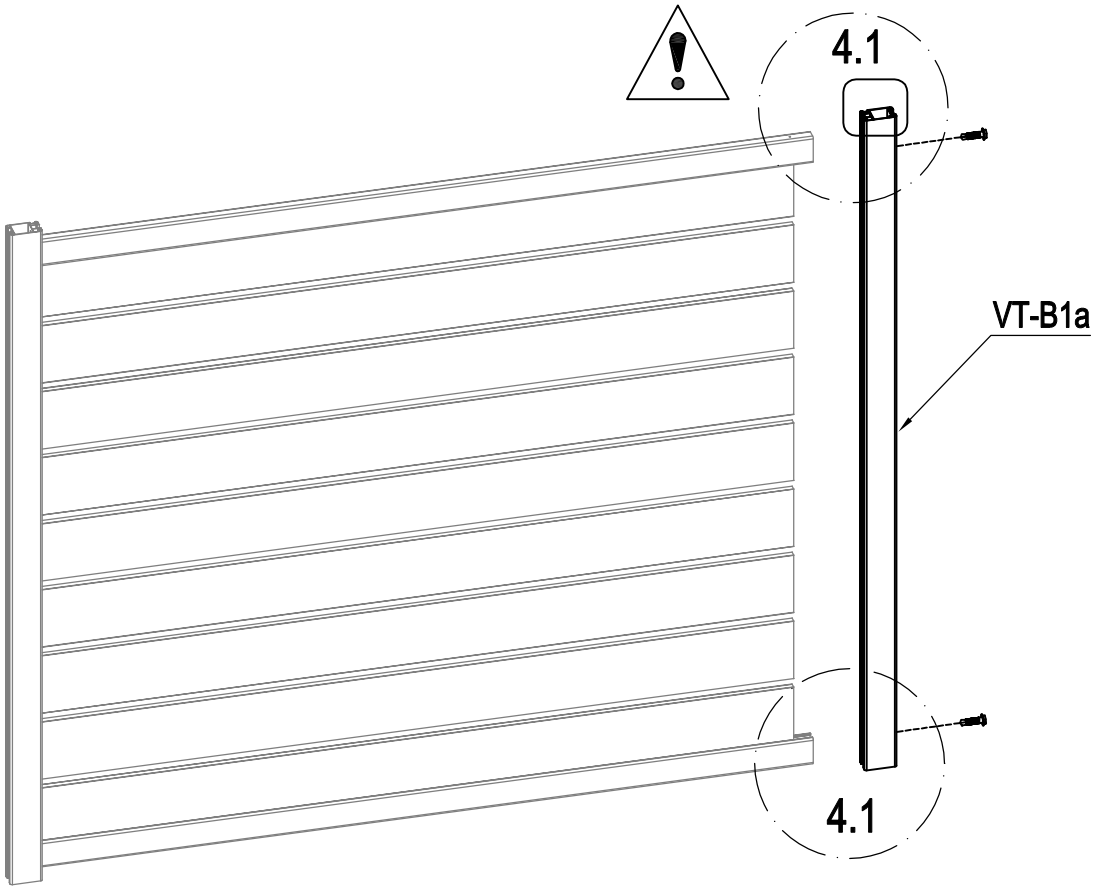

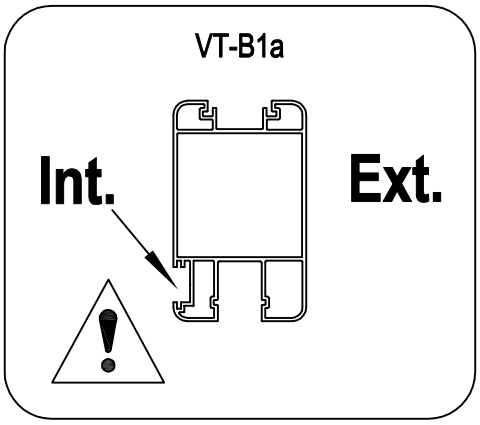

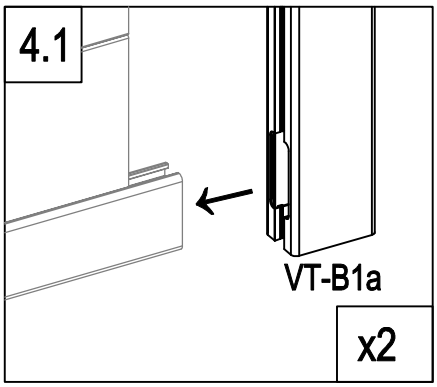

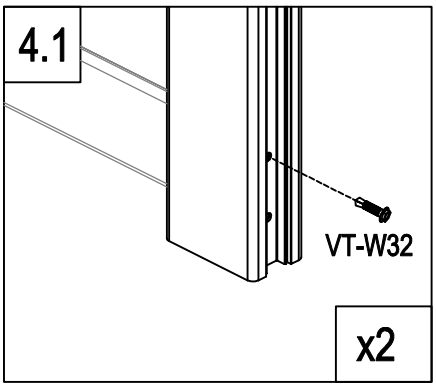

	VT-B1a	1
	VT-W32	2

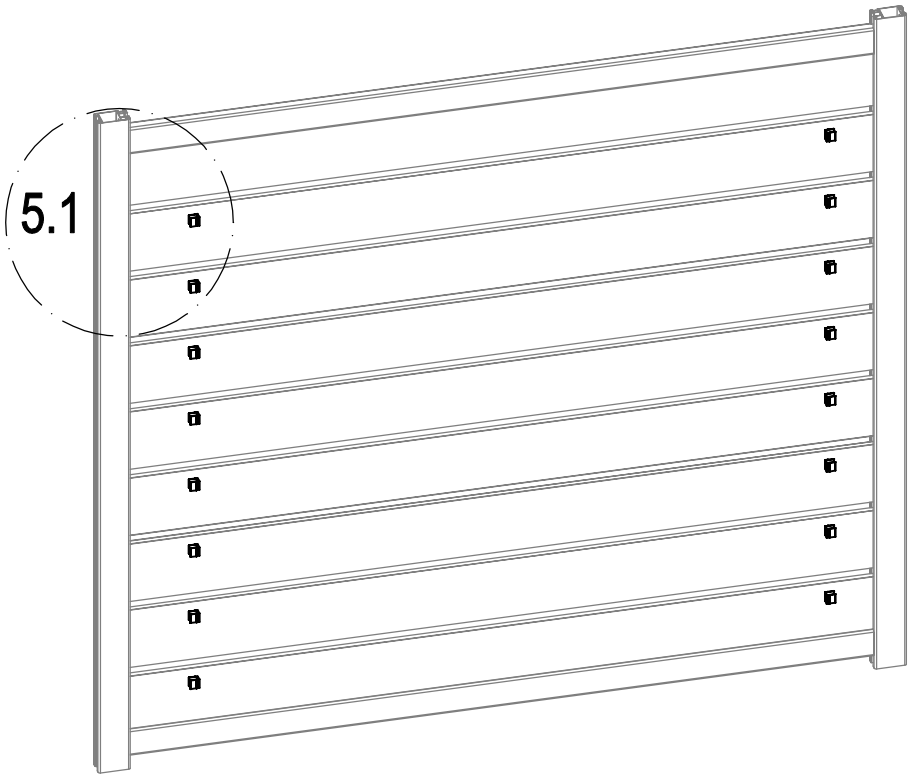

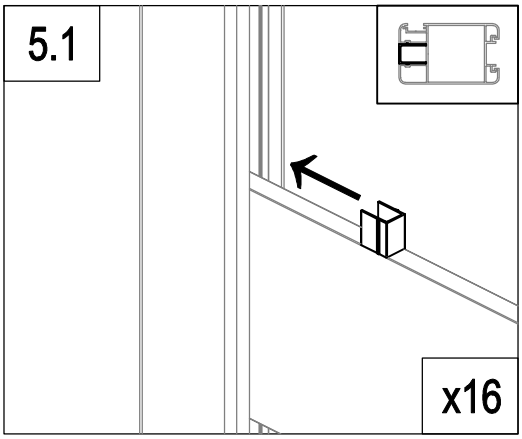

	VT-A6	16

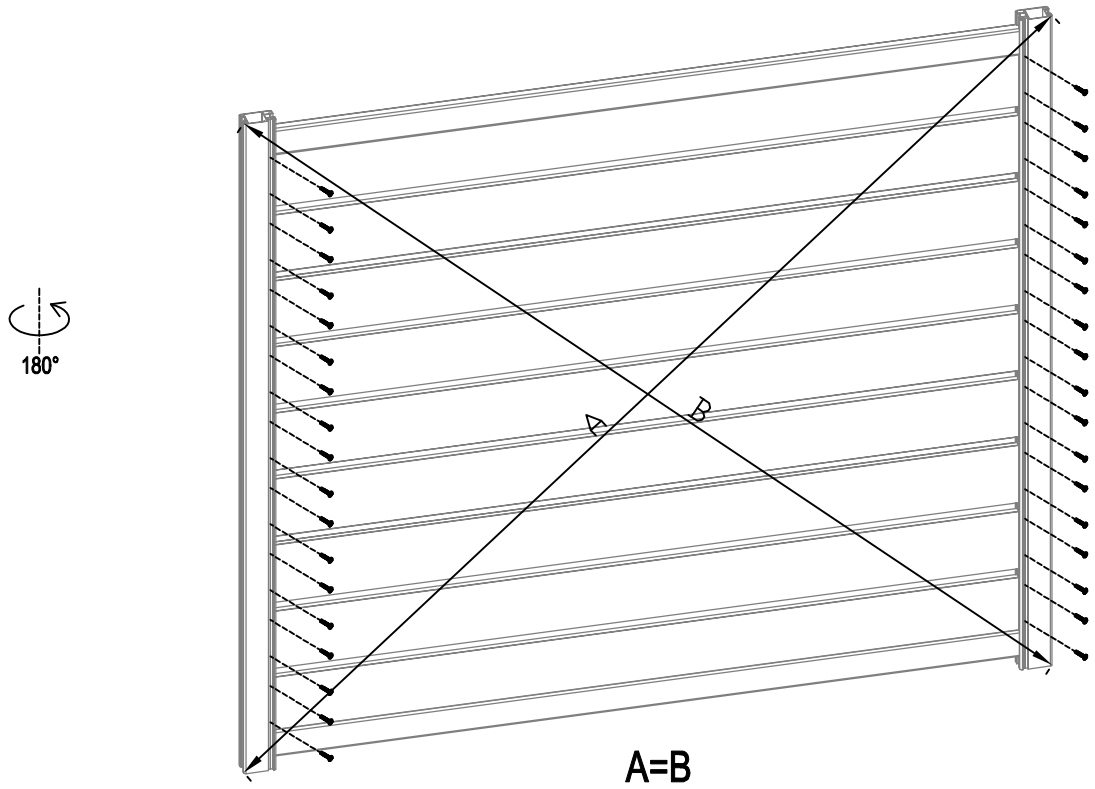

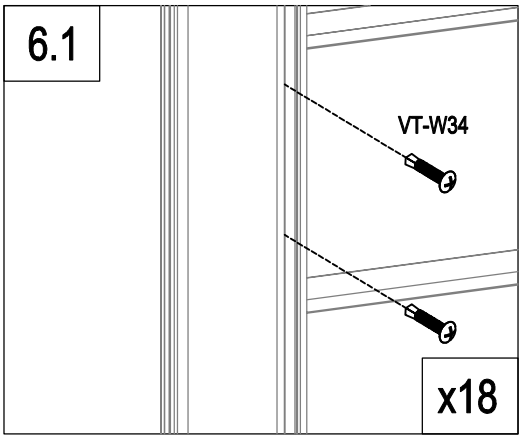

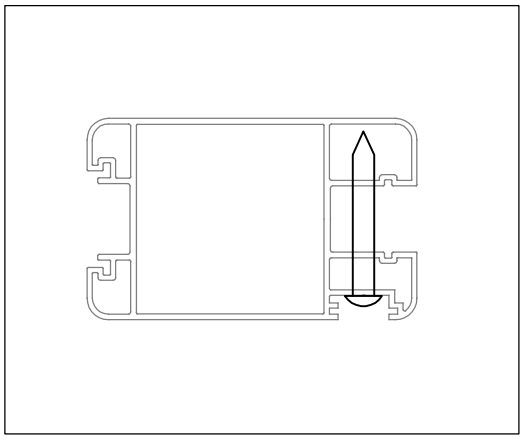

	VT-W34	36

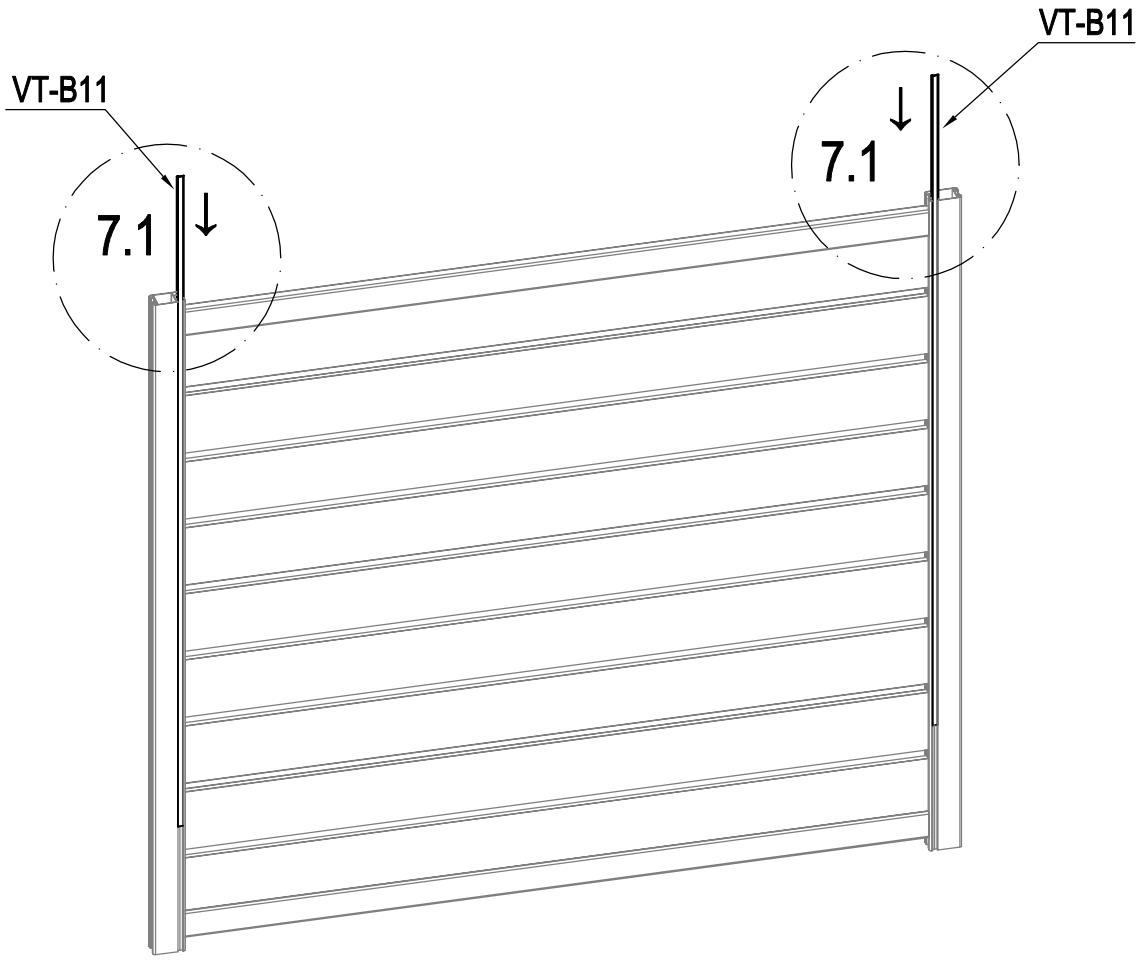

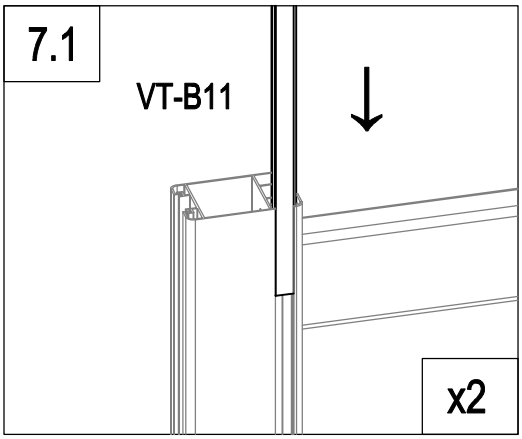

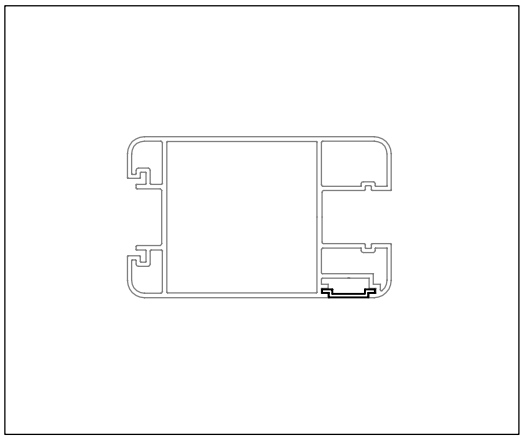

	VT-B11	2

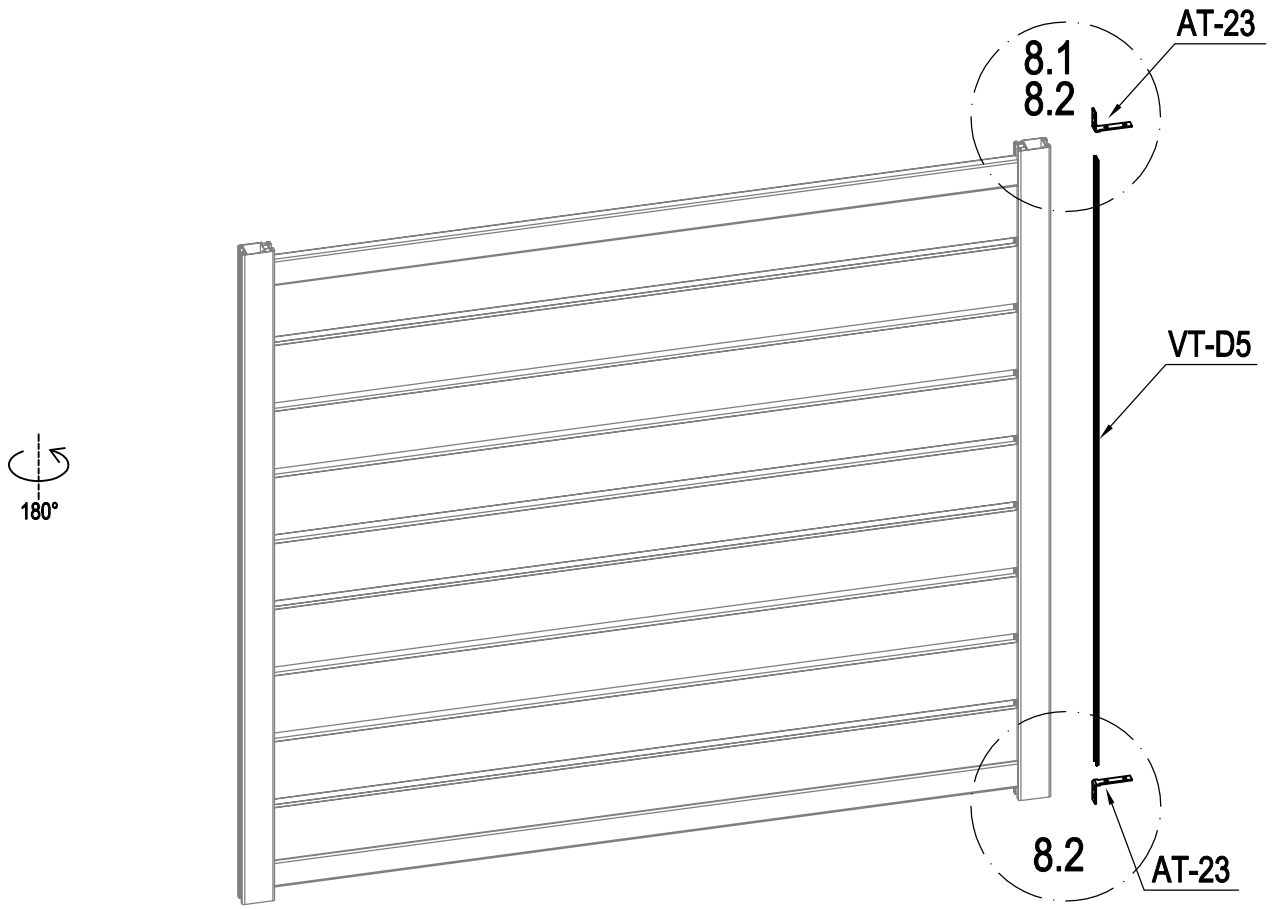

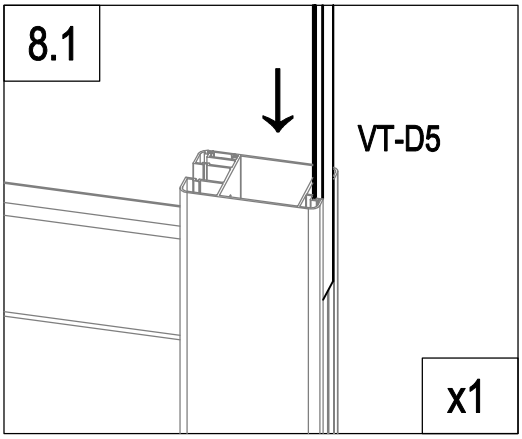

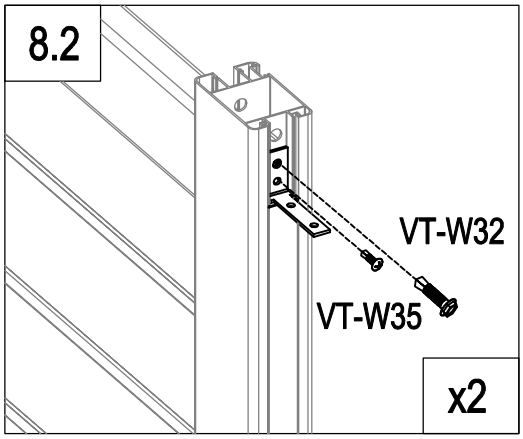

	VT-D5	1
	AT-23	2
	VT-W32	2
	VT-W35	2

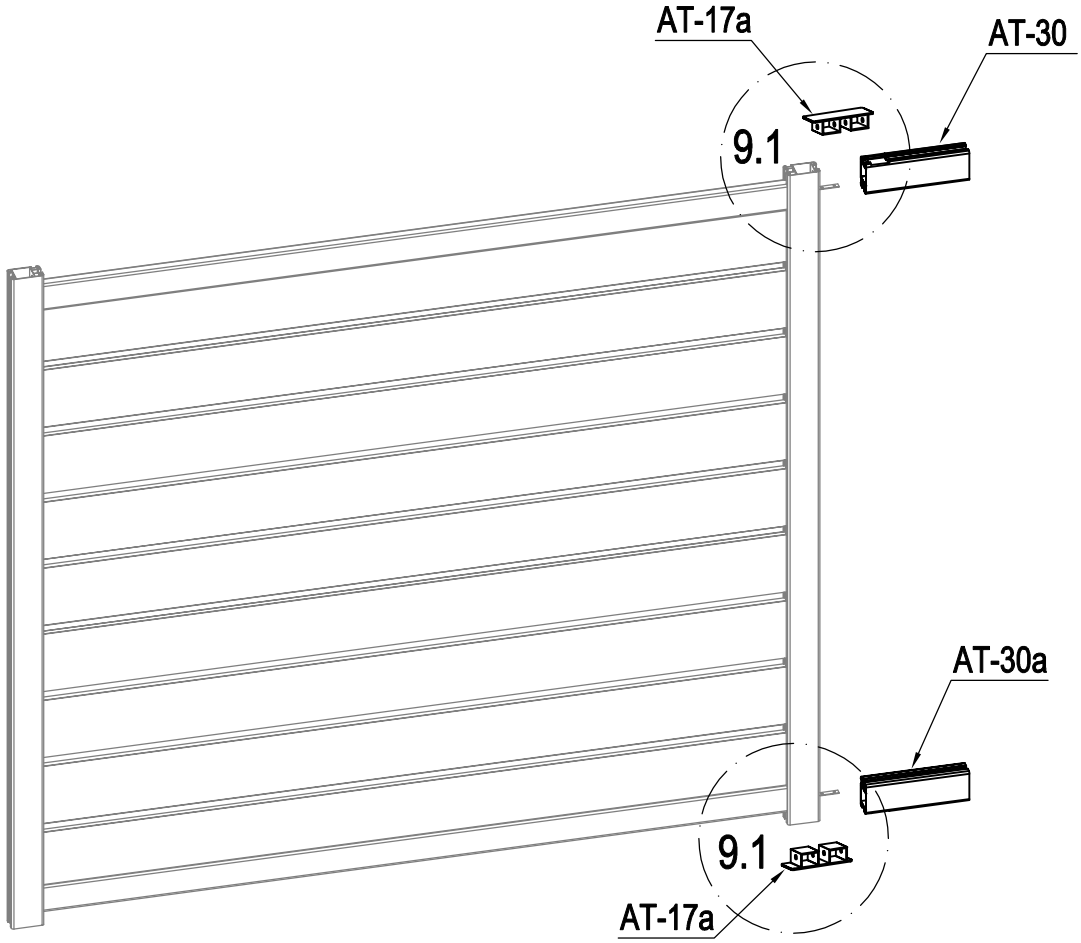

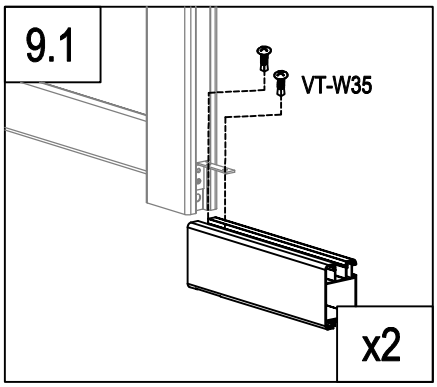

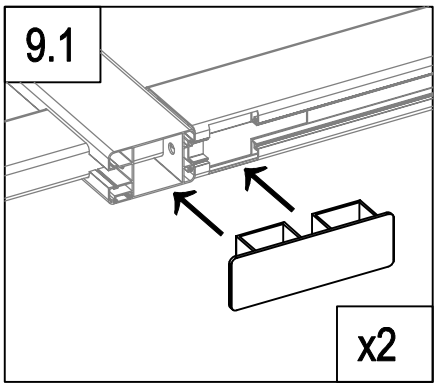

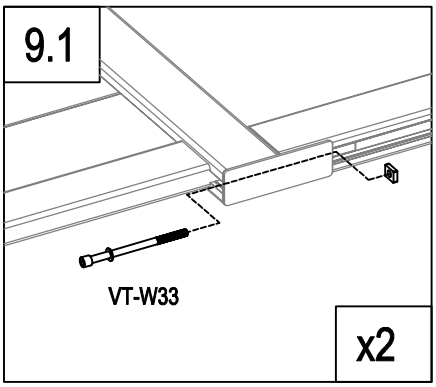

	AT-30	1
	AT-30a	1
	AT-17a	2

	VT-W33	2
	VT-W35	4

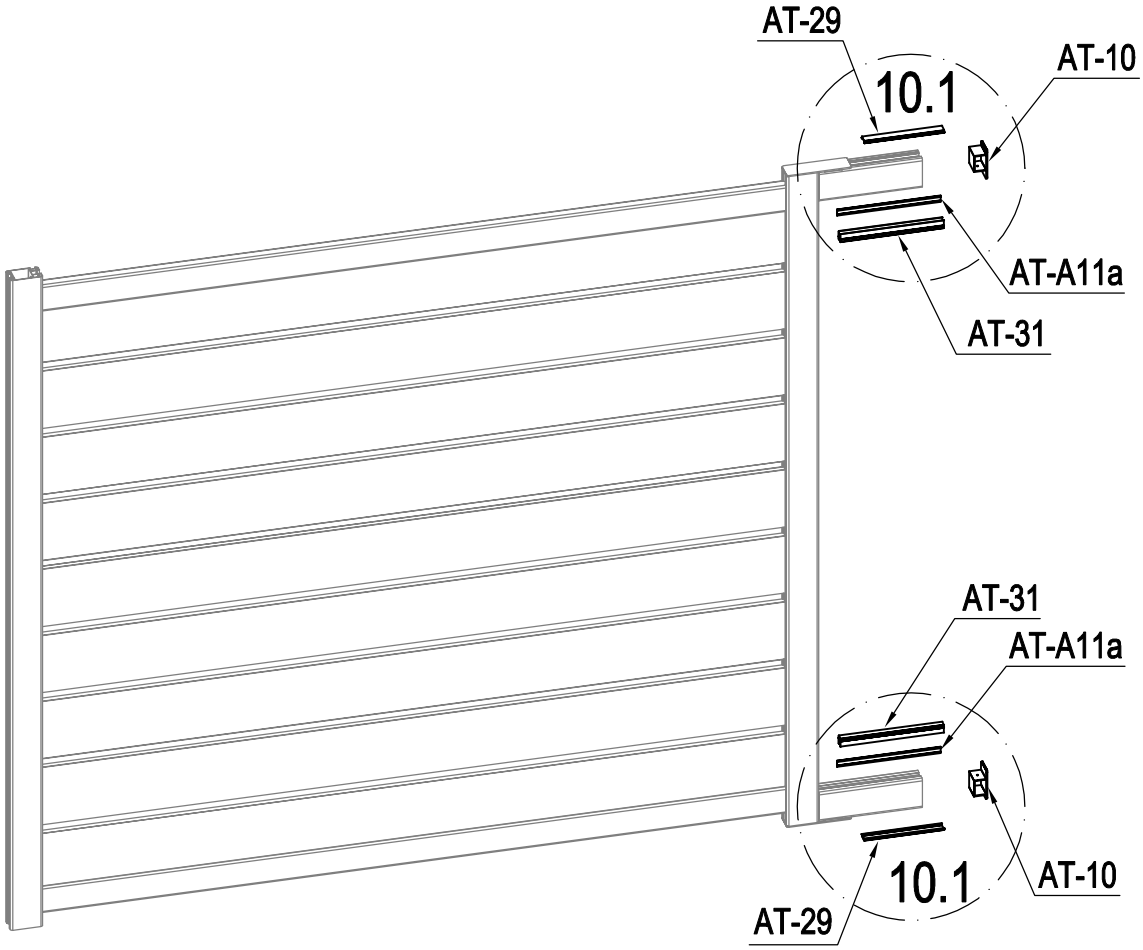

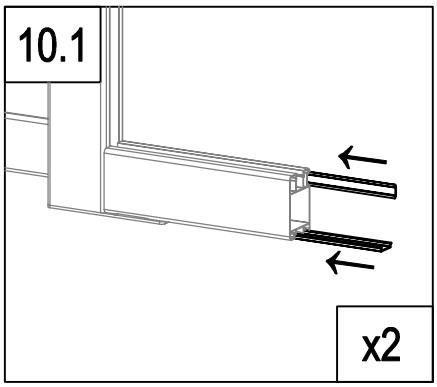

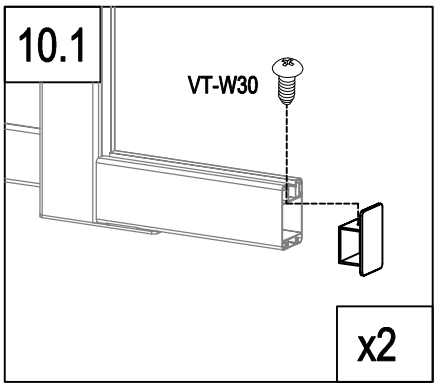

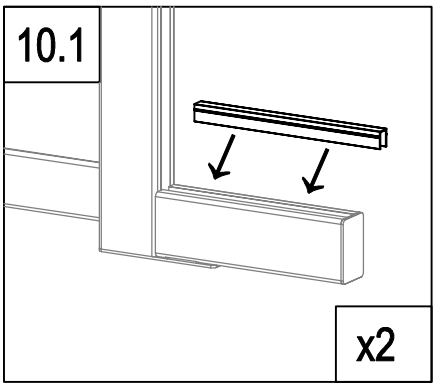

	AT-29	2
	AT-A11a	2
	AT-31	2

	AT-10	2
	VT-W30	2

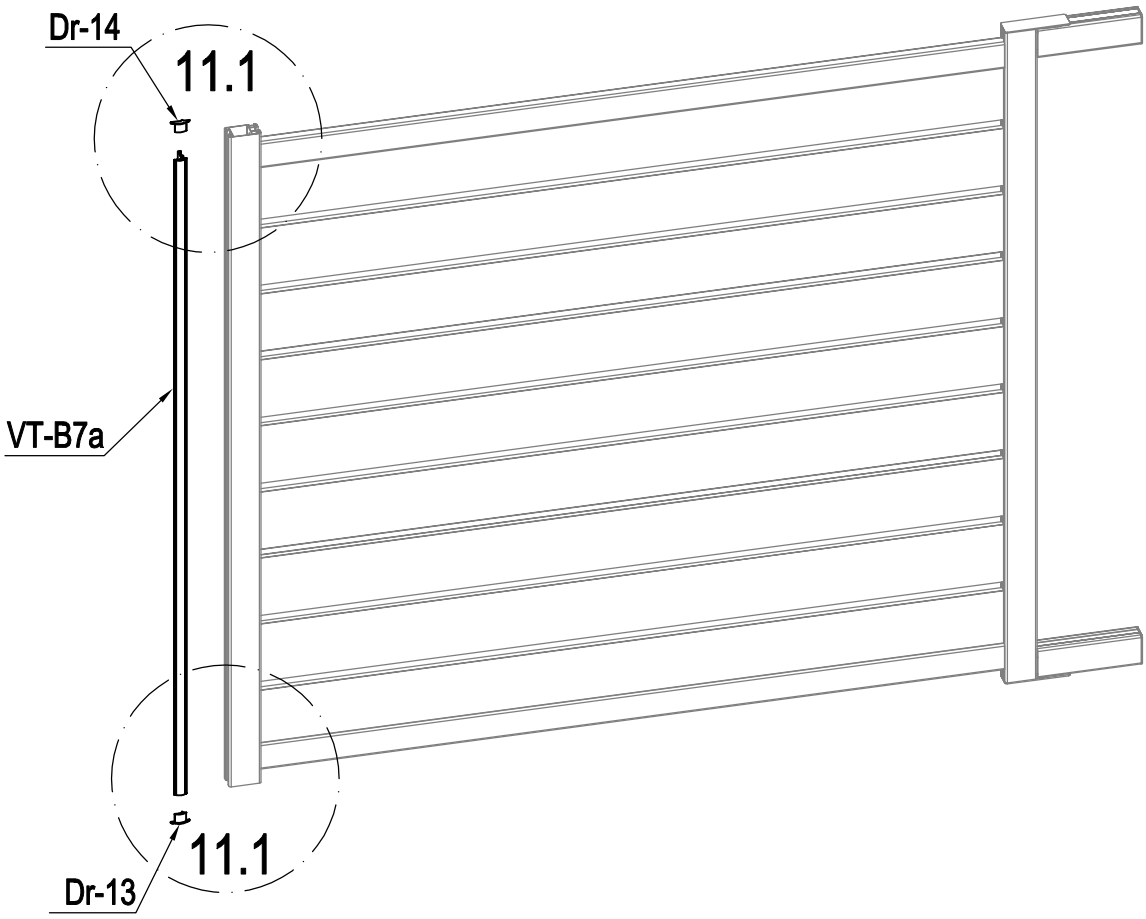

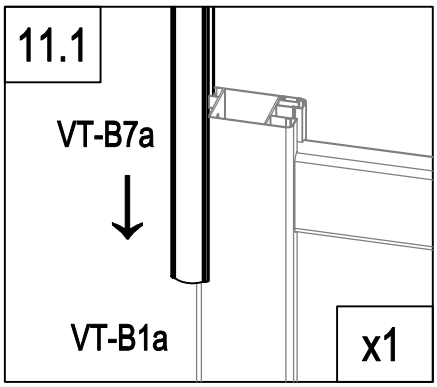

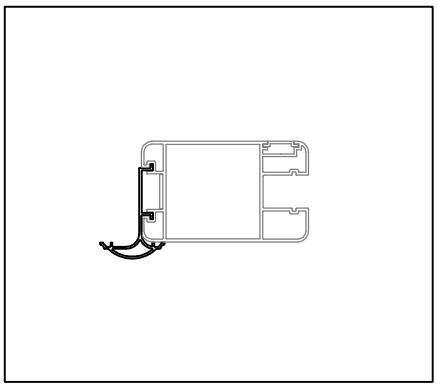

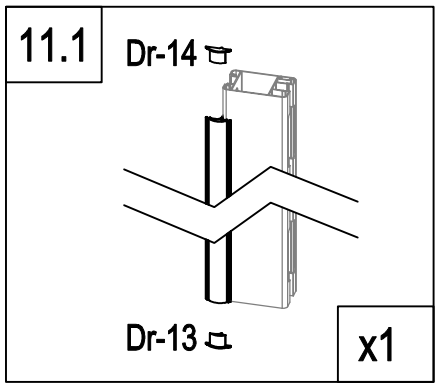

	VT-B7a	1
	Dr-13	1
	Dr-14	1

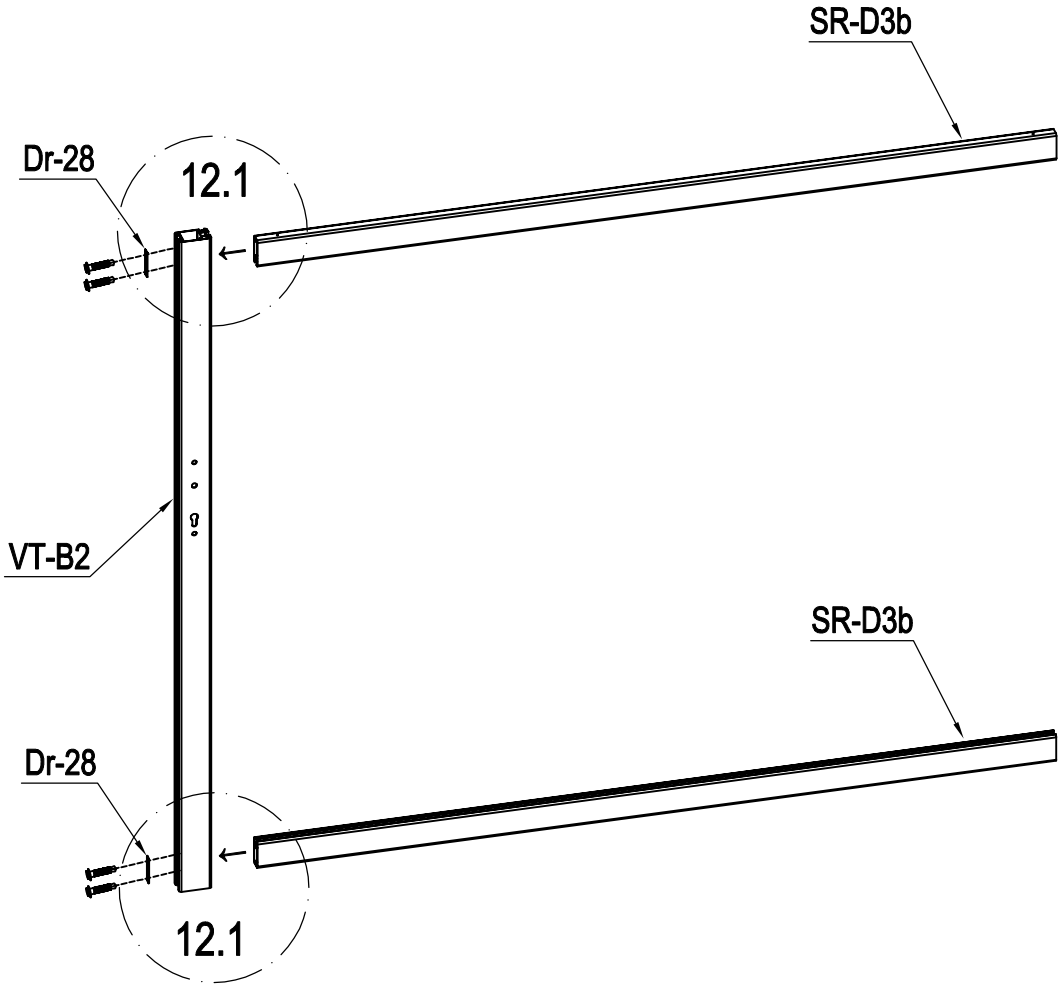

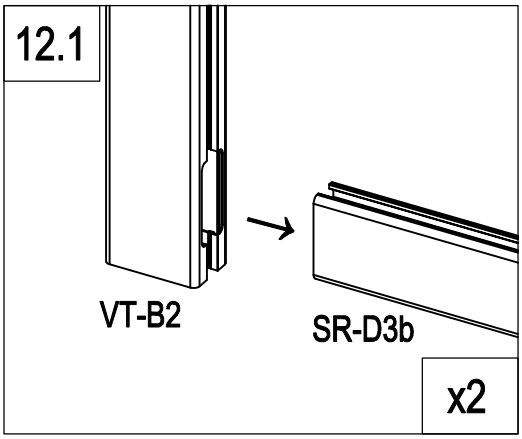

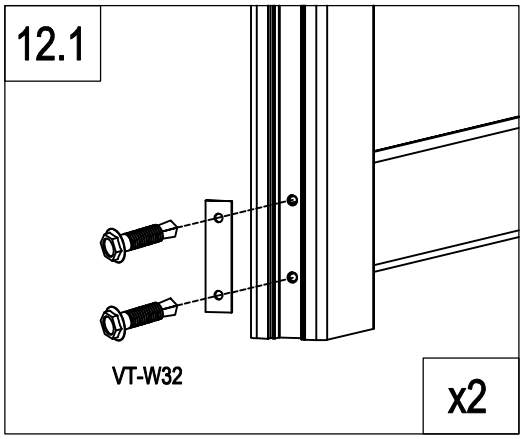

	VT-B2	1
	SR-D3b	2
	Dr-28	2
	VT-W32	4

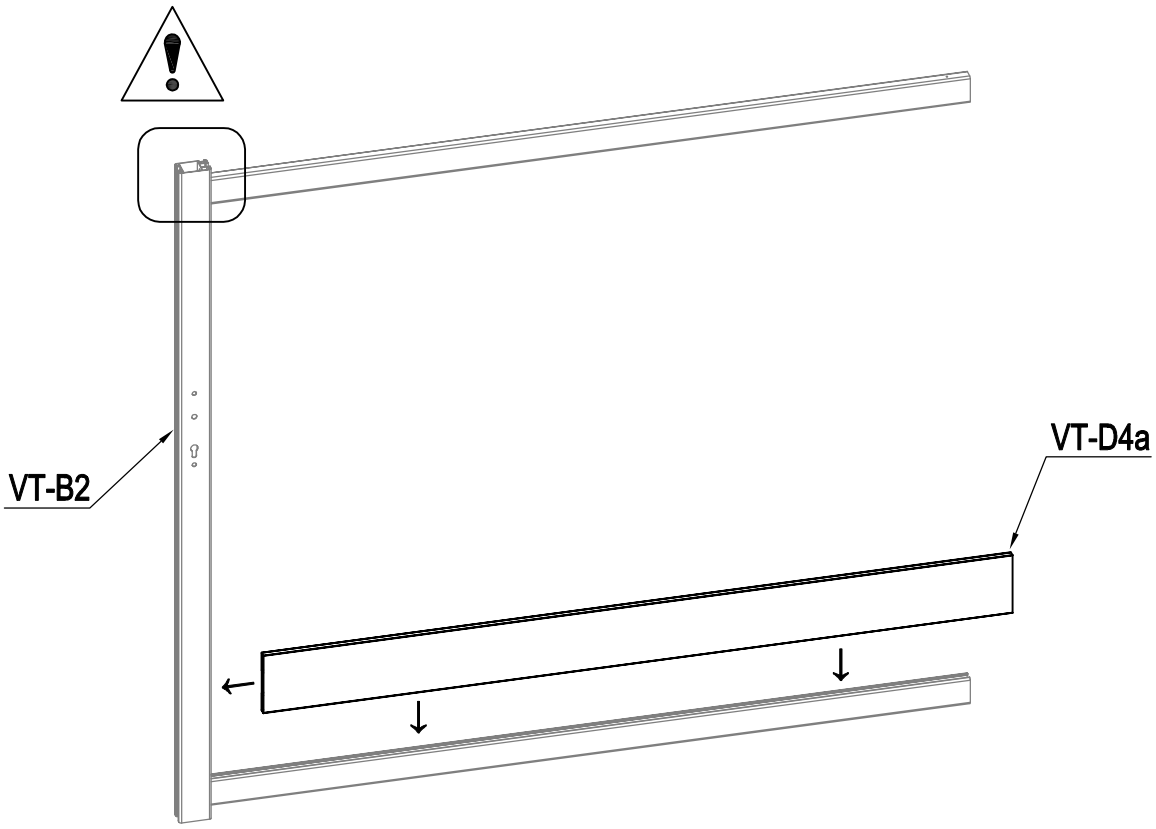

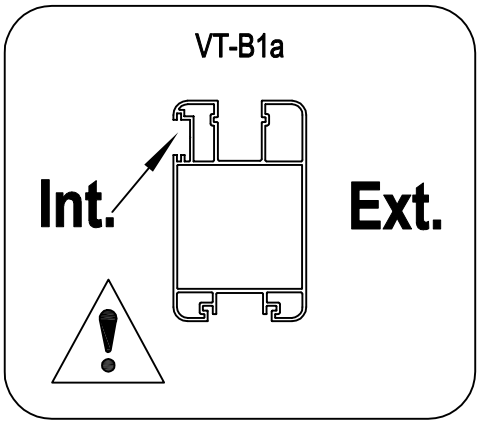

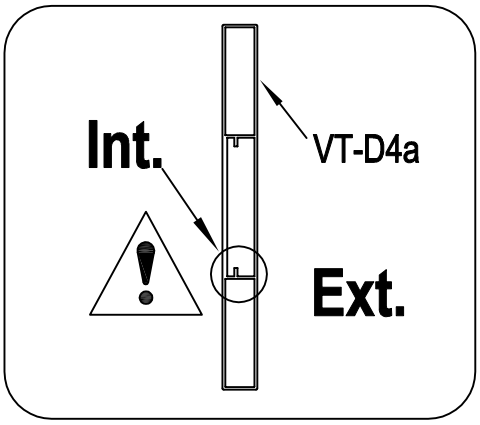

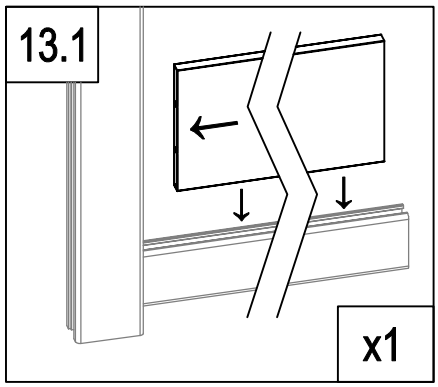

	VT-D4a	1

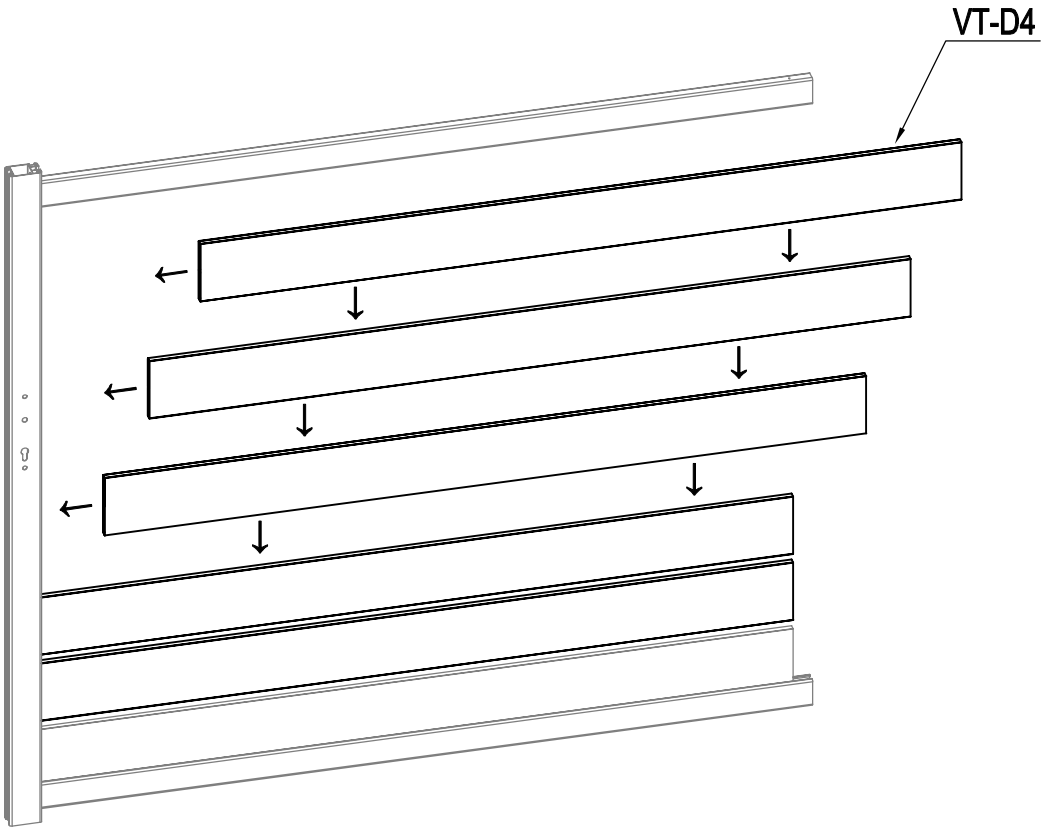

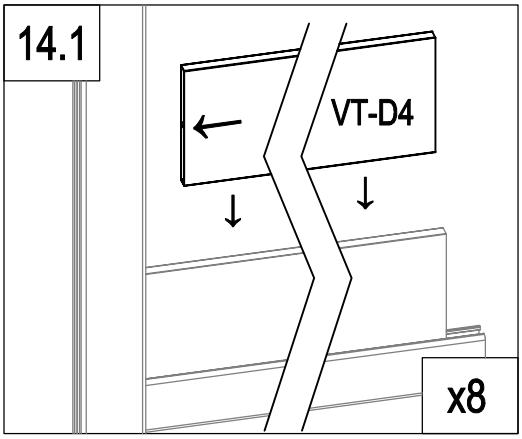

	VT-D4	8

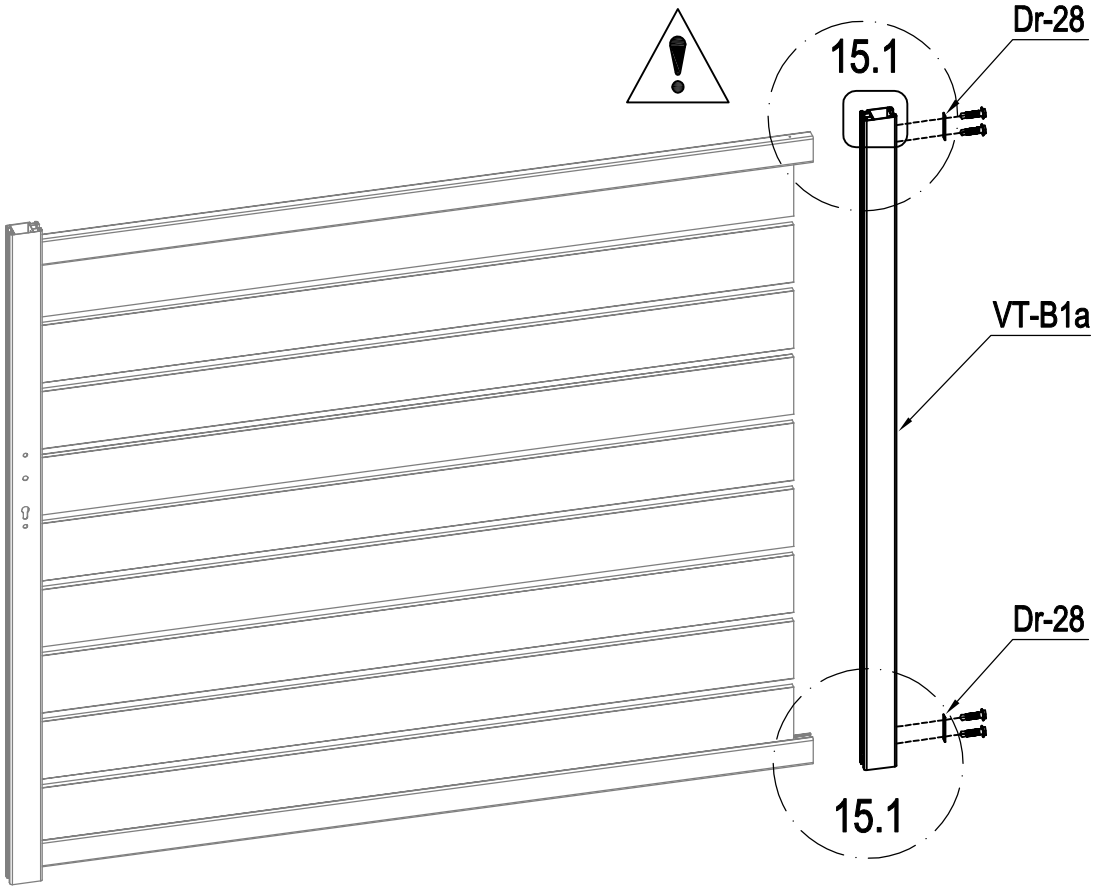

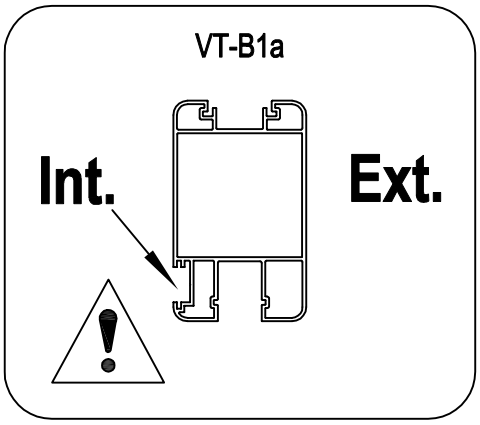

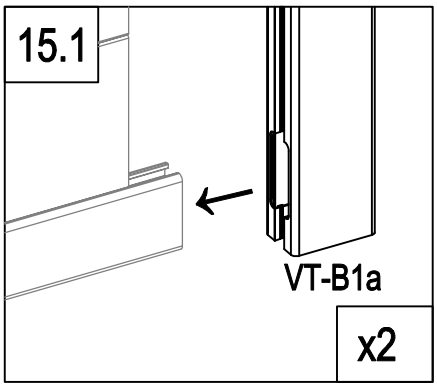

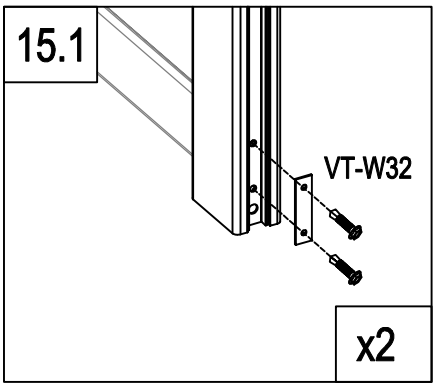

	VT-B1a	1
	Dr-28	2
	VT-W32	4

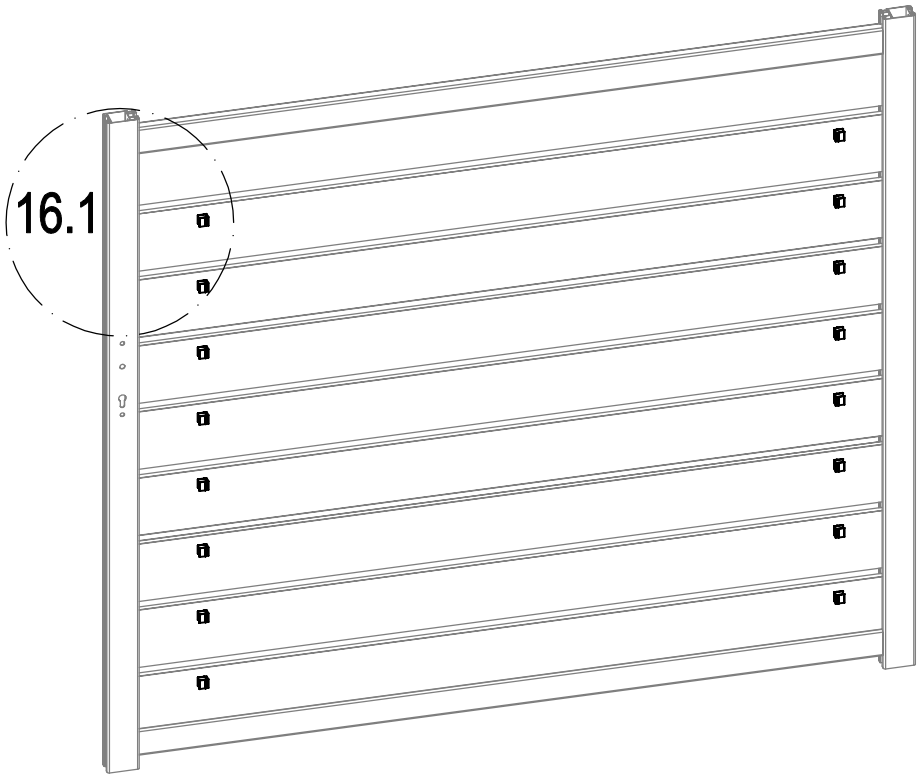

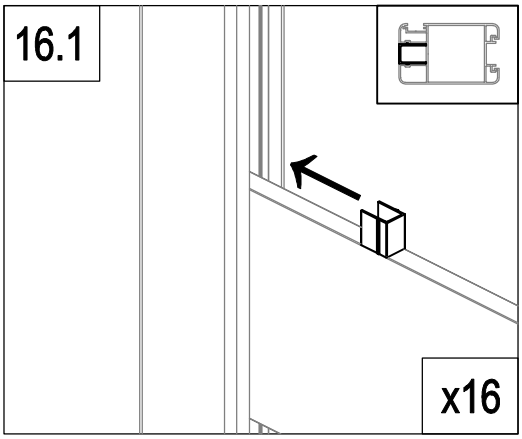

	VT-A6	16

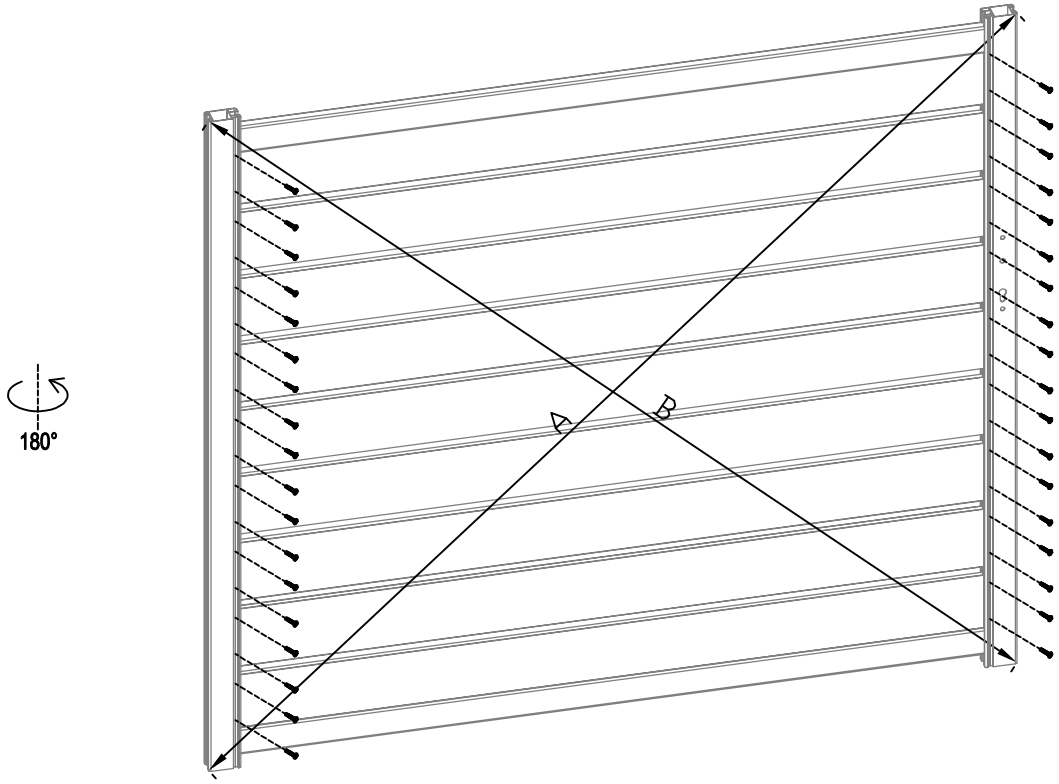

A=B

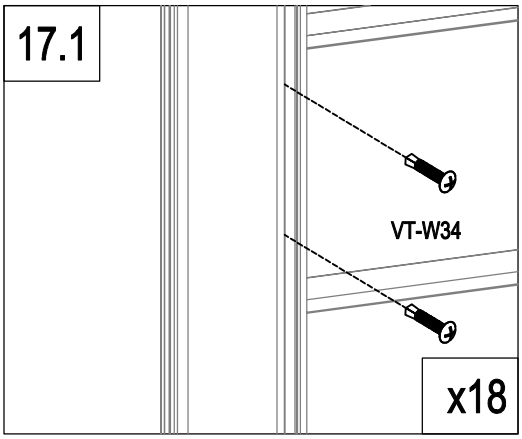

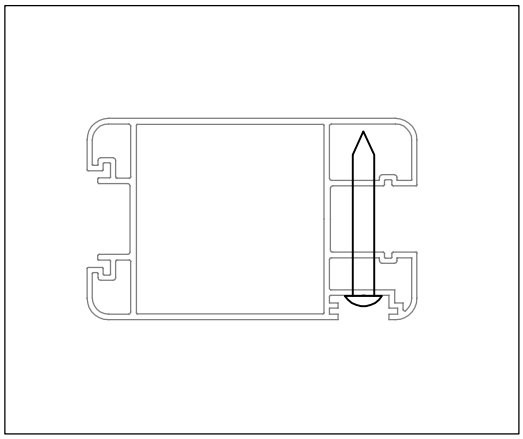

	VT-W34	36

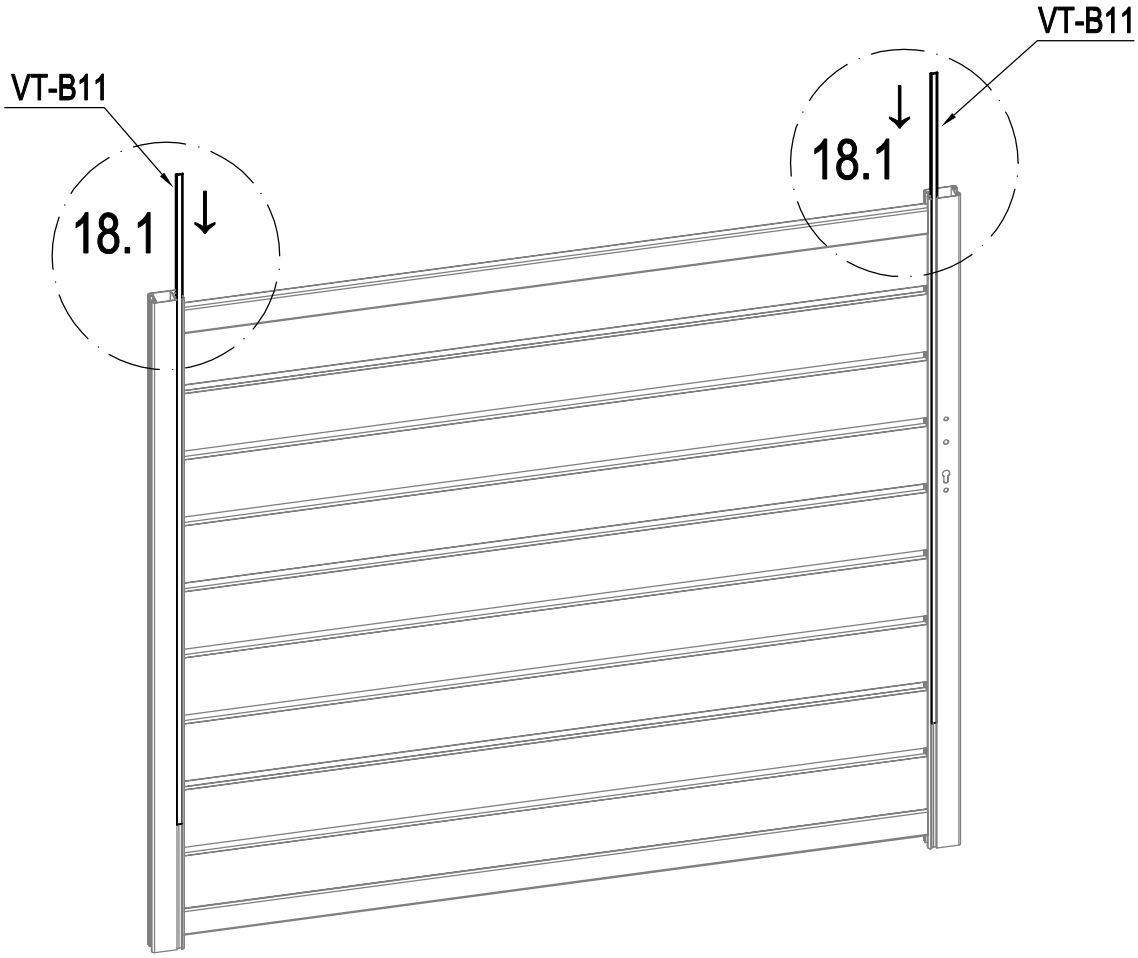

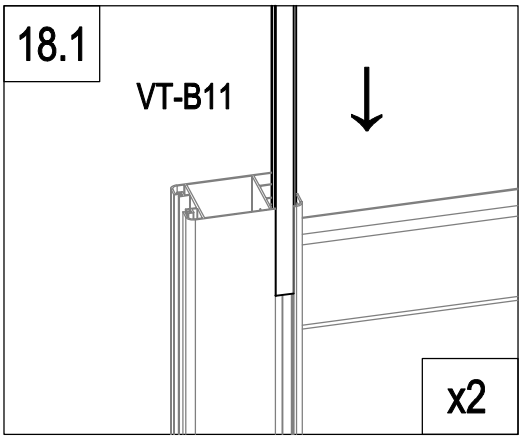

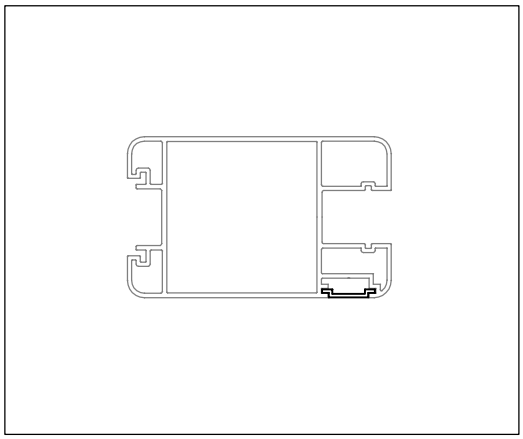

	VT-B11	2

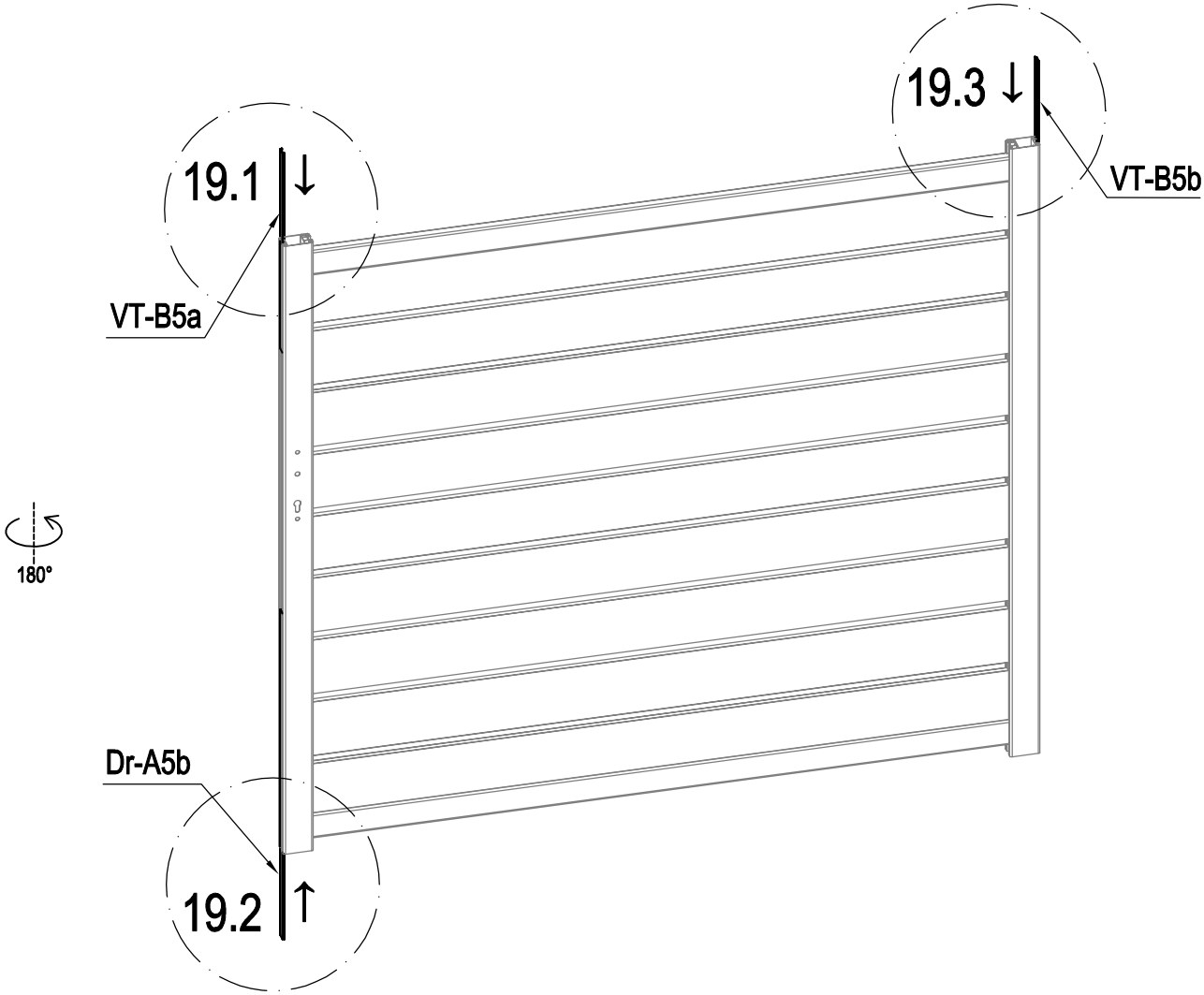

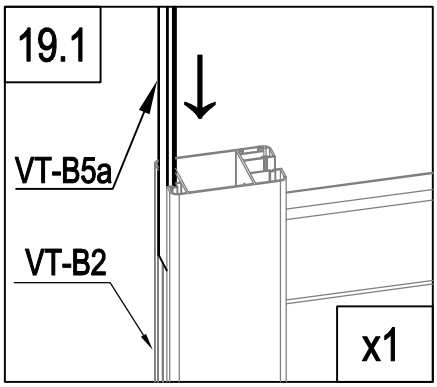

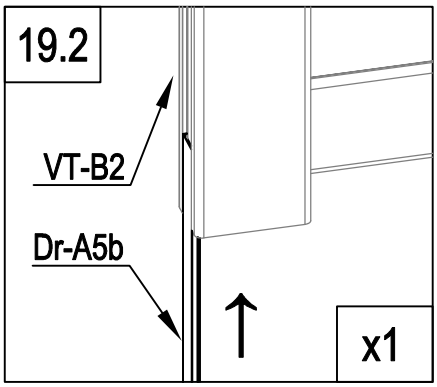

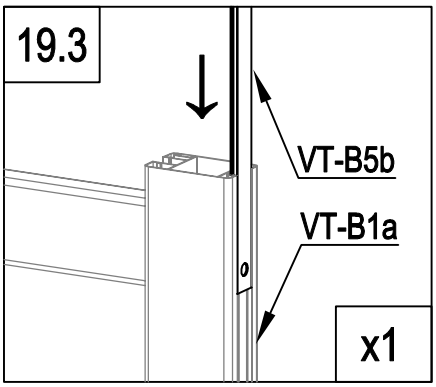

	VT-B5b	1
	VT-B5a	1
	Dr-A5b	1

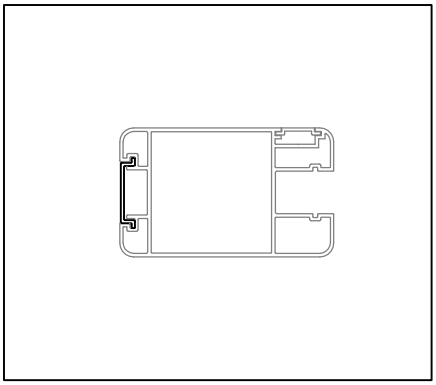

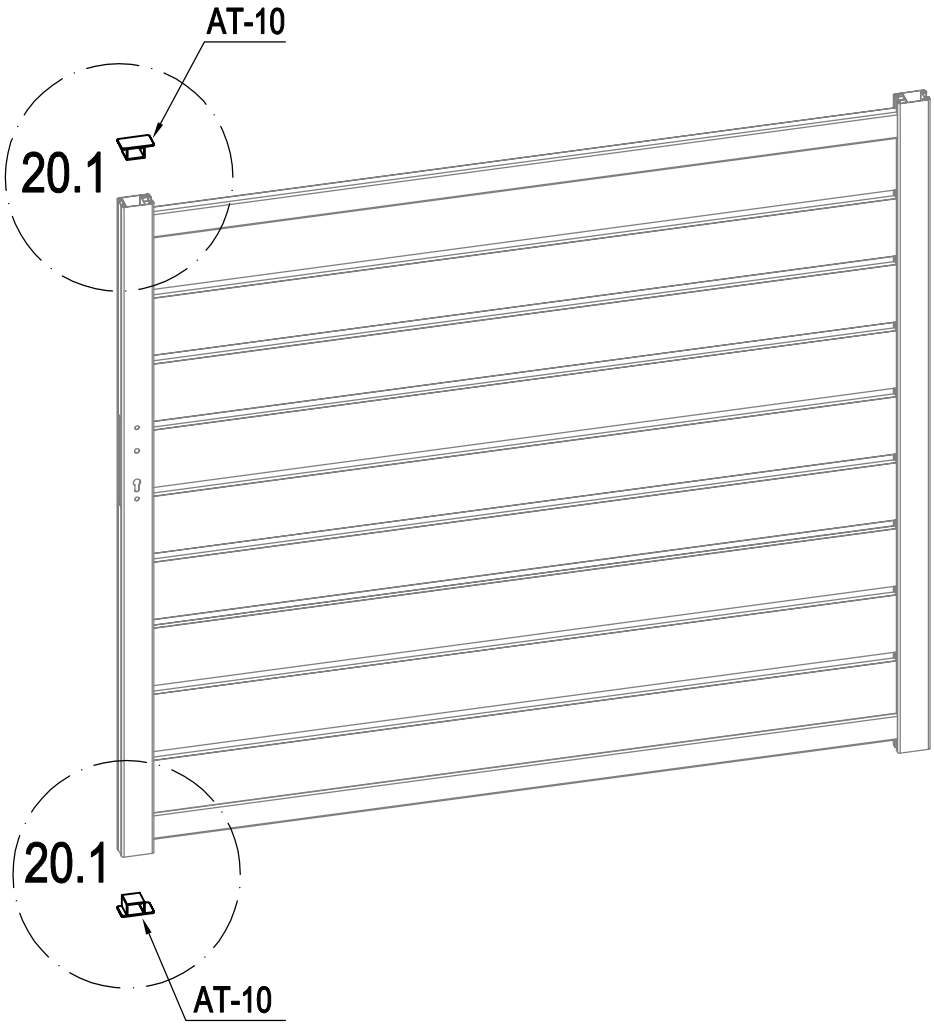

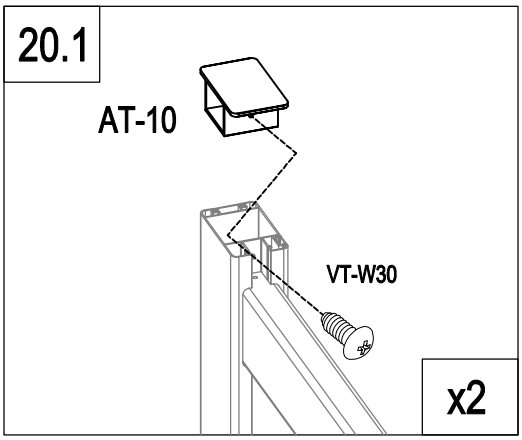

	AT-10	2
	VT-W30	2

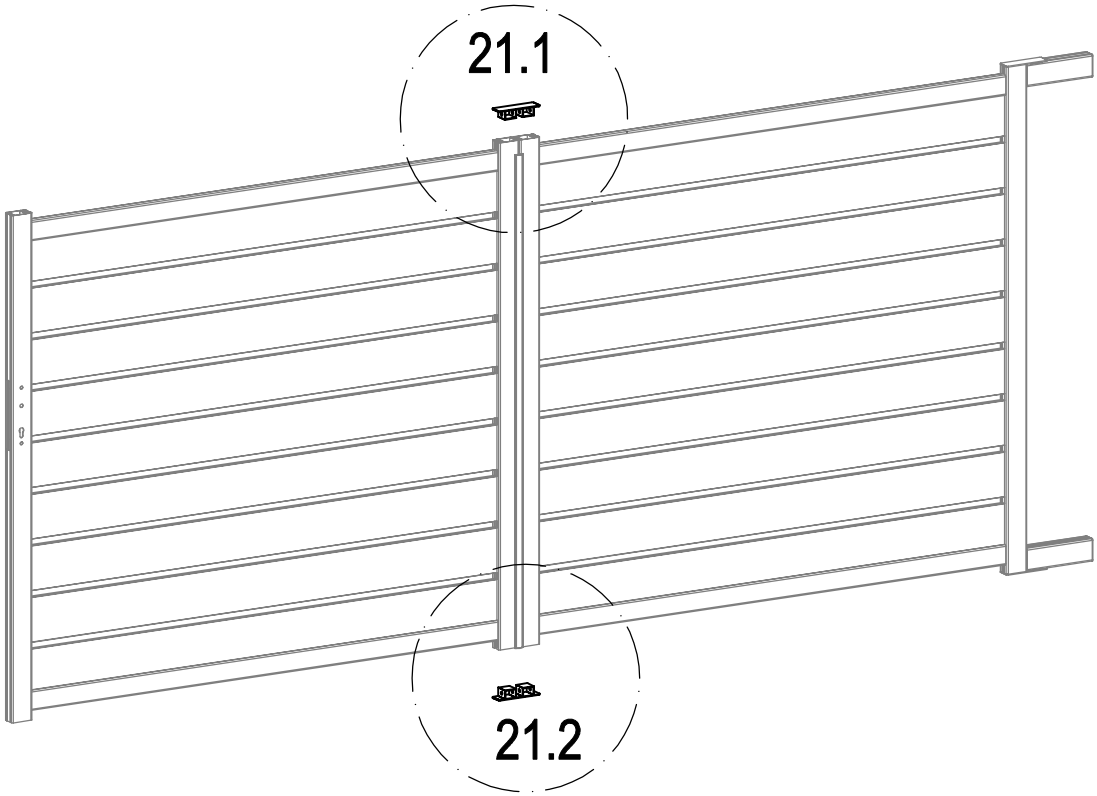

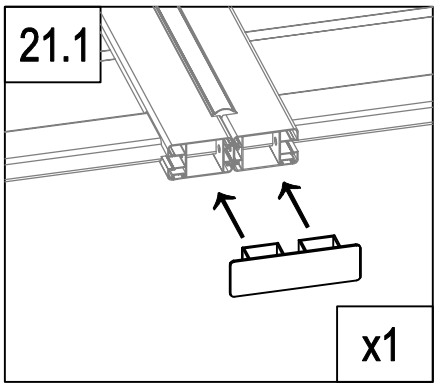

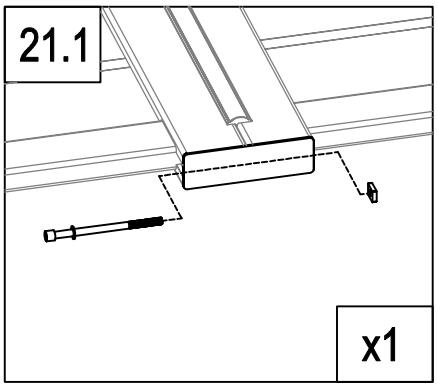

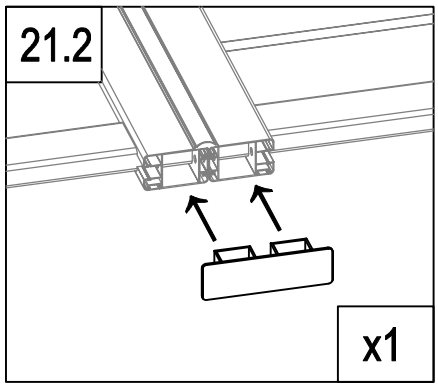

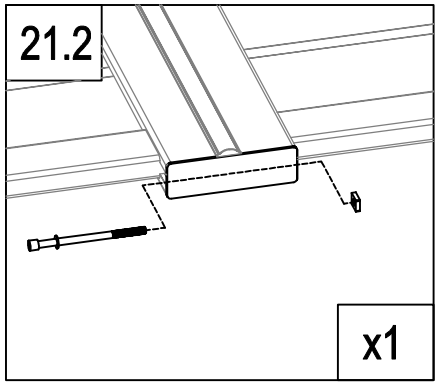

	AT-17	2
	VT-W33	2

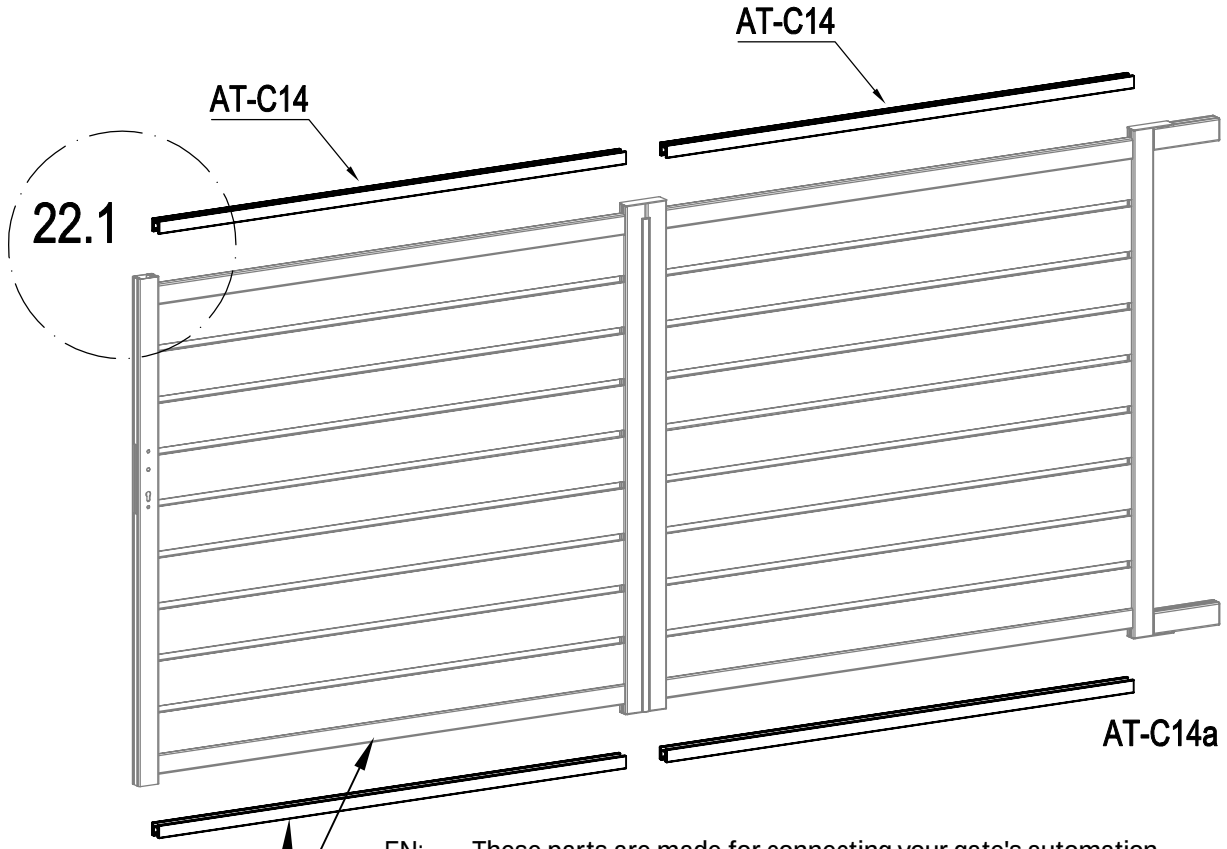

EN: These parts are made for connecting your gate's automation
FR: Ces pièces sont faites pour relier l'automatisation de votre portail
DE: Diese Teile sind für den Anschluss der Automatisierung Ihres Tores vorgesehen
ES: Estas piezas están hechas para conectar la automatización de su puerta
PT : Estas peças são feitas para ligar a automatização do seu portão
IT: Queste parti sono realizzate per collegare l'automazione del vostro cancello
NL: Deze onderdelen zijn gemaakt voor het aansluiten van de automatisering van uw poort.
PL: Te części są wykonane do podłączenia automatyki bramy.

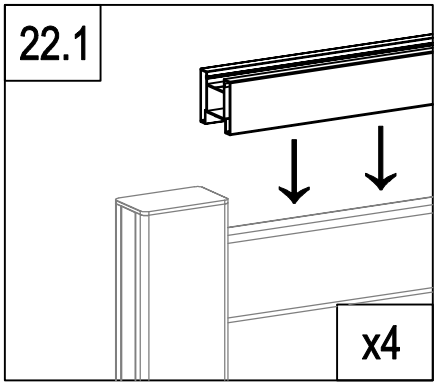

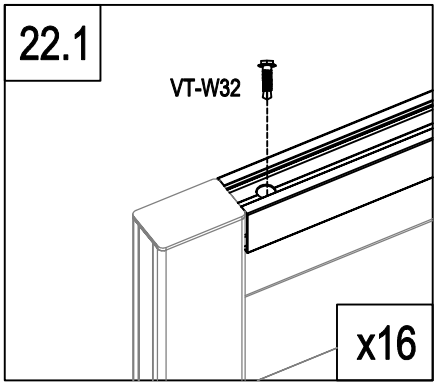

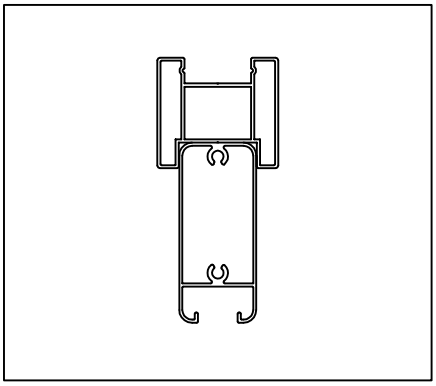

	AT-C14	2
	AT-C14a	2
	VT-W32	16

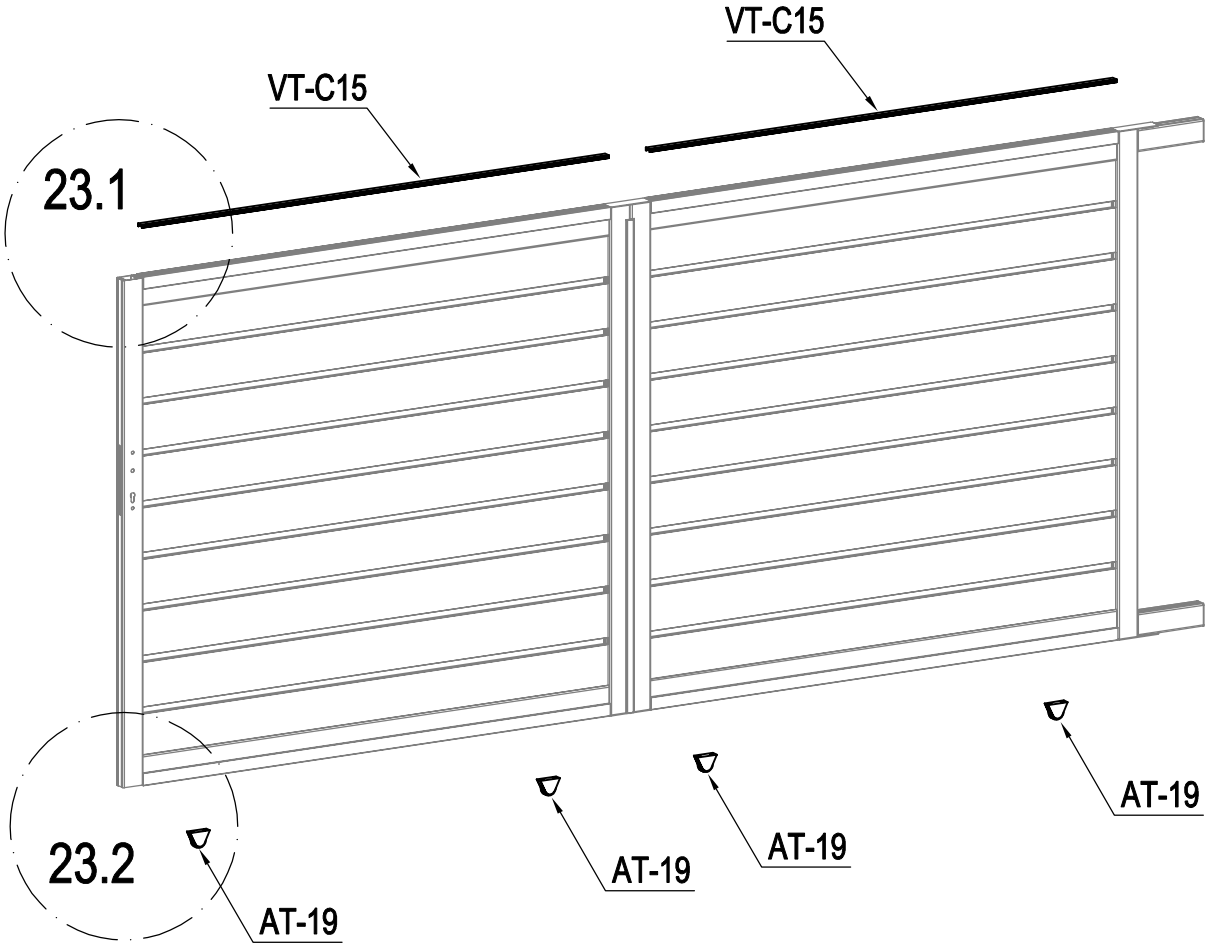

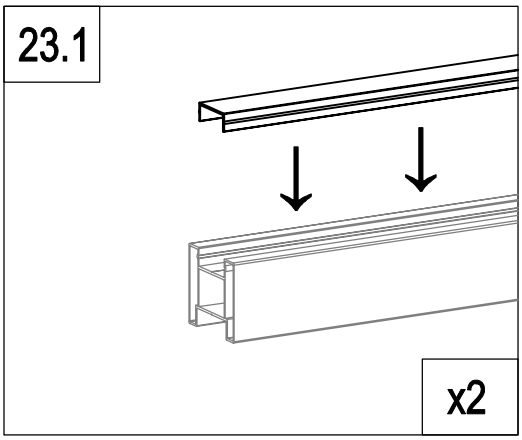

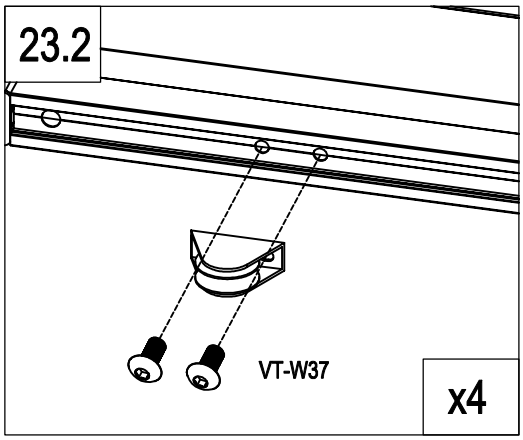

	VT-C15	2
	AT-19	4
	VT-W37	8

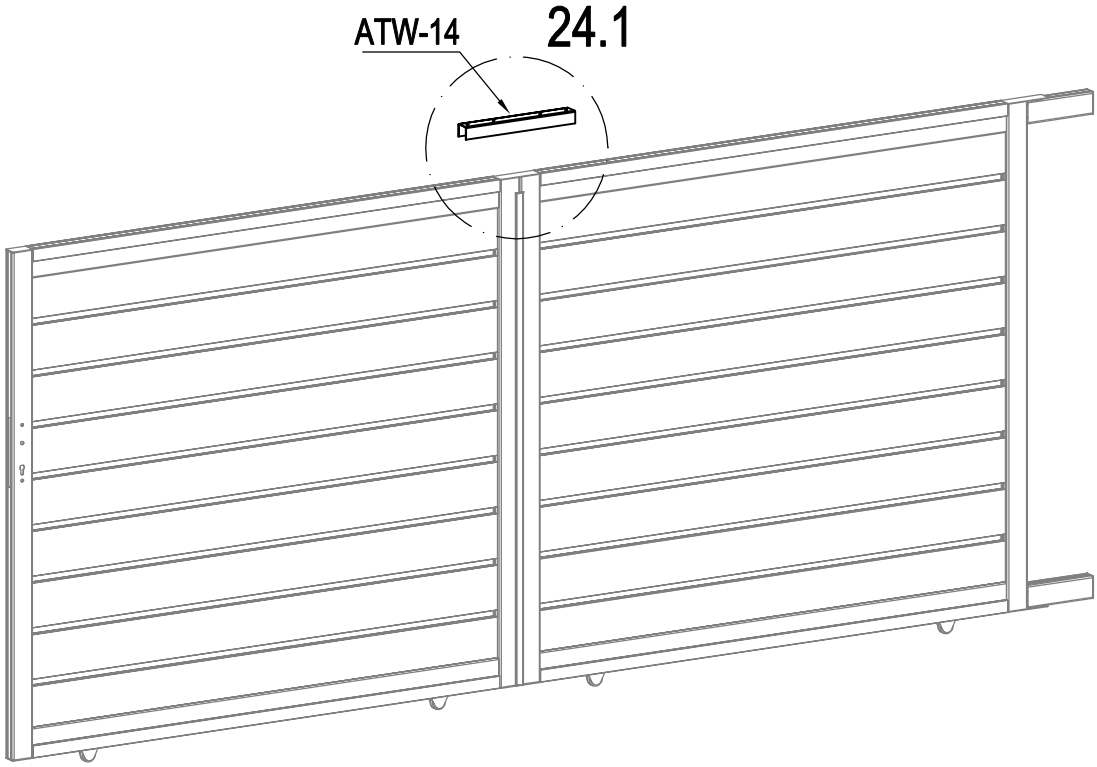

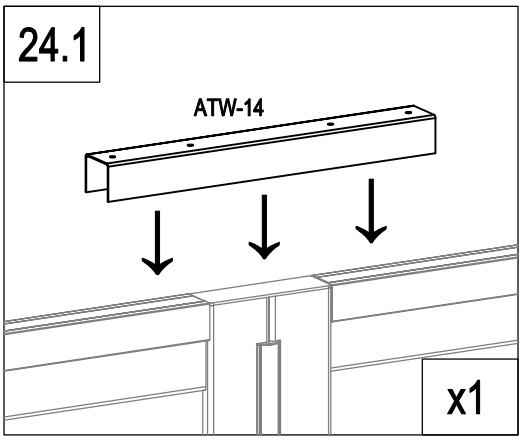

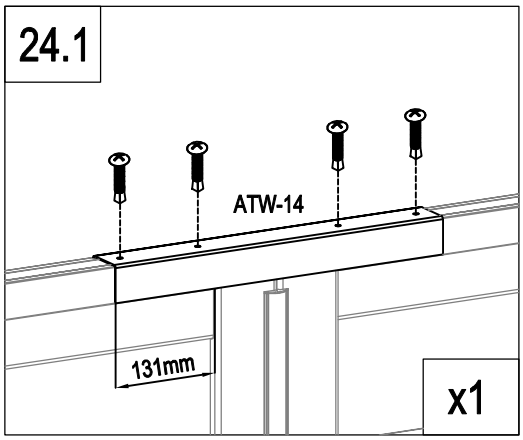

	ATW-14	1
	VT-W34	4

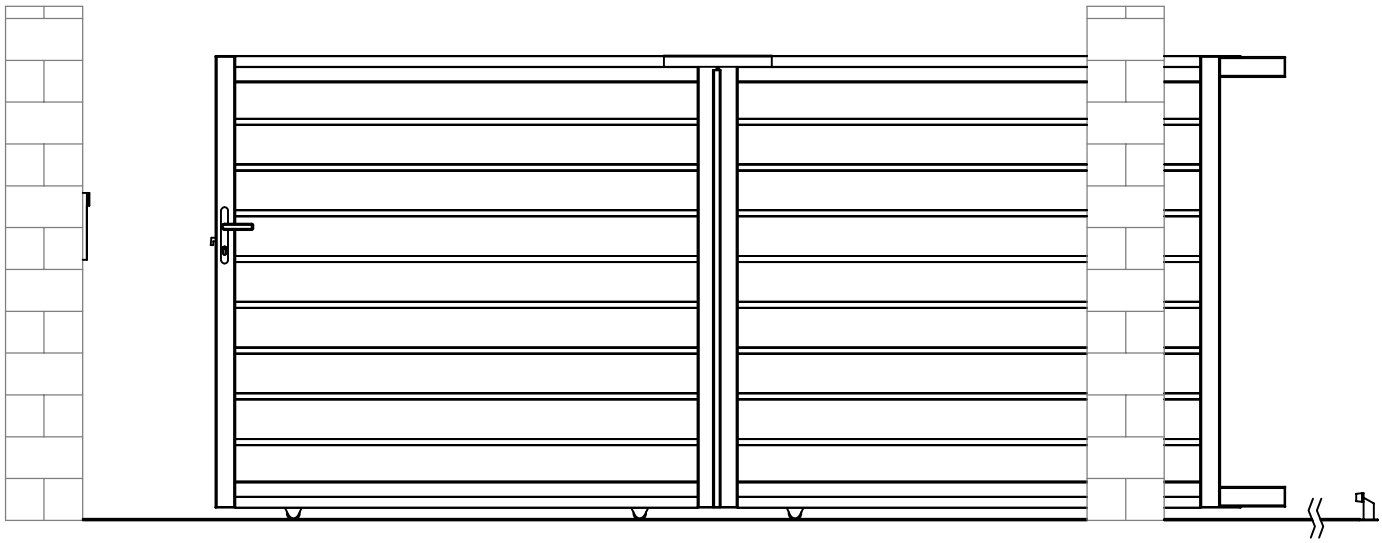

L : P25~30

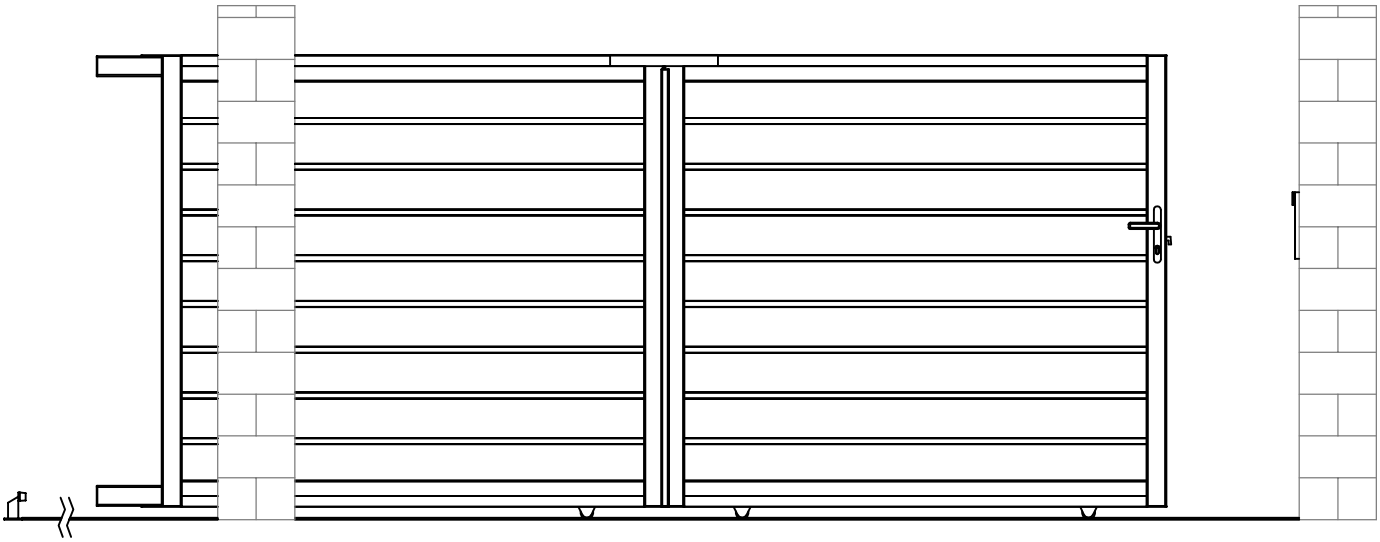

R : P31~36

L

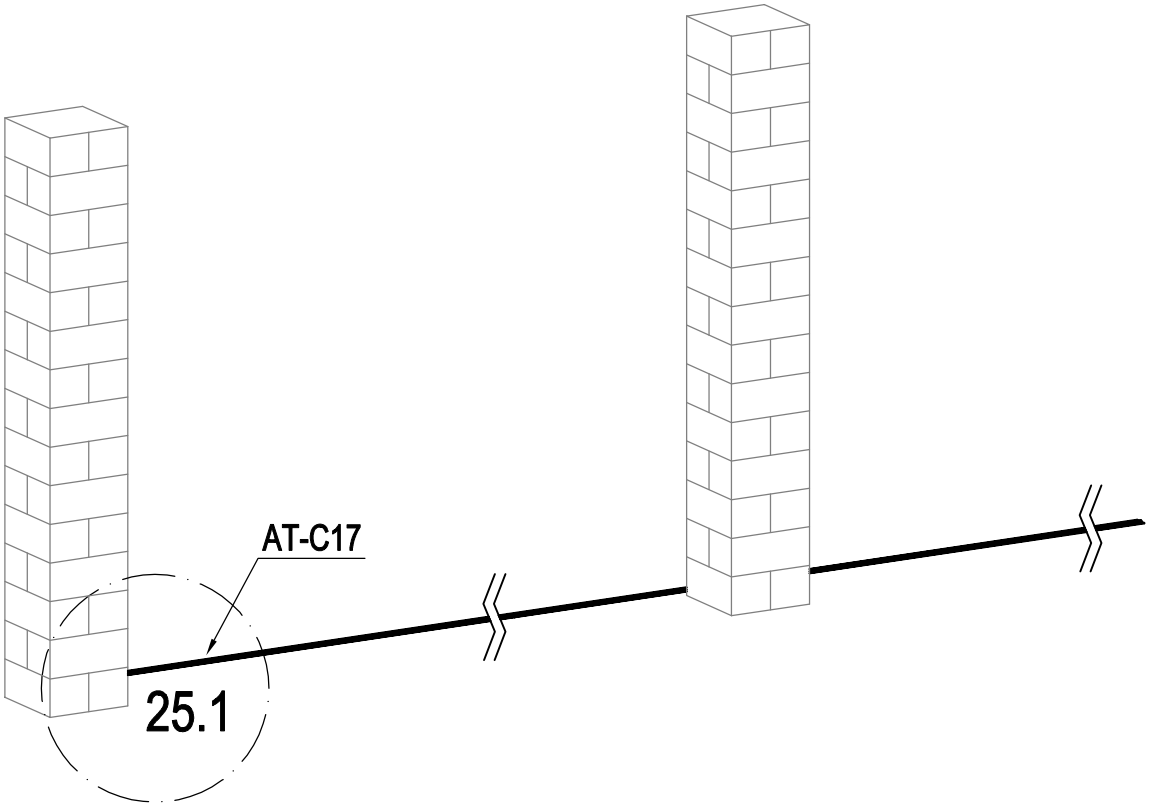

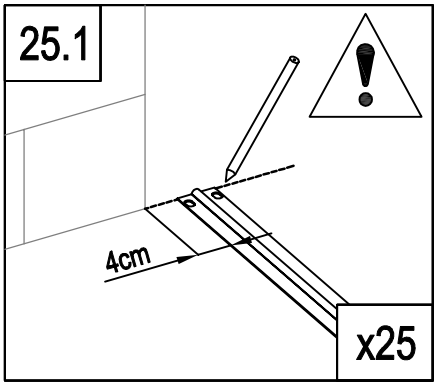

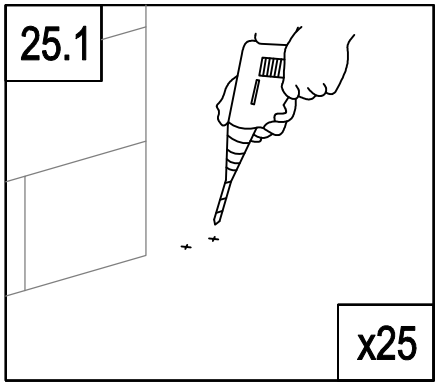

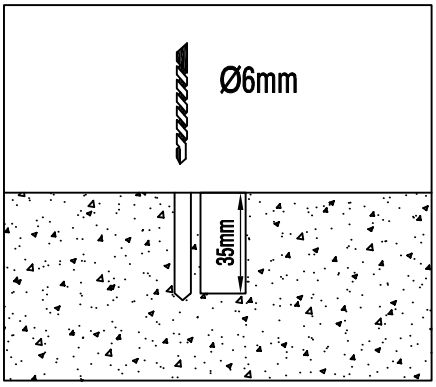

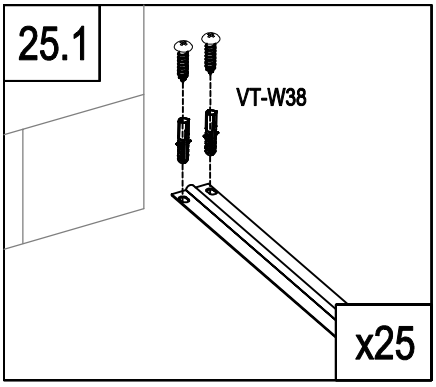

	AT-C17	5
	VT-W38	50

L

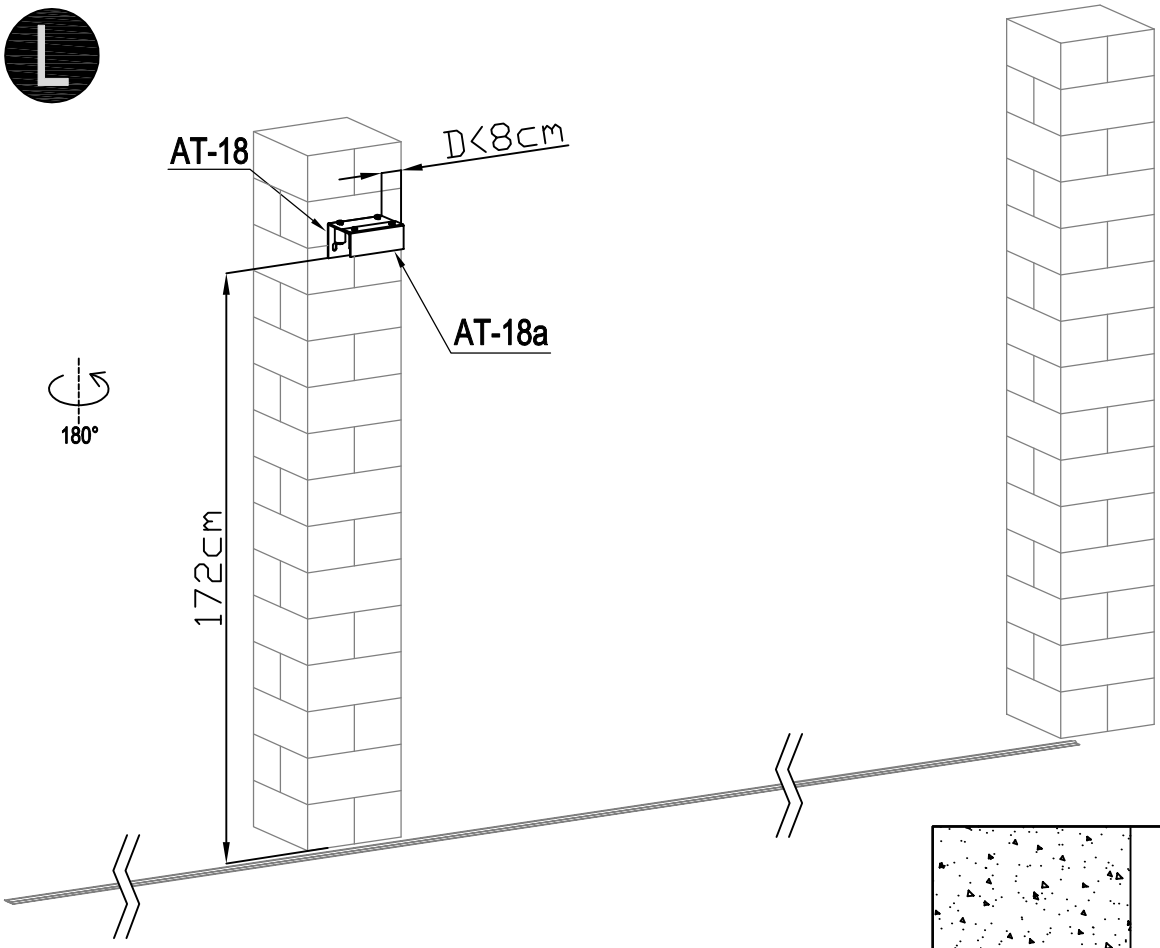

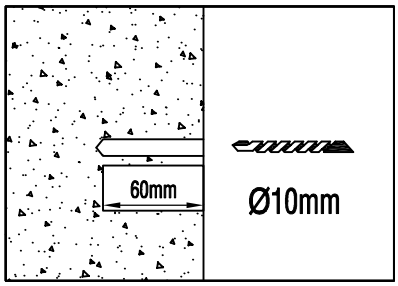

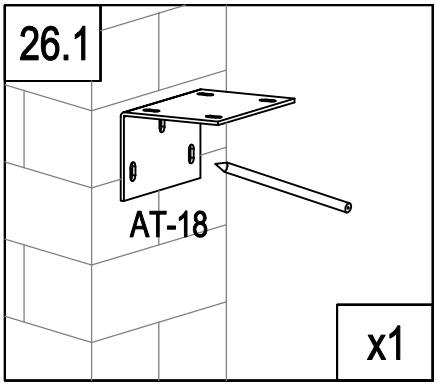

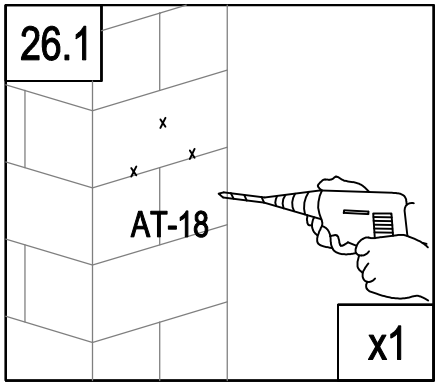

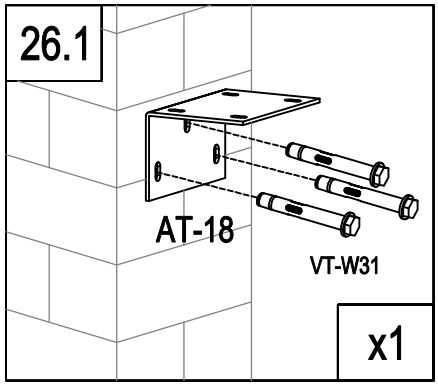

	AT-18	1
	AT-18a	1
	AT-20	4
	VT-W31	3

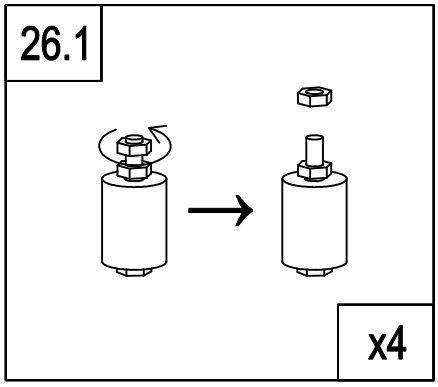

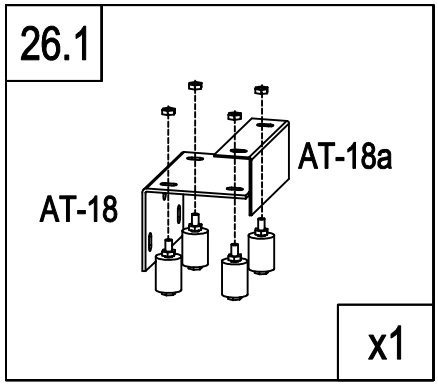

L

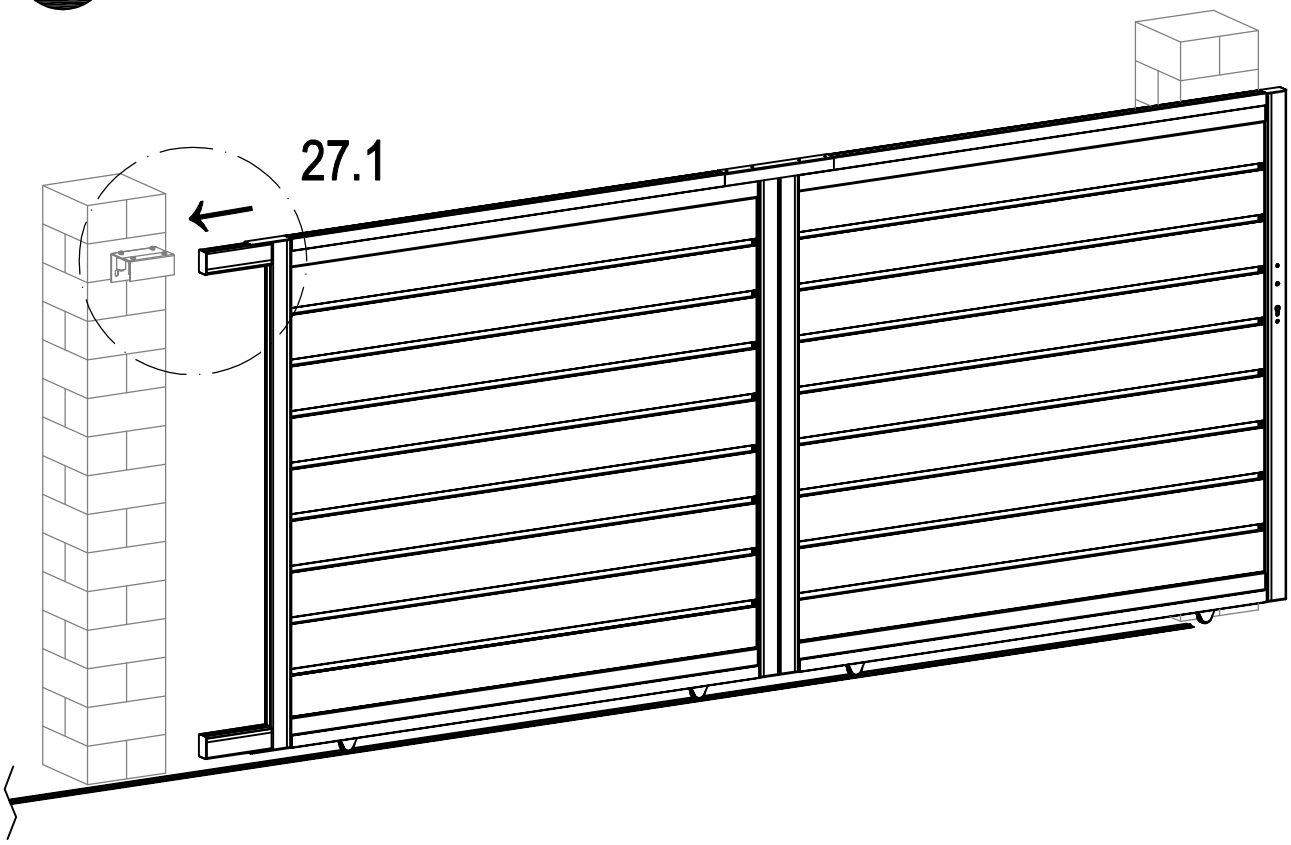

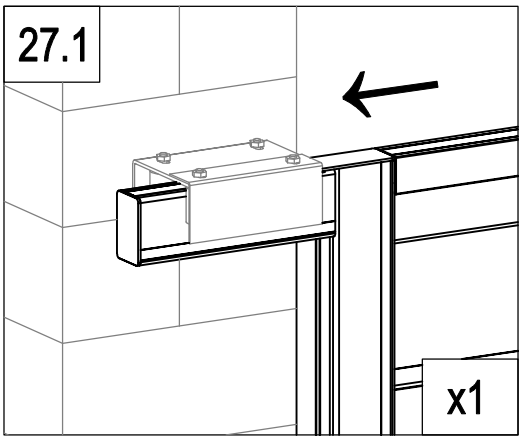

L

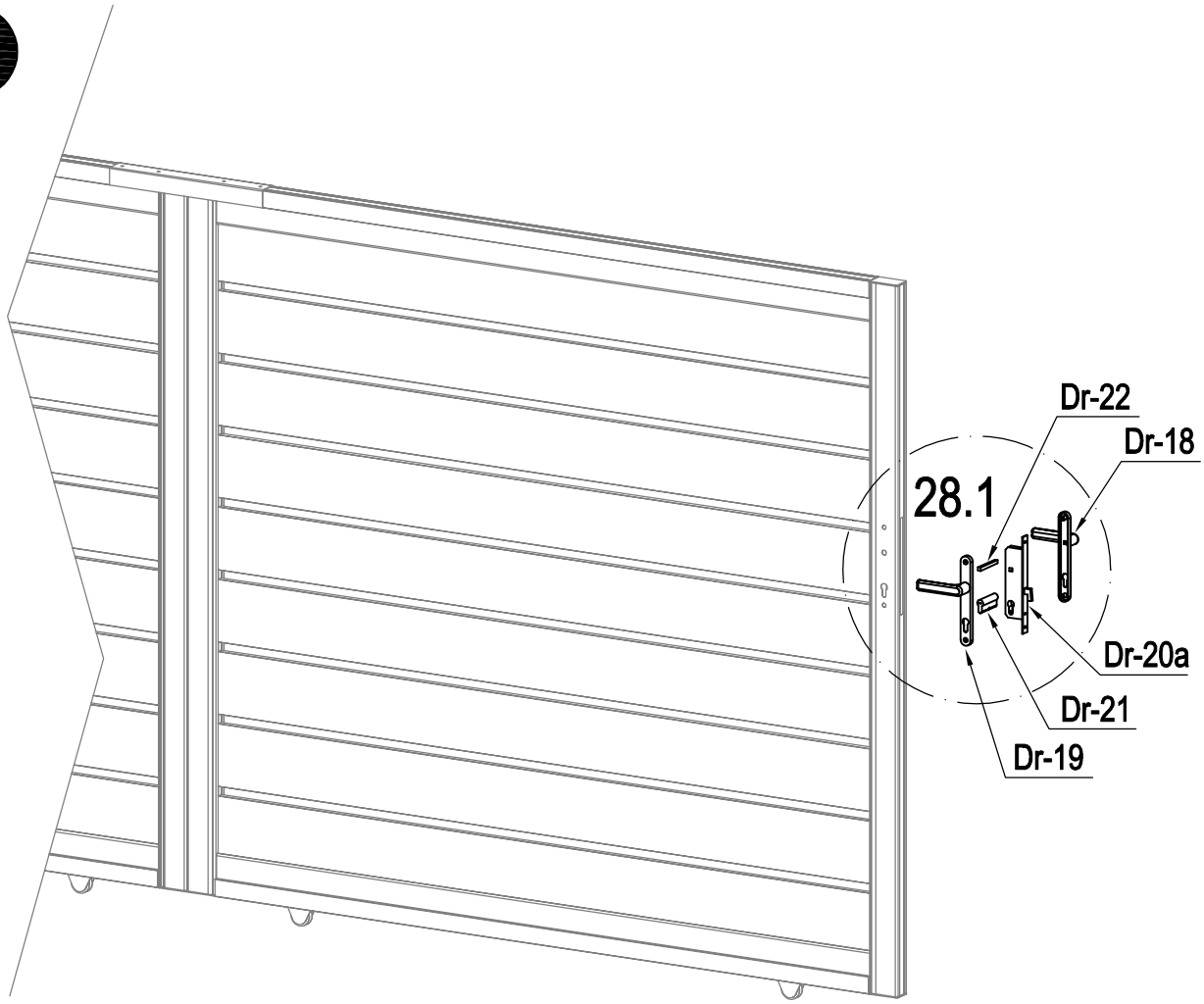

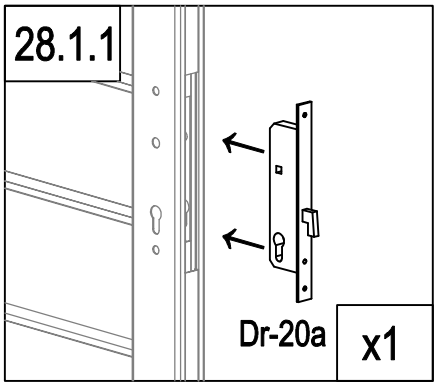

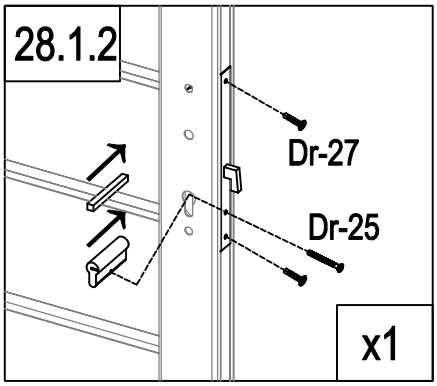

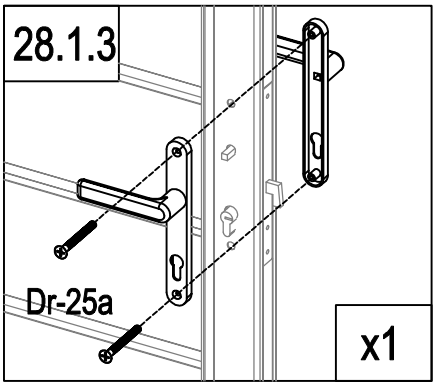

	Dr-20a	1
	Dr-21	1
	Dr-22	1
	Dr-25	1

	Dr-18	1
	Dr-19	1
	Dr-25a	2
	Dr-27	2

L

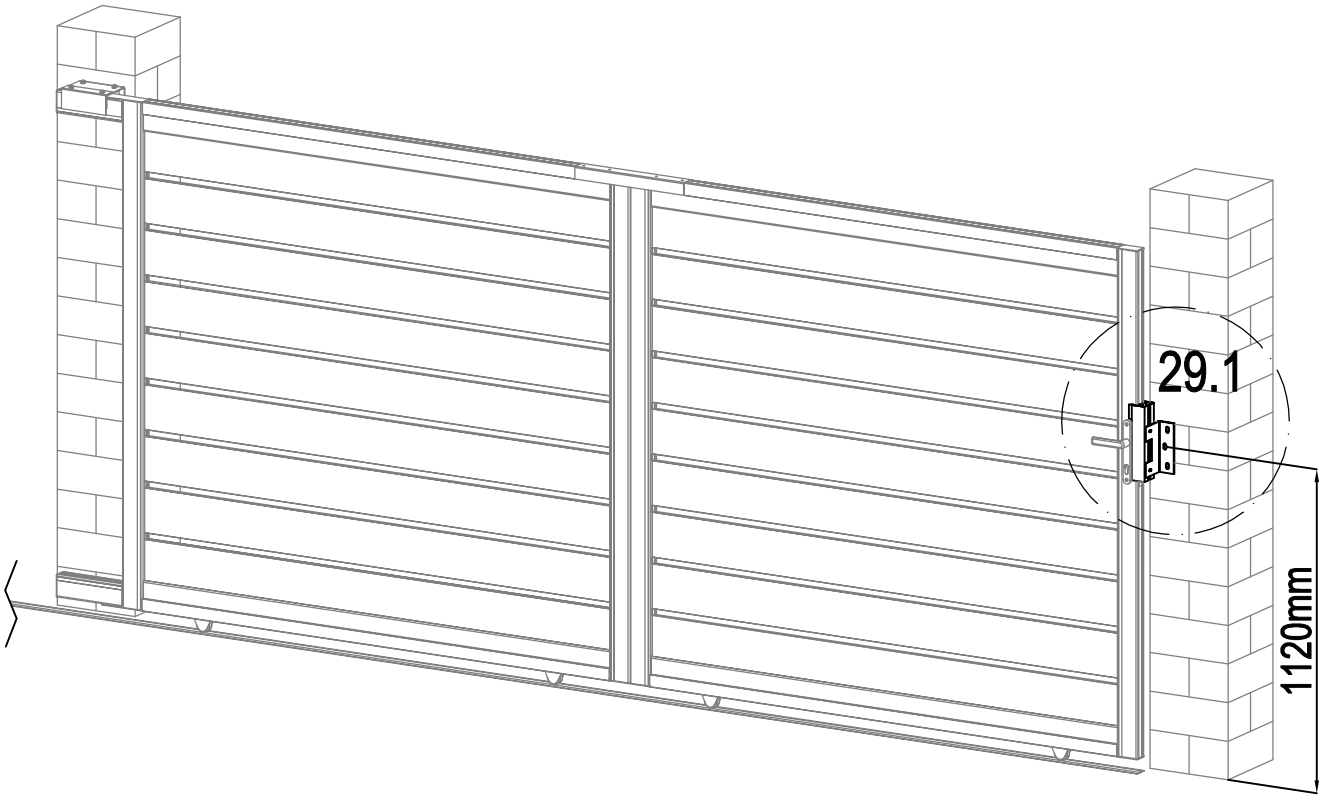

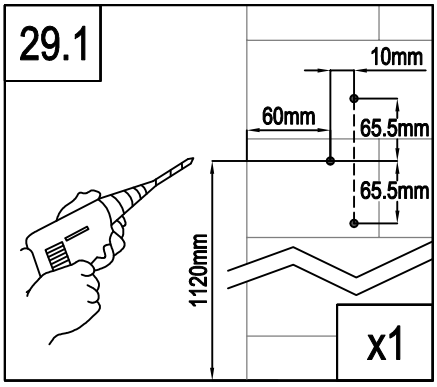

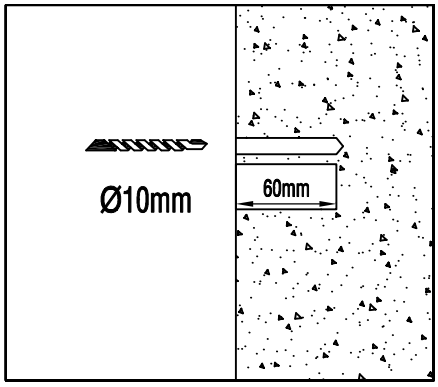

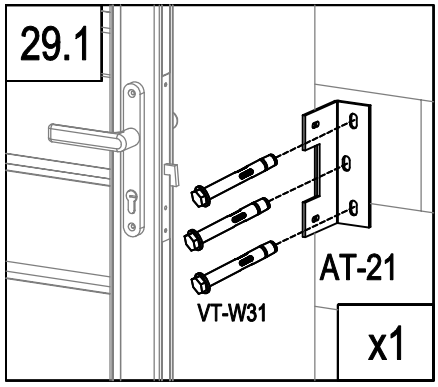

	AT-16	1
	AT-21	1
	VT-W36	2
	VT-W31	3
	AT-22J	3

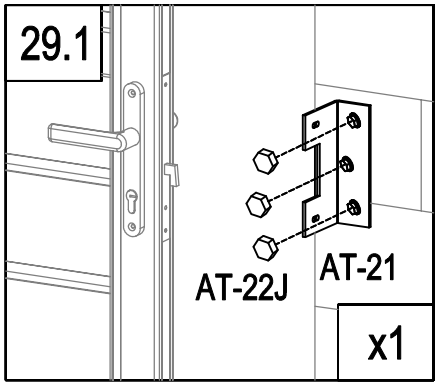

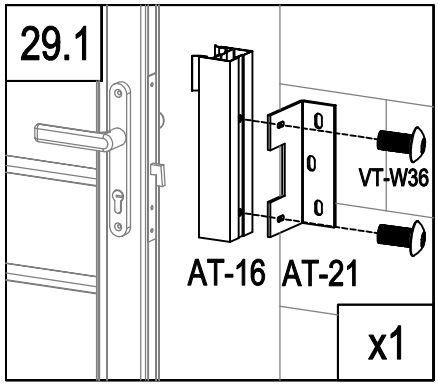

L

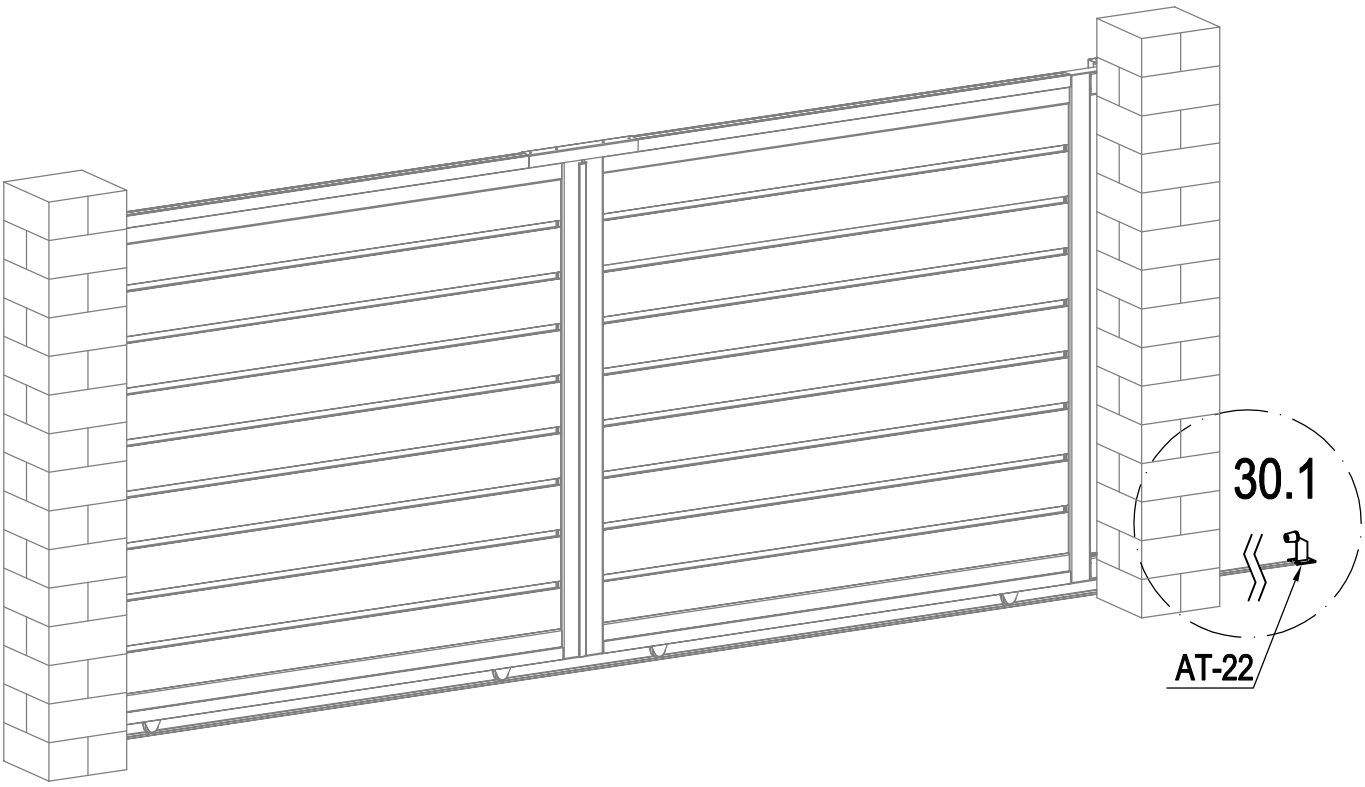

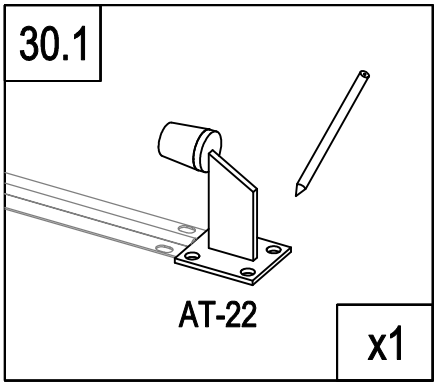

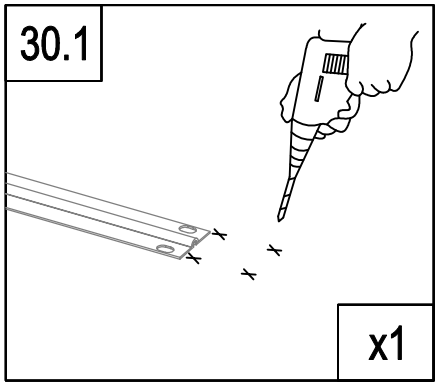

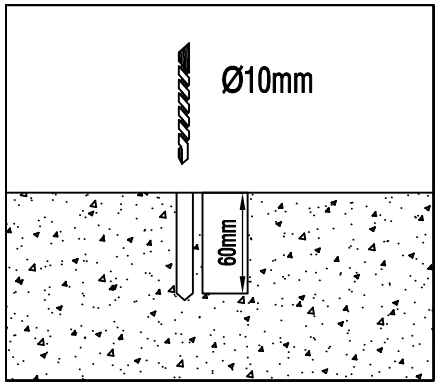

	AT-22	1
	VT-W31	4
	AT-22J	4

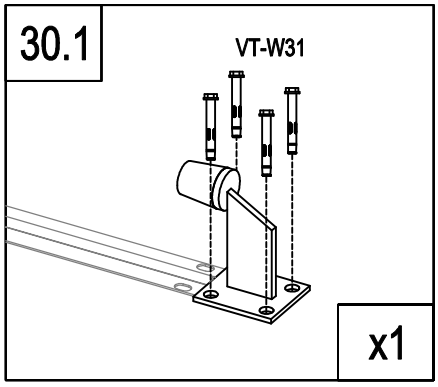

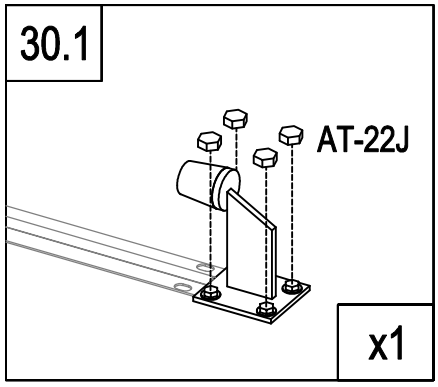

R

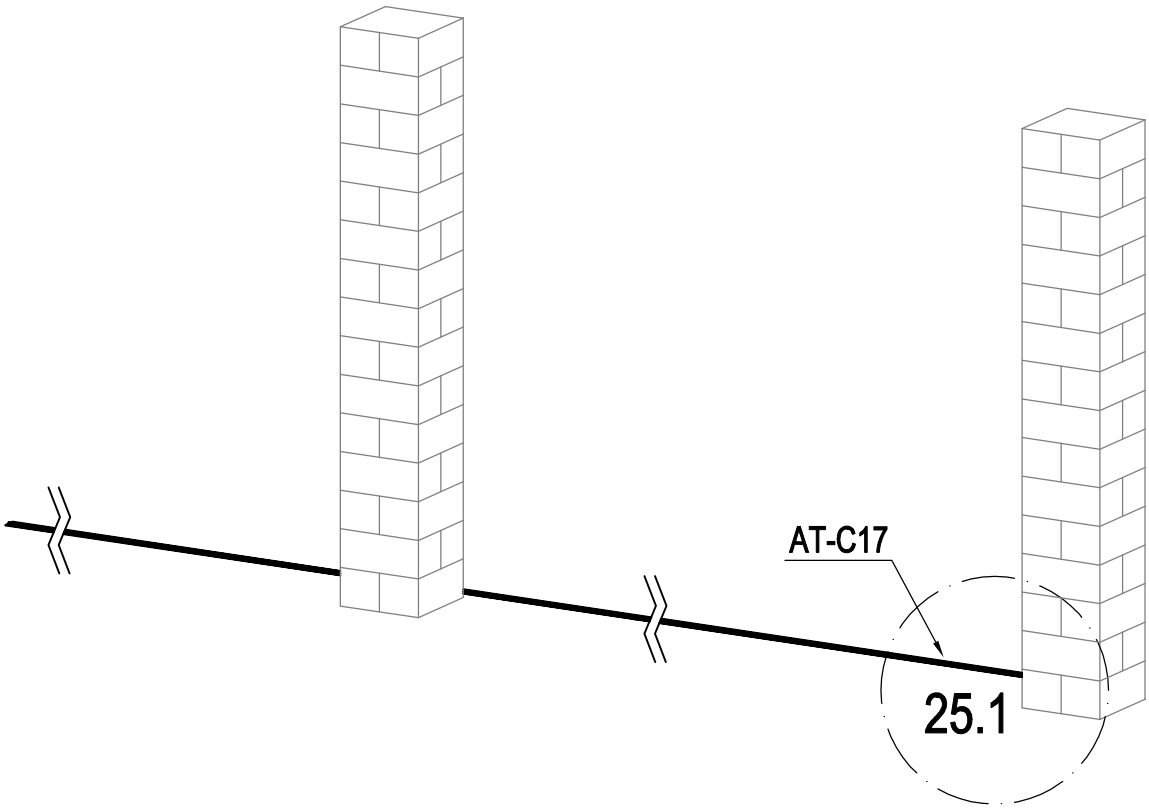

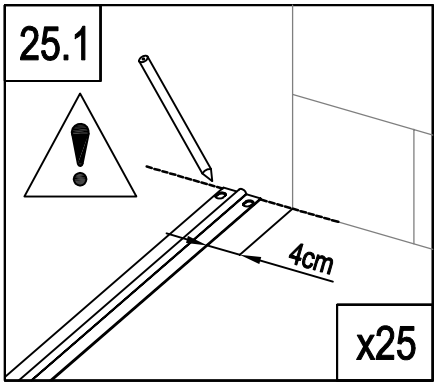

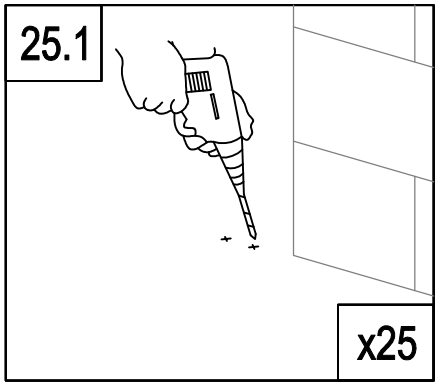

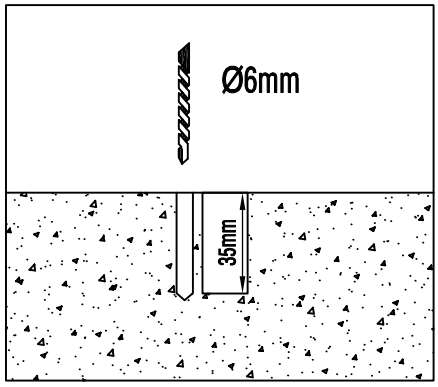

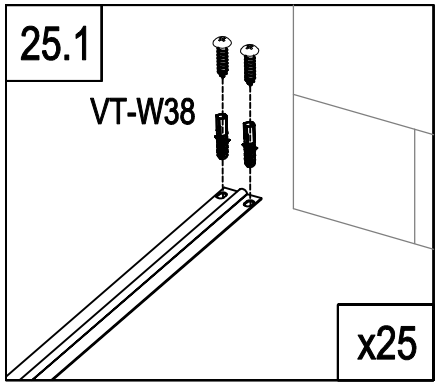

	AT-C17	5
	VT-W38	50

R

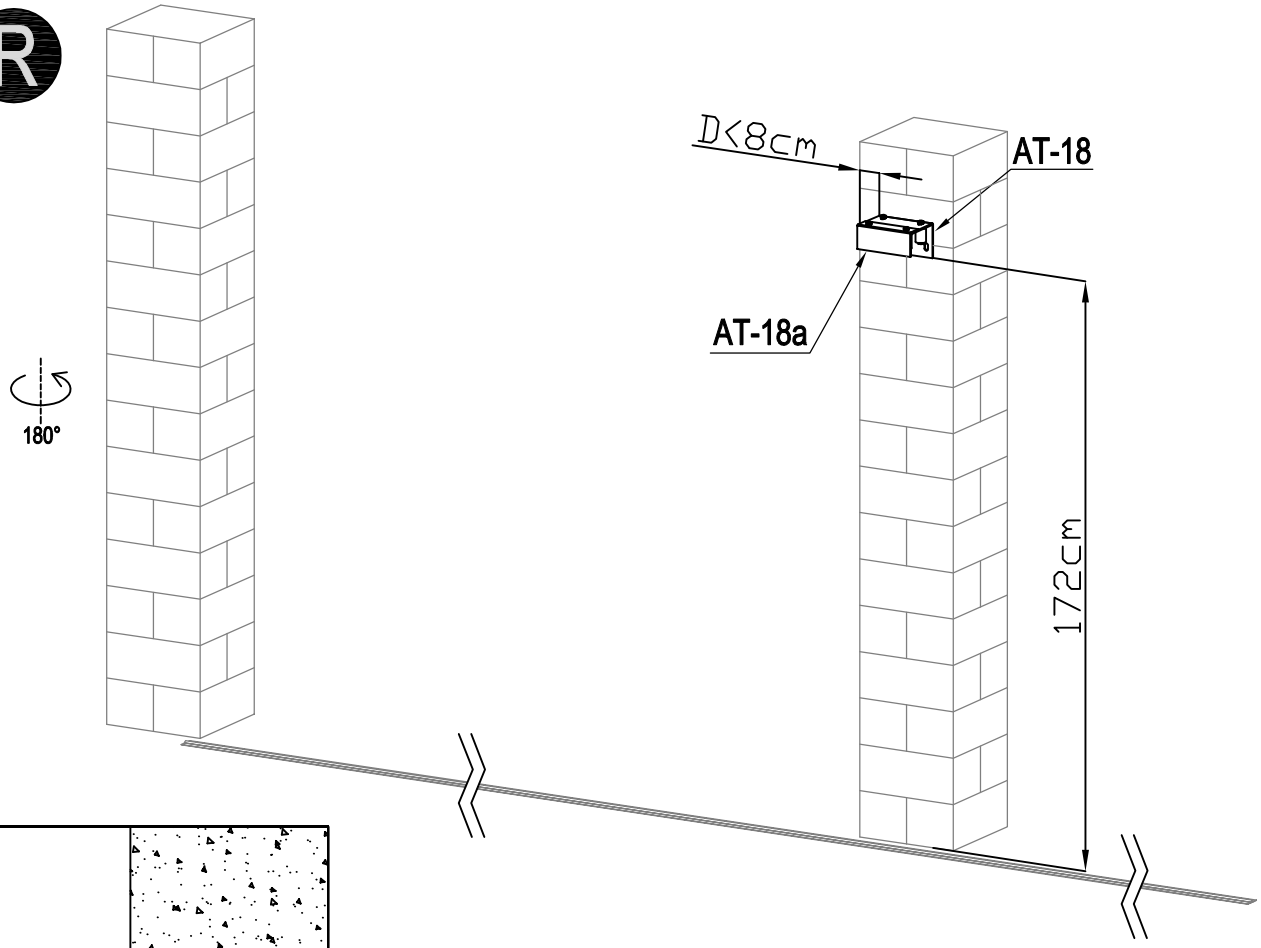

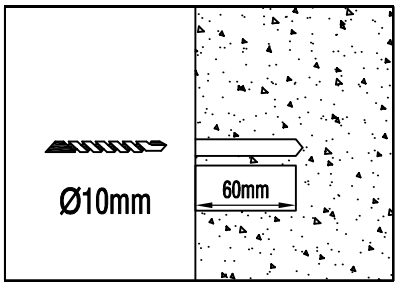

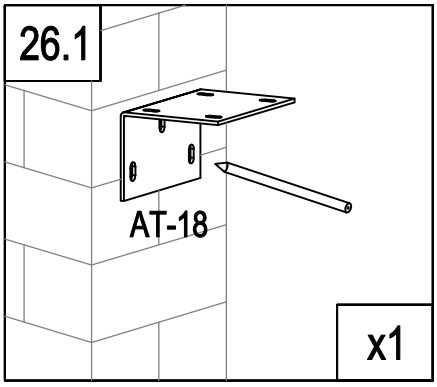

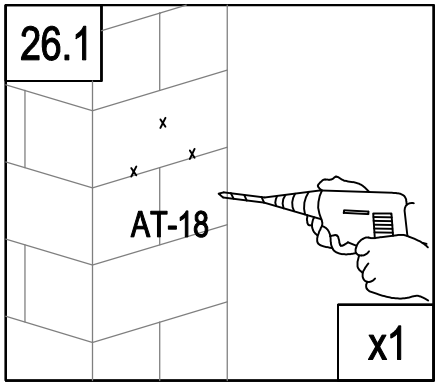

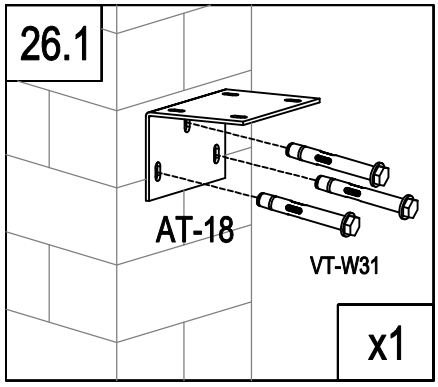

	AT-18	1
	AT-18a	1
	AT-20	4
	VT-W31	3

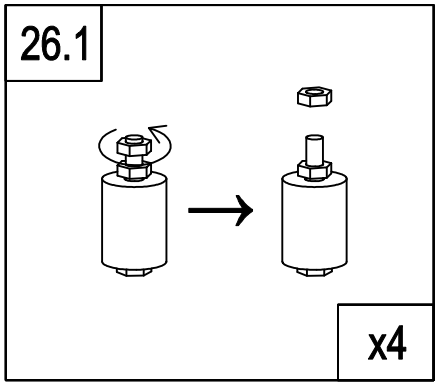

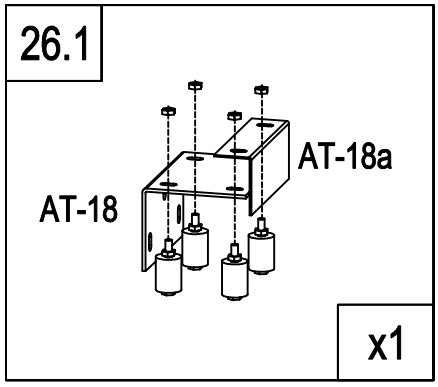

R

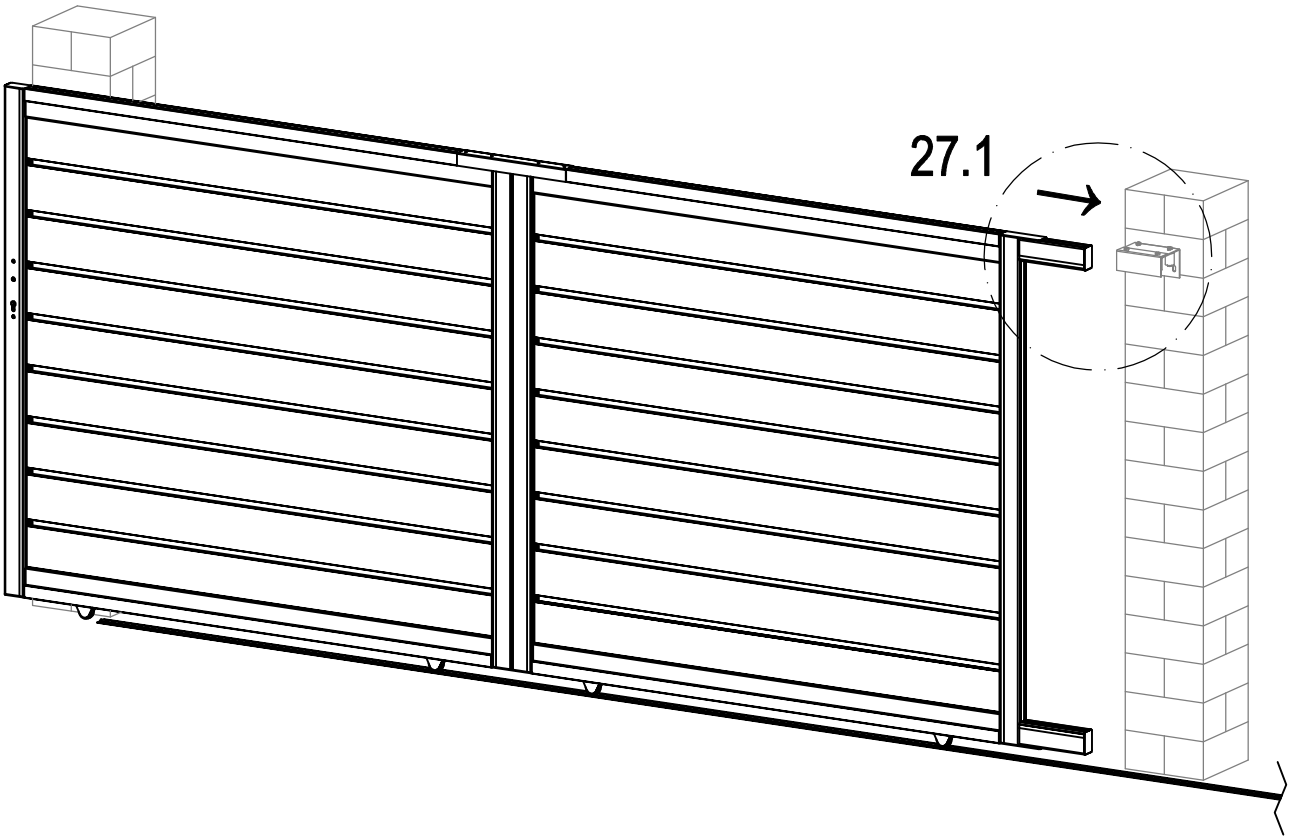

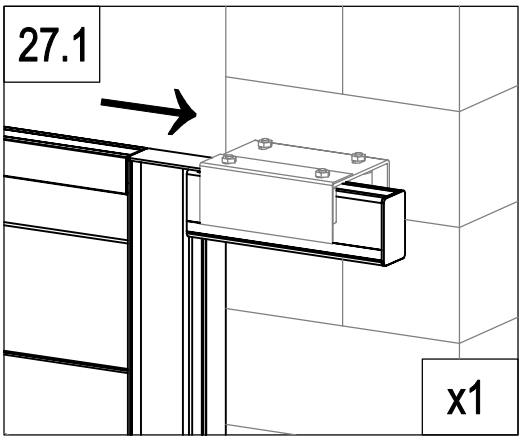

R

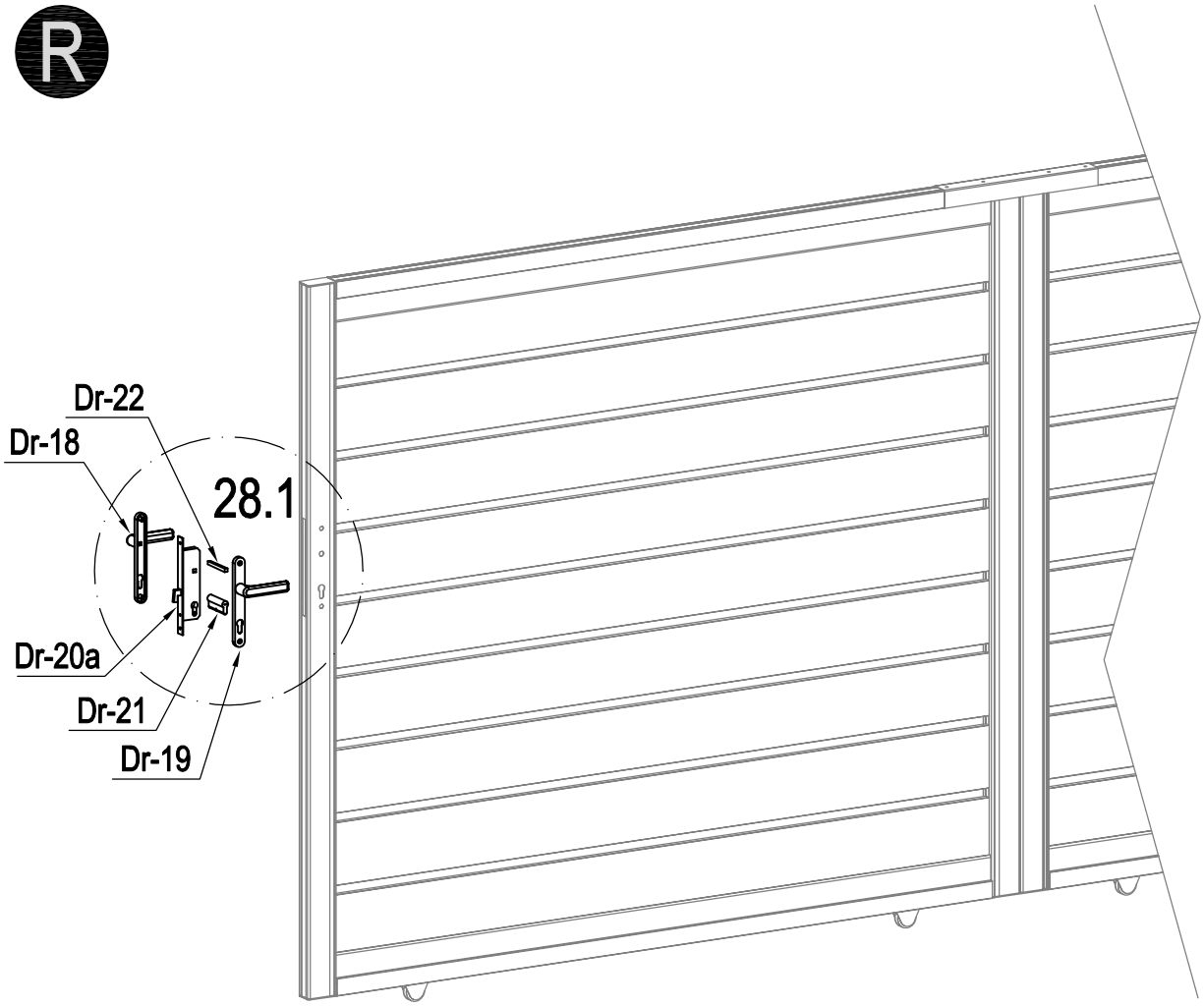

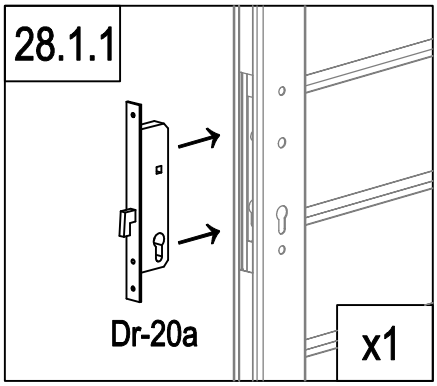

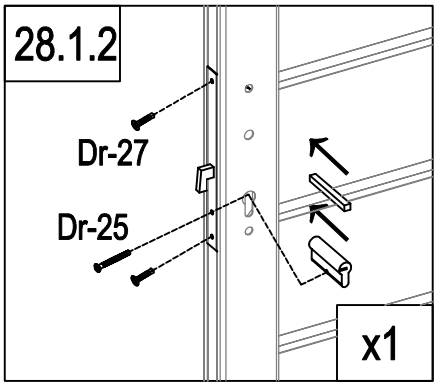

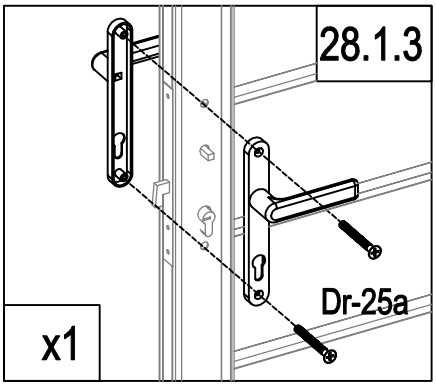

	Dr-20a	1
	Dr-21	1
	Dr-22	1
	Dr-25	1

	Dr-18	1
	Dr-19	1
	Dr-25a	2
	Dr-27	2

R

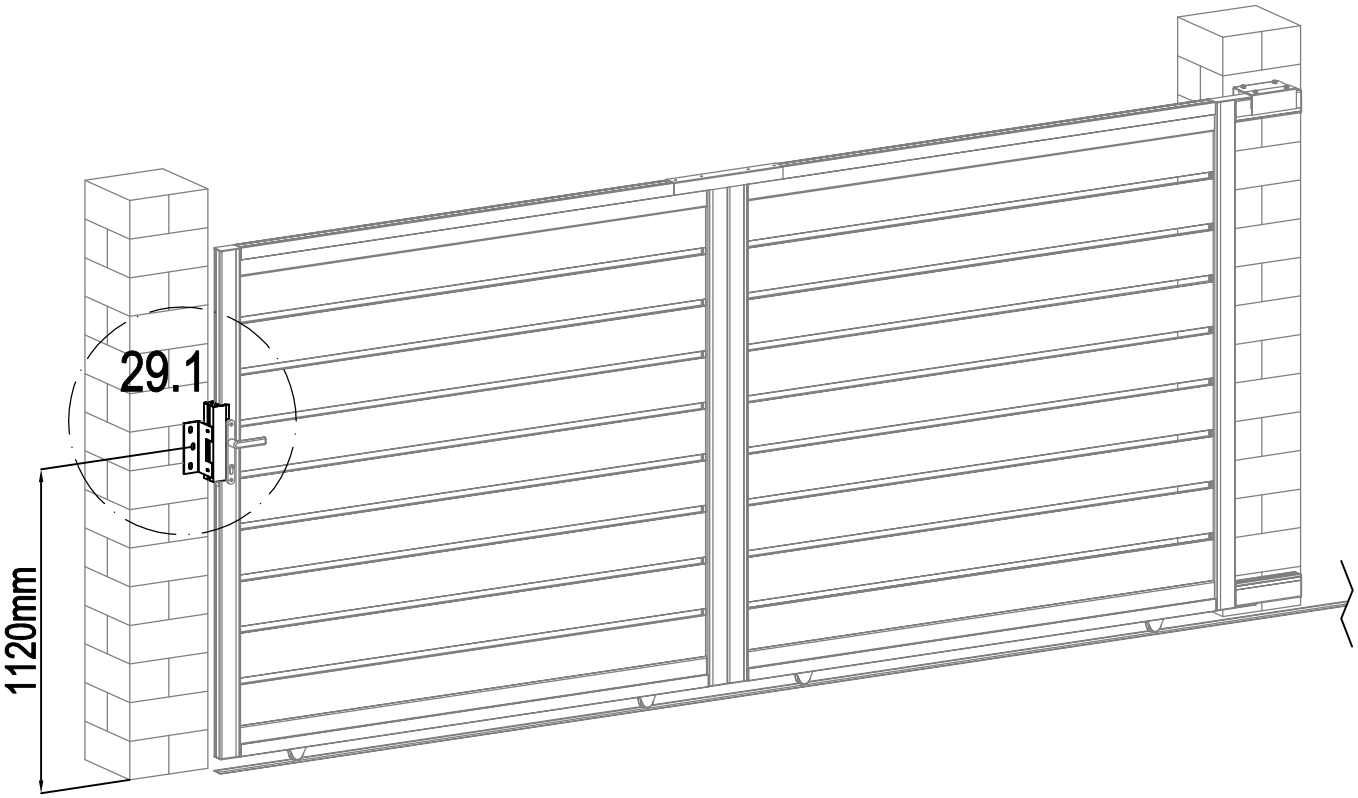

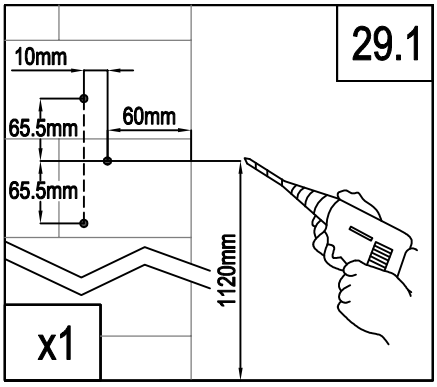

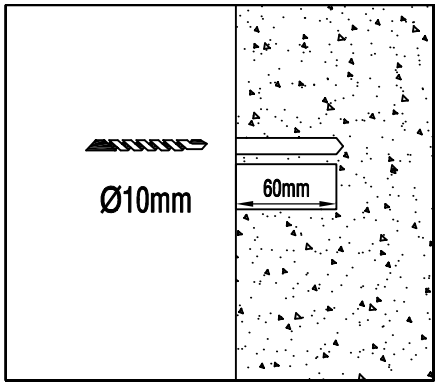

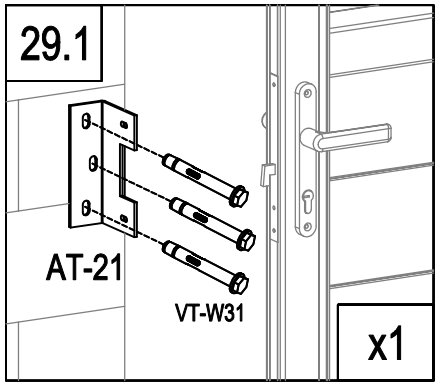

	AT-16	1
	AT-21	1
	VT-W36	2
	VT-W31	3
	AT-22J	3

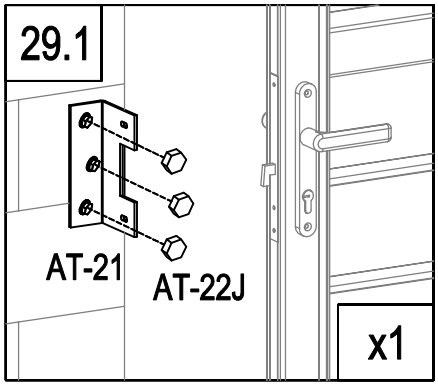

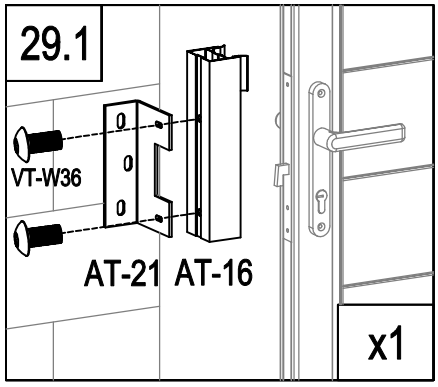

R

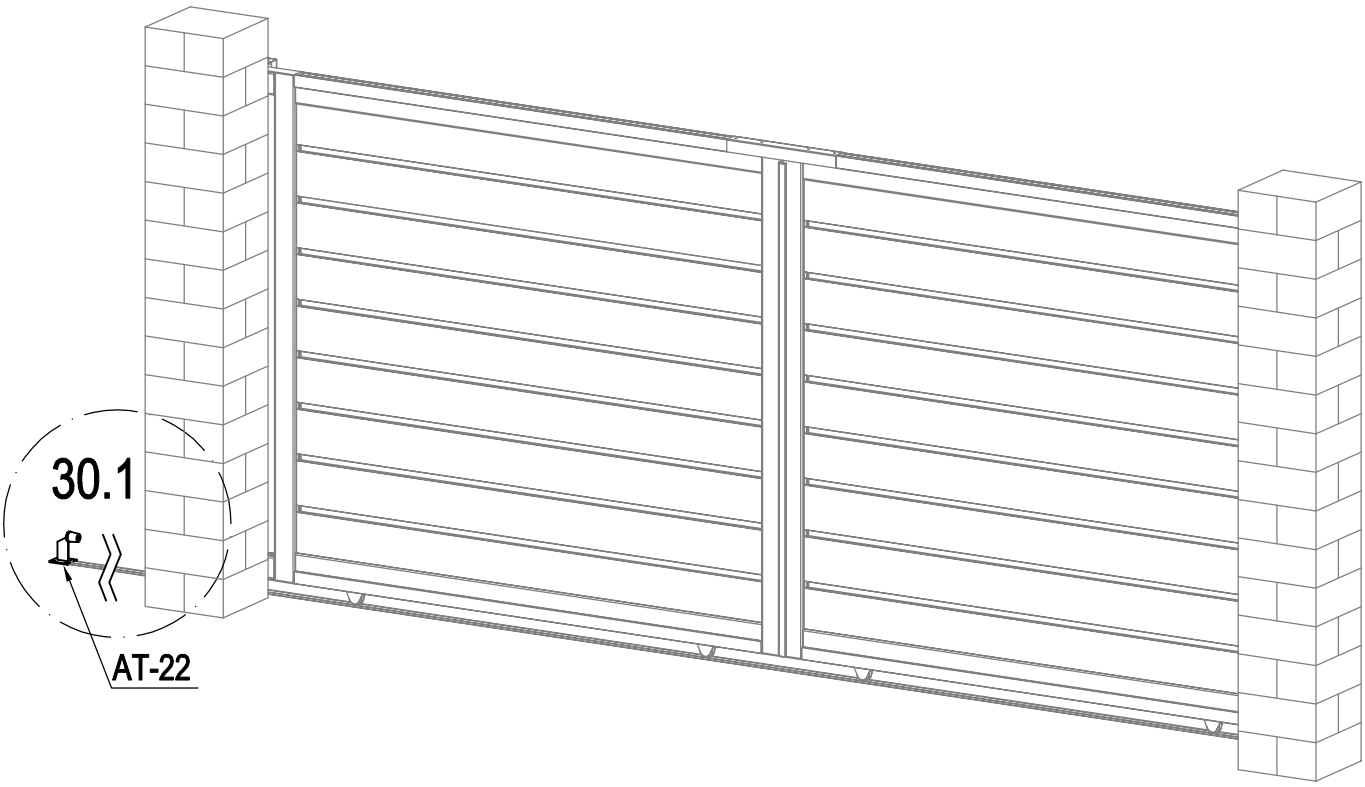

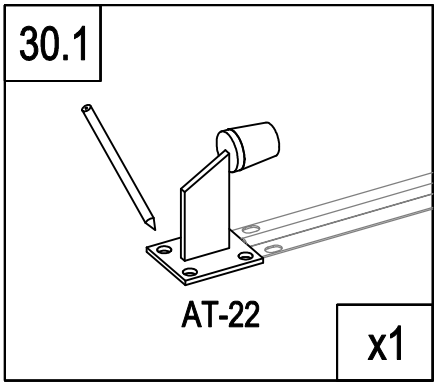

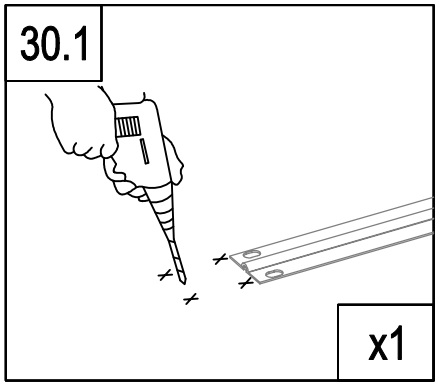

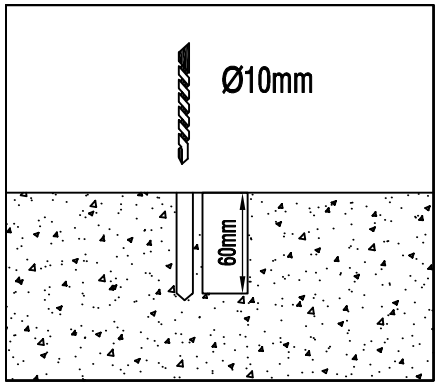
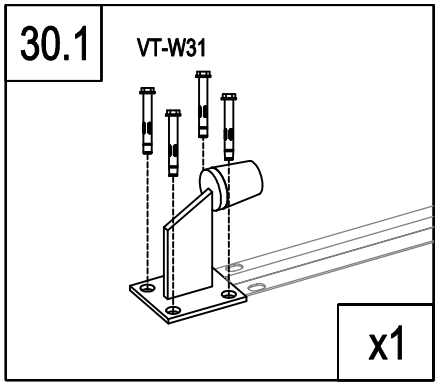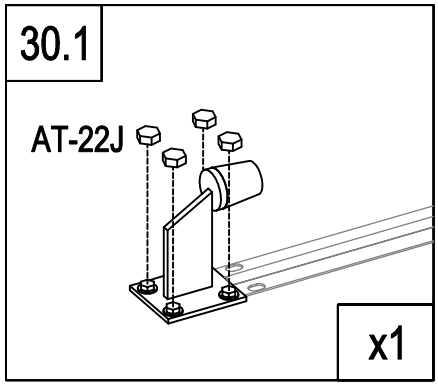
	AT-22	1
	VT-W31	4
	AT-22J	4