CASANOOV

RAZO 300B180

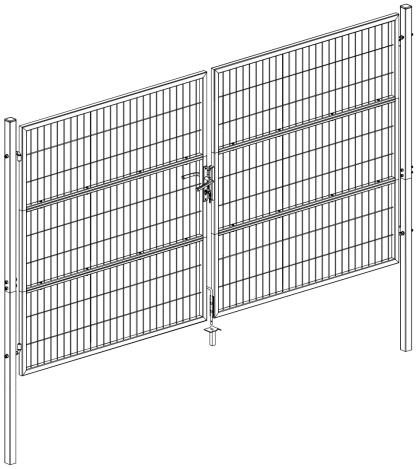

COM-000630 [x1] COM-000631 [x1]	COM-000632 [x1]

2H

X 2

EN FR DE ES PT IT NL PL FI SE DK CE

INSTRUCTION MANUAL / NOTICE DE MONTAGE / MONTAGEANLEITUNG / MANUAL DE MONTAJE / MANUAL DE MONTAGEM / MANUALE DI MONTAGGIO / MONTAGEHANDLEIDING / NSTRUKCJA MONTAŻU / KÄYTTÖOHJEET / BRUKSANVISNING / BRUGSANVISNING

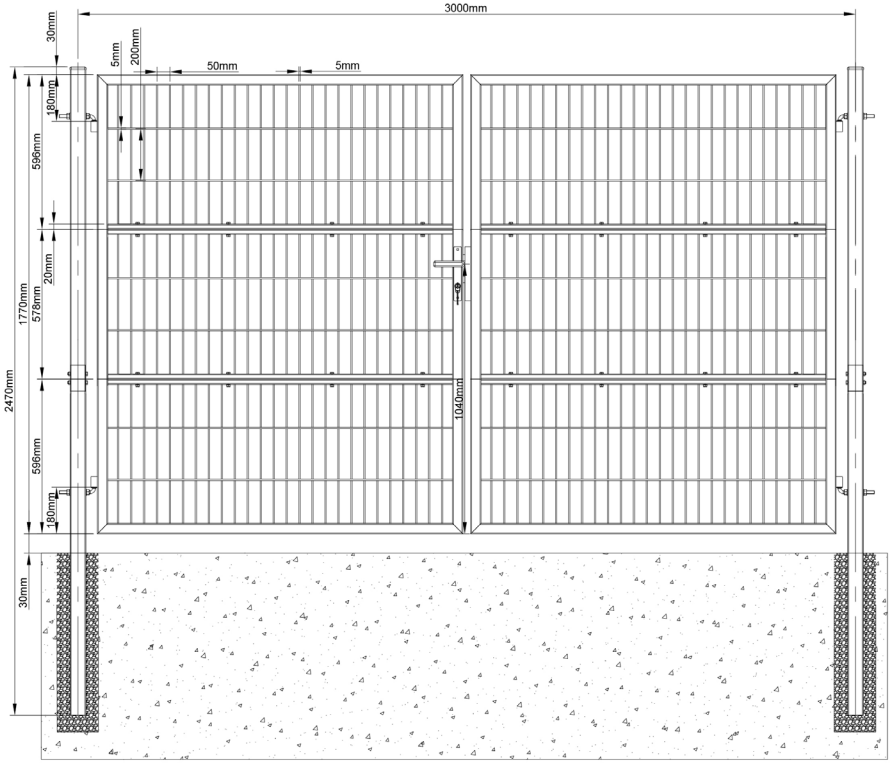
30mm
180mm
596mm
20mm
578mm
596mm
180mm
30mm
2470mm
1770mm
3000mm
200mm
5mm
50mm
5mm
1040mm

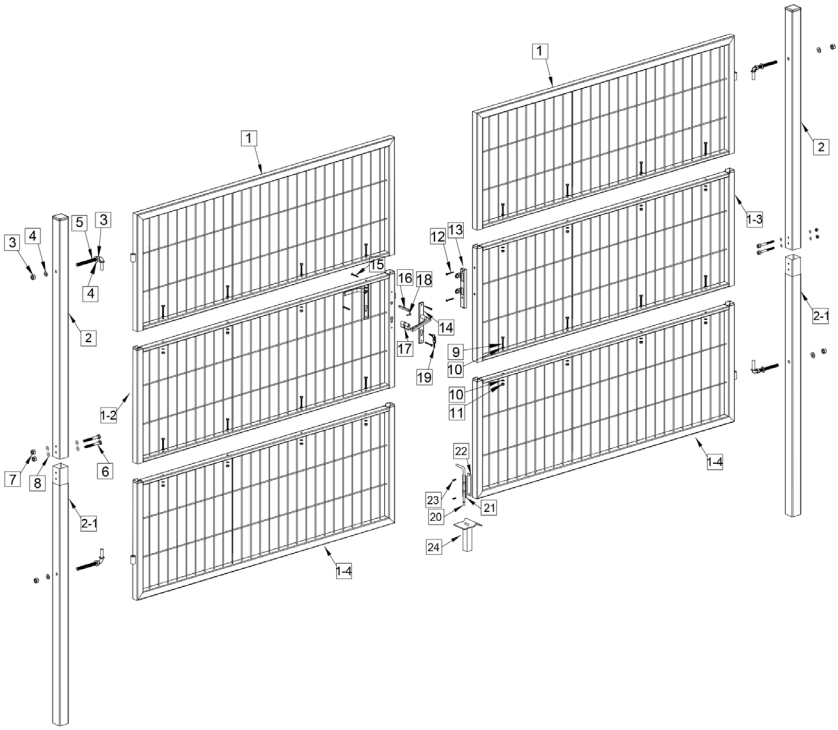
1
1
2
1-3
2-1
1-4
1-4
1-2
2
2-1
3
4
5
3
4
3
6
7
8
12
13
15
16
18
14
17
19
9
10
10
11
22
23
20
21
24

PICTURES	REF-PCS	SIZE	QUANTITY
	1	1410×596mm	2
	1-2	1410×588mm	1
	1-3	1410×588mm	1
	1-4	1410×606mm	2
	2	60×60×1285mm	2
	2-1	60×60×1285mm	2
	3	20×10mm	8
	4	24×1mm	8
	5	12×120mm	4
	6	10×70mm	4
	7	20×7mm	4
	8	20×1mm	8
	9	8×55mm	16
	10	17×1mm	32
	11	15×5mm	16
	12	6×35mm	2
	13	30×210mm	1
	14	30×210mm	2
	15	4×20mm	4
	16	8×8×110mm	1
	17	33×60mm	1
	18	5×30mm	1
	19	22×45mm	3
	20	12×245mm	1
	21	23×140mm	1
	22	23×140mm	1
	23	6×20mm	2
	24	60×95×145mm	1

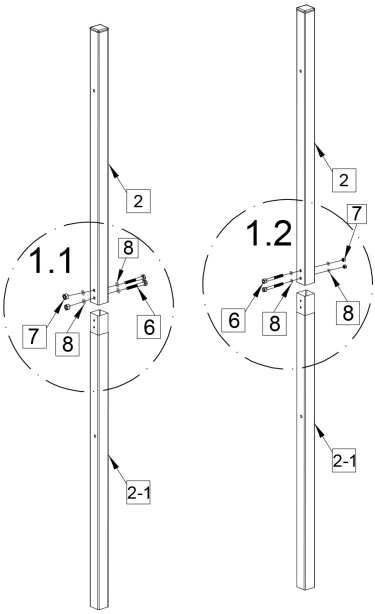

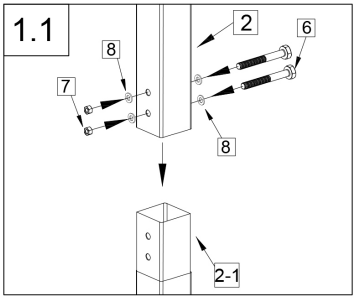

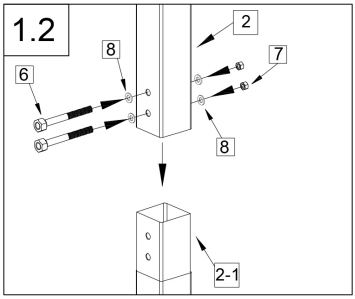

Thumbnails	No.	Size	Quantity
	6	10×70mm	4
	7	20×7mm	4
	8	20×1mm	8

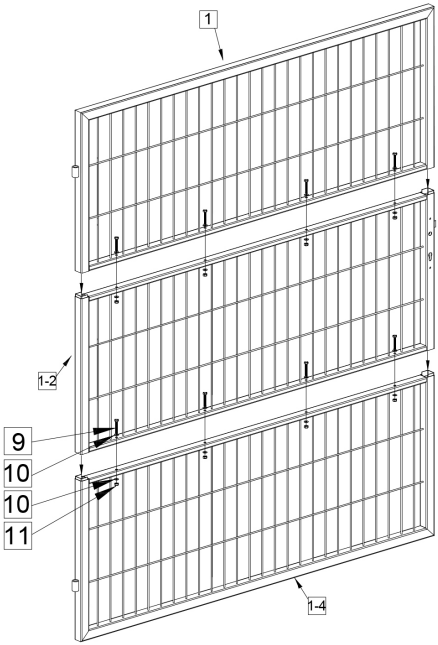

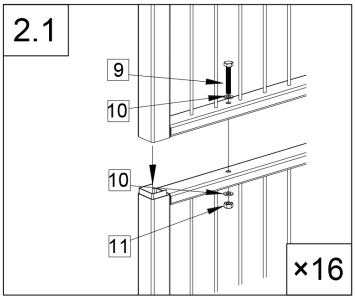

Thumbnails	No.	Size	Quantity
	9	8×55mm	16
	10	17×1mm	32
	11	15×5mm	16

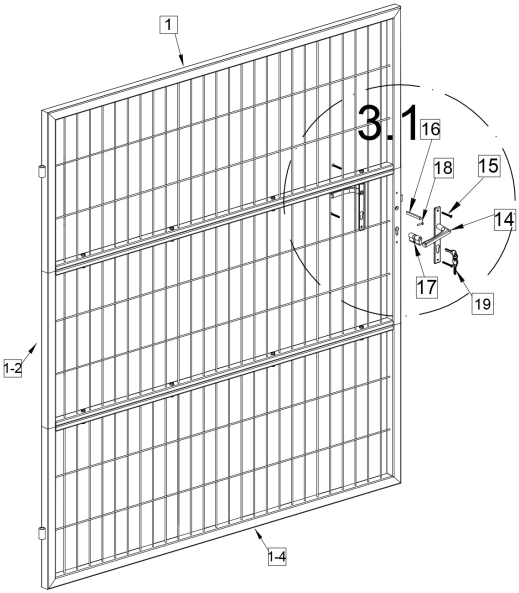

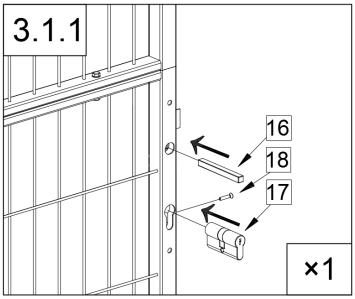

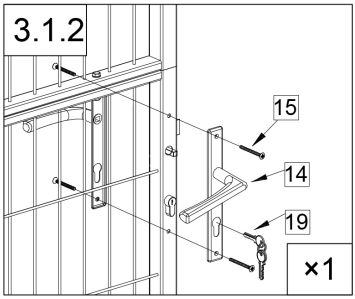

Thumbnails	No.	Size	Quantity
	16	8×8×110mm	1
	17	33×60mm	1
	18	5×30mm	1

Thumbnails	No.	Size	Quantity
	14	30×210mm	2
	15	4×20mm	4
	19	22×45mm	3

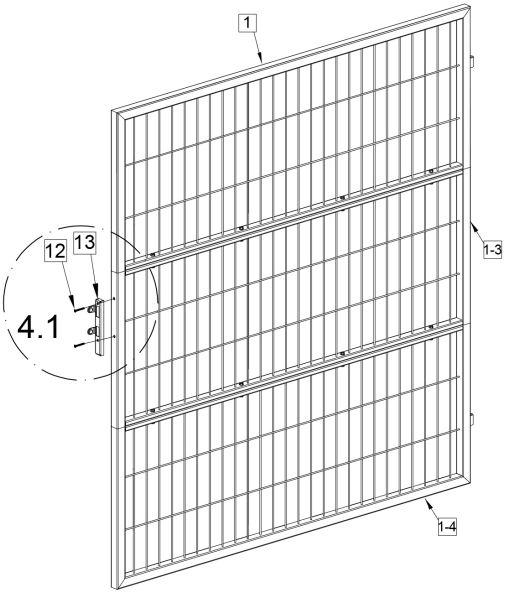

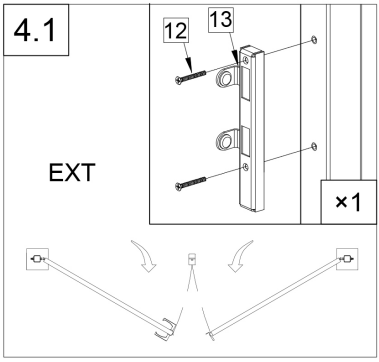

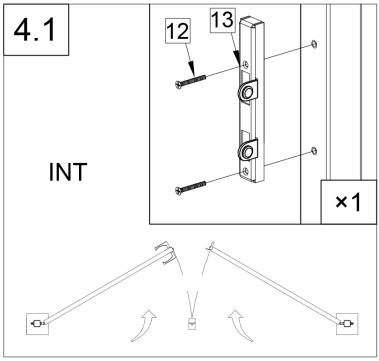

Thumbnails	No.	Size	Quantity
	12	6×35mm	2
	13	30×210mm	1

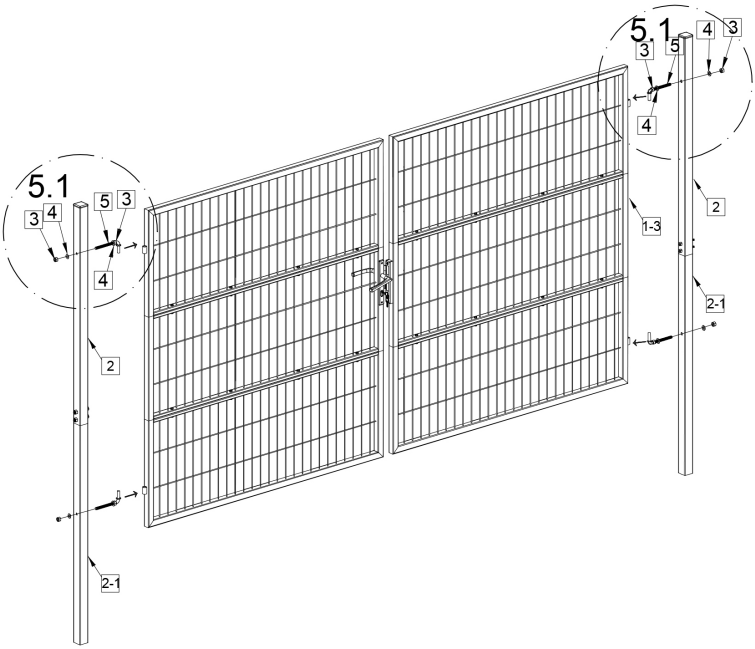

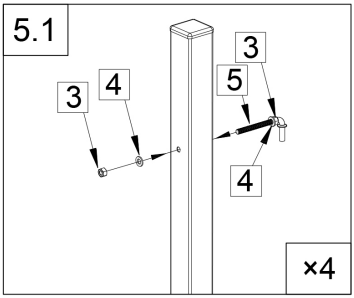

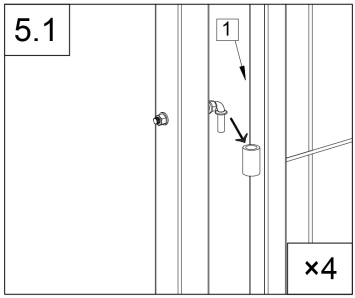

Thumbnails	No.	Size	Quantity
	3	20×10mm	8
	4	24×1mm	8
	5	12×120mm	4

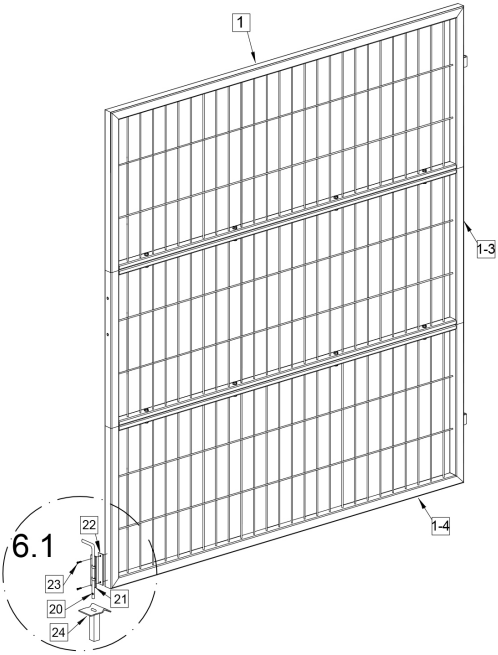

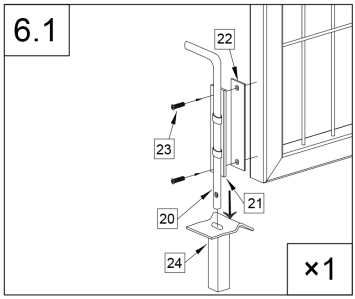

Thumbnails	No.	Size	Quantity
	20	12×245mm	1
	21	23×140mm	1
	22	23×140mm	1
	23	6×20mm	2
	24	60×95×145mm	1

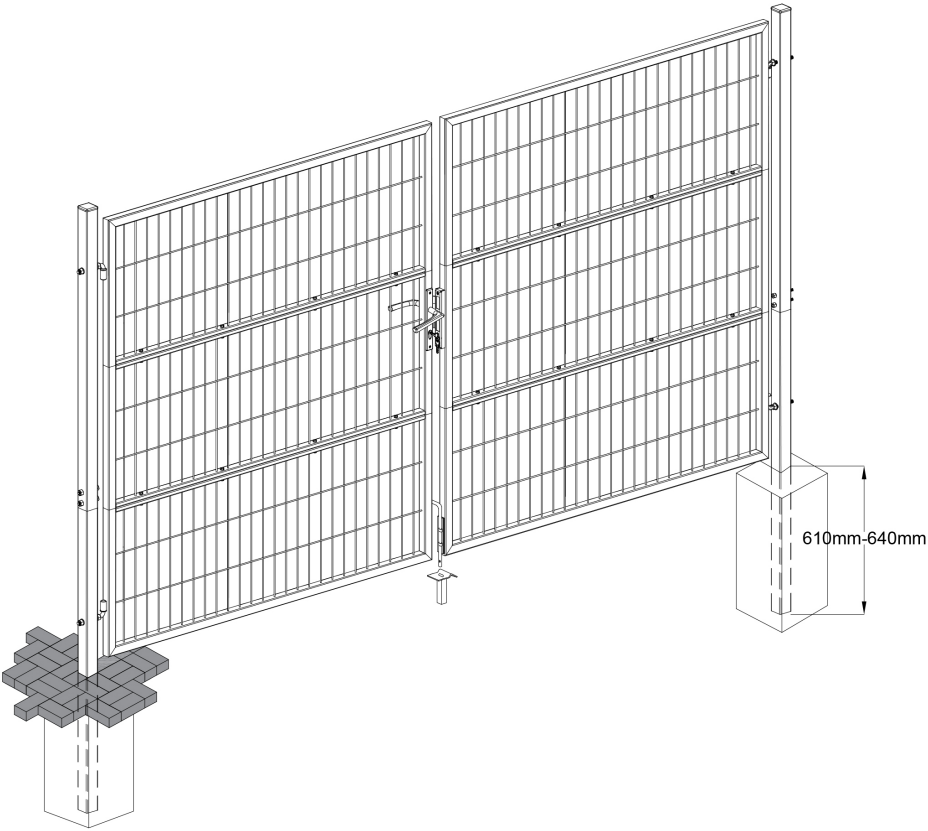
610mm-640mm