MAUI

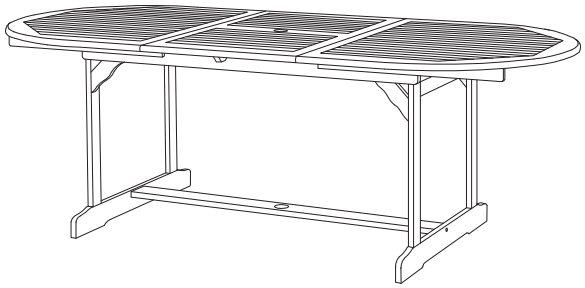

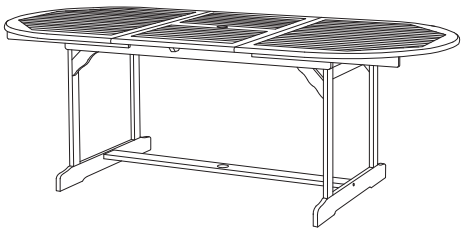

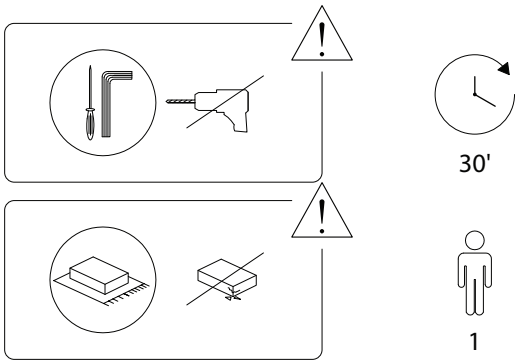

1/4

507/MAUI/240625/

A	B	C	D
x 1	x 2	x 4	x 1

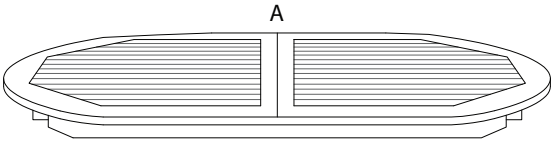

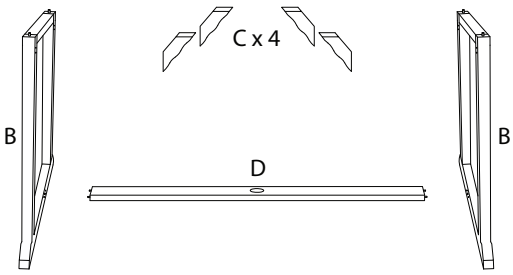

E	F	G	H
M6 x 60		M4 x 30	
x 6	x 2	x 16	x 1

2/4

507/MAUI/240625/

!

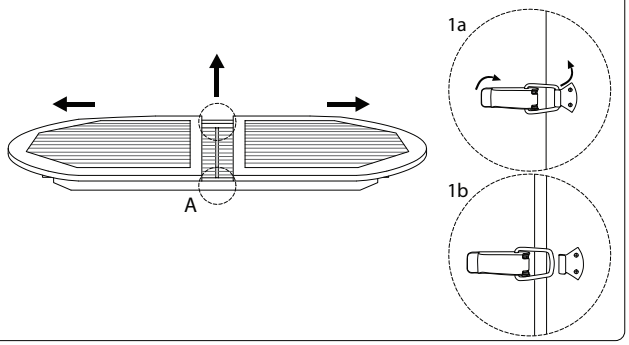

1

B	D	E	F	H
		M6 x 60		
x 2	x 1	x 2	x 2	x 1

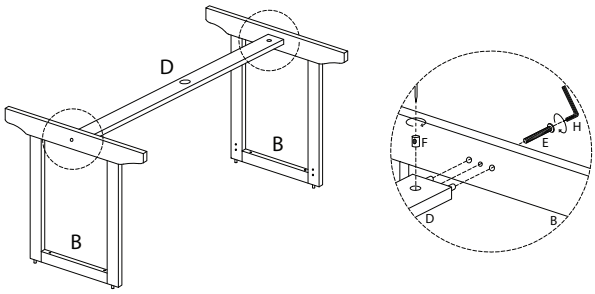

3/4

507/MAUI/240625/

2

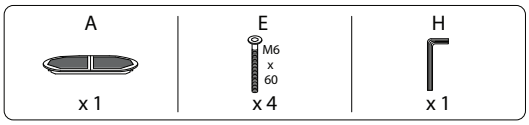

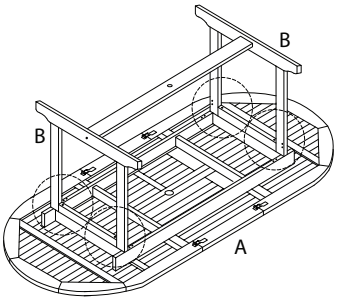

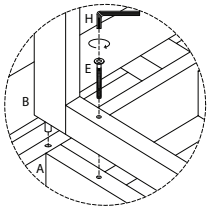

3

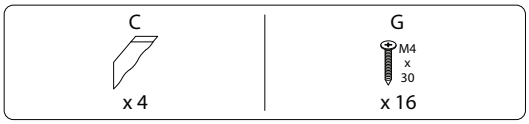

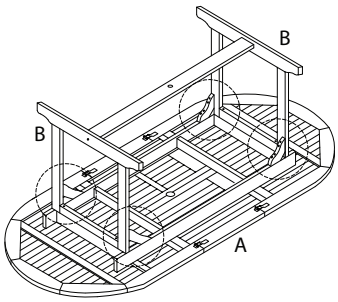

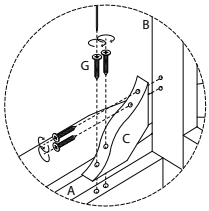

507/MAUI/240625/