CASANOOV

CARPATIA 100P180

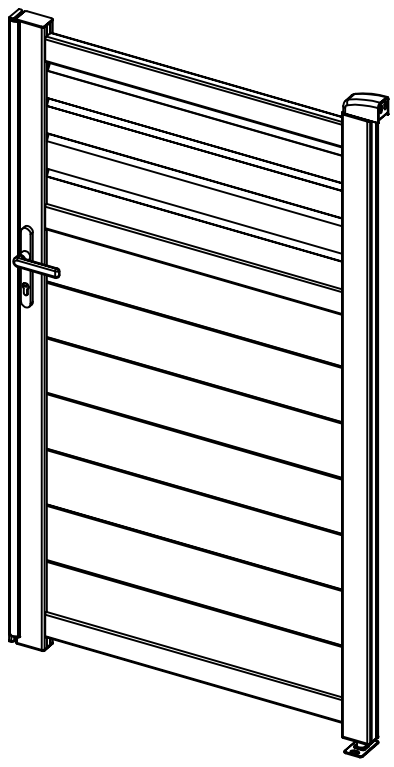

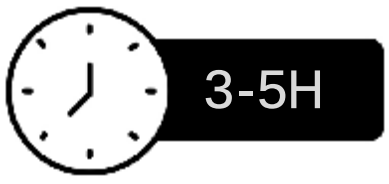

STI-000008 [x1]

FR EN ES DE IT NL PL CE

NOTICE DE MONTAGE / INSTRUCTION MANUAL / MANUAL DE MONTAJE / MONTAGEANLEITUNG / MANUALE DI MONTAGGIO / MONTAGEHANDLEIDING / INSTRUKCJA MONTAŻU

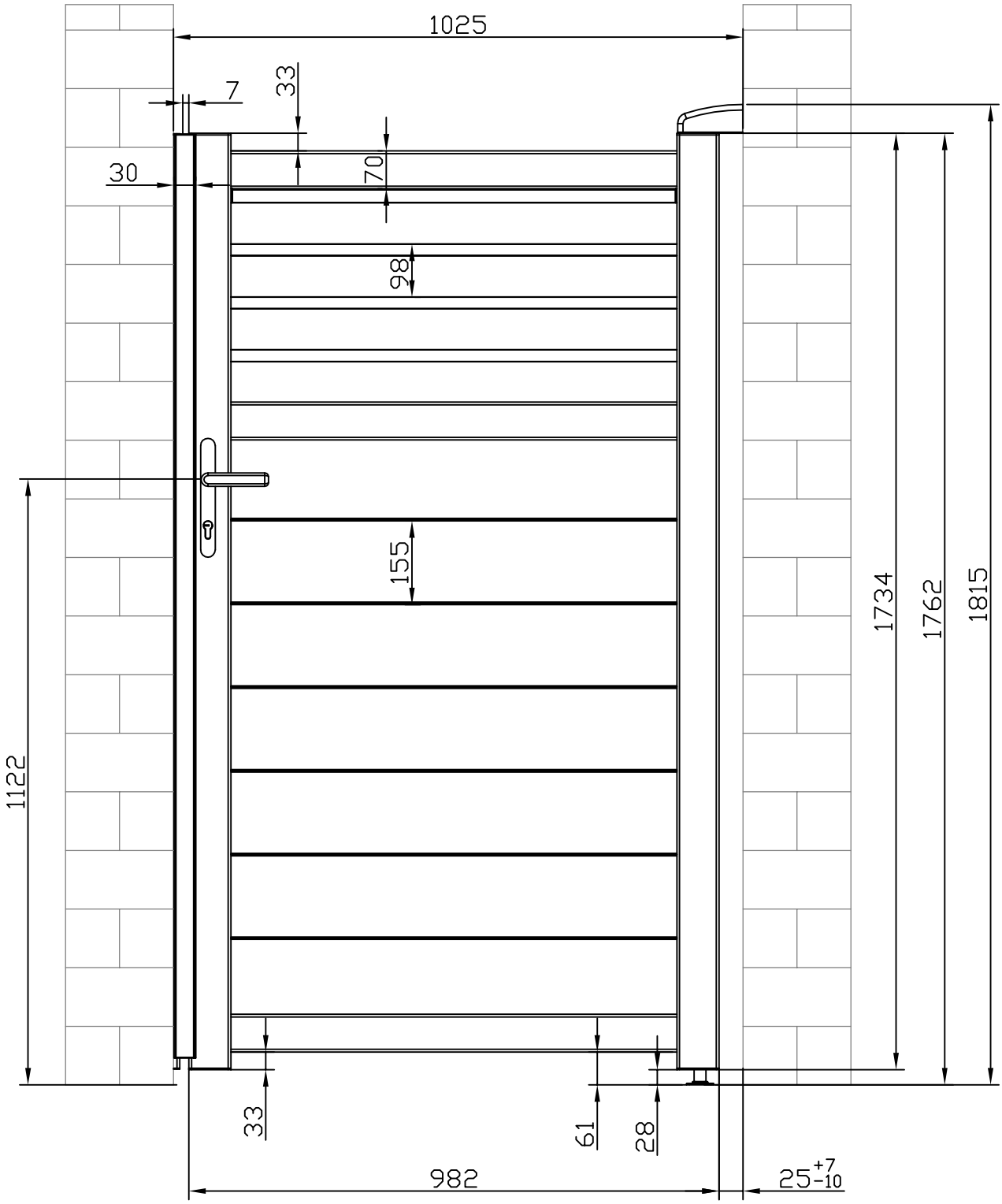
1025
7
33
30
70
98
155
1122
1734
1762
1815
33
61
28
982
25+7-10

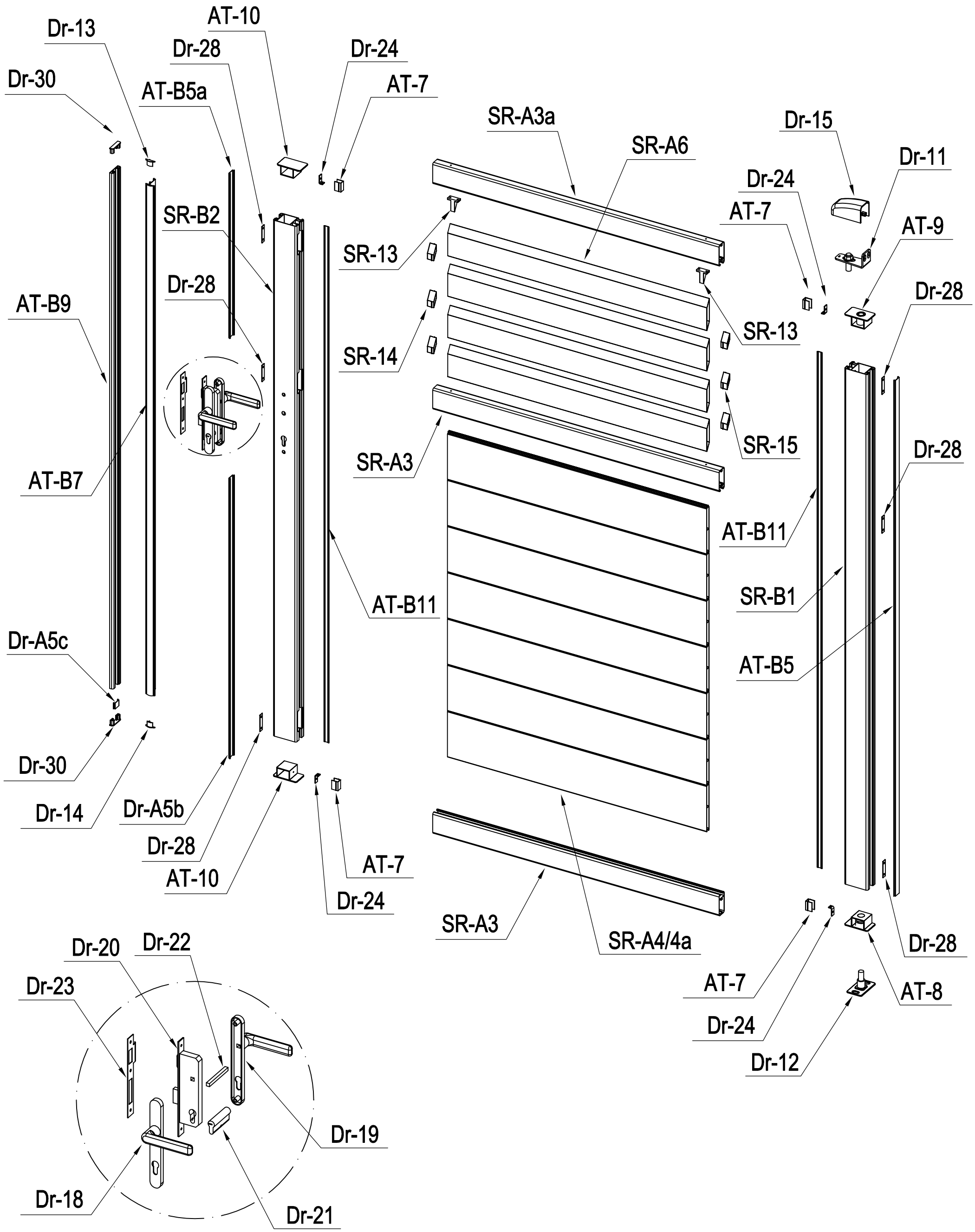
Dr-13
AT-10
Dr-28
Dr-24
Dr-30
AT-B5a
AT-7
SR-A3a
SR-A6
Dr-15
Dr-11
Dr-24
AT-7
AT-9
SR-B2
SR-13
Dr-28
AT-B9
Dr-28
SR-13
SR-14
SR-15
Dr-28
AT-B7
SR-A3
AT-B11
AT-B11
SR-B1
Dr-A5c
AT-B5
Dr-30
Dr-14
Dr-A5b
Dr-28
AT-10
AT-7
Dr-24
SR-A3
SR-A4/4a
Dr-28
AT-7
AT-8
Dr-24
Dr-12
Dr-20
Dr-22
Dr-23
Dr-19
Dr-18
Dr-21

PART LIST

IMAGE	NO.	L.(mm)	QTY
	SR-B1	1728	1
	SR-B2	1728	1
	AT-B9	1728	1
	SR-A3	959	2
	SR-A3a	959	1
	SR-A4	868	6
	SR-A4a (+SR-A15)	868	1
	SR-A6	868	4
	AT-B5	1728	1
	AT-B5a	550.5	1
	Dr-A5b	937	1
	Dr-A5c	19.5	1
	AT-B11	1728	2
	AT-7	29.5	4
	AT-B7	1708	1
	AT-8		1
	AT-9		1
	AT-10		2
	Dr-11		1
	Dr-12		1
	Dr-13		1
	Dr-14		1
	SR-13		2

IMAGE	NO.	L.(mm)	QTY
	SR-14		3
	SR-15		3
	Dr-15		1
	Dr-17		1
	Dr-30		2
	Dr-31		2
	Dr-18		1
	Dr-19		1
	Dr-20		1
	Dr-21		1
	Dr-22		1
	Dr-23		1
	Dr-24		4
	Dr-25		1
	Dr-25a		2
	Dr-26		3
	Dr-27		2
	SR-B30		4
	SR-B31		8
	SR-B32		6
	SR-B33		12
	SR-B34		3
	SR-B35		36
	Dr-28		6

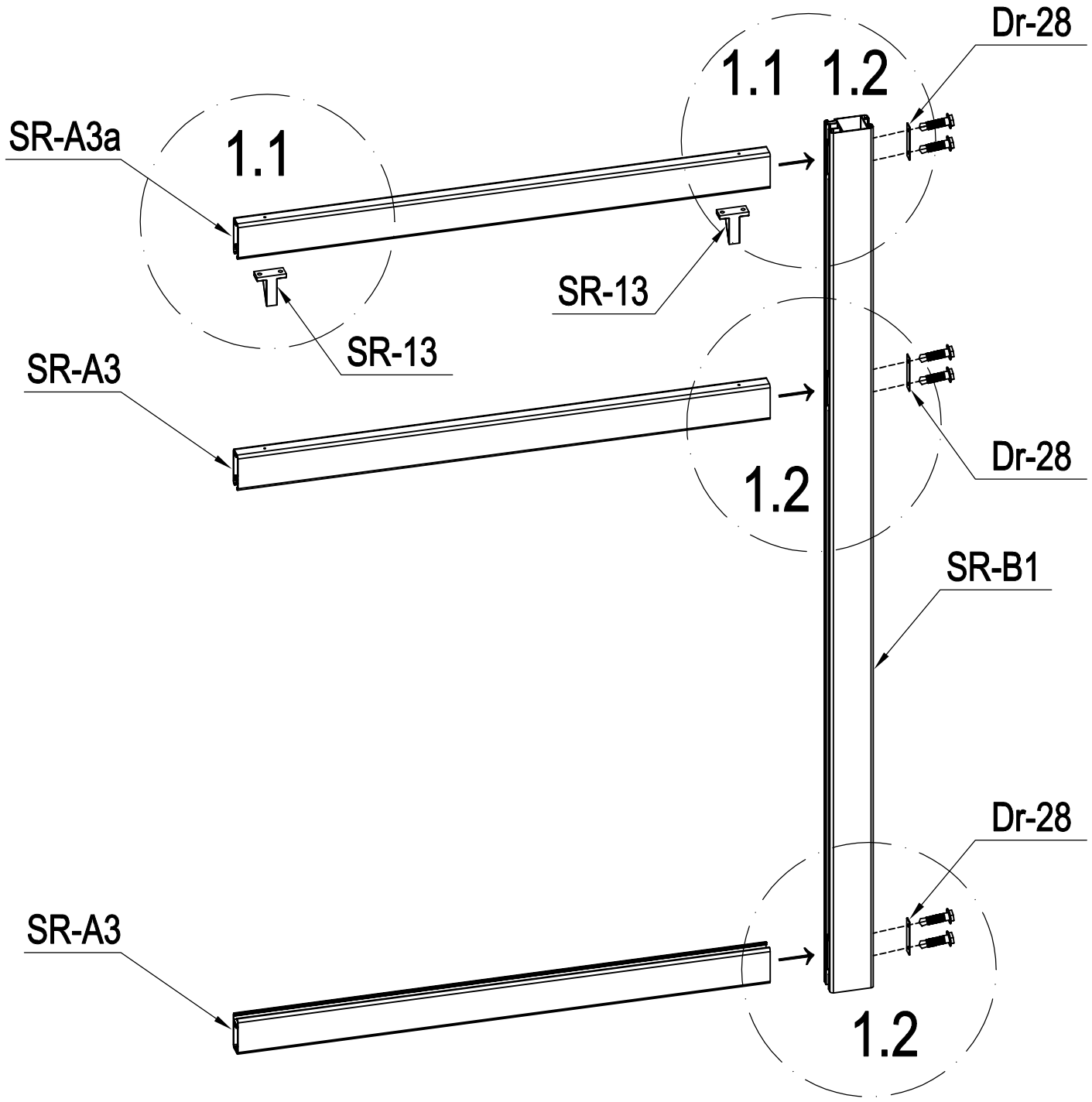

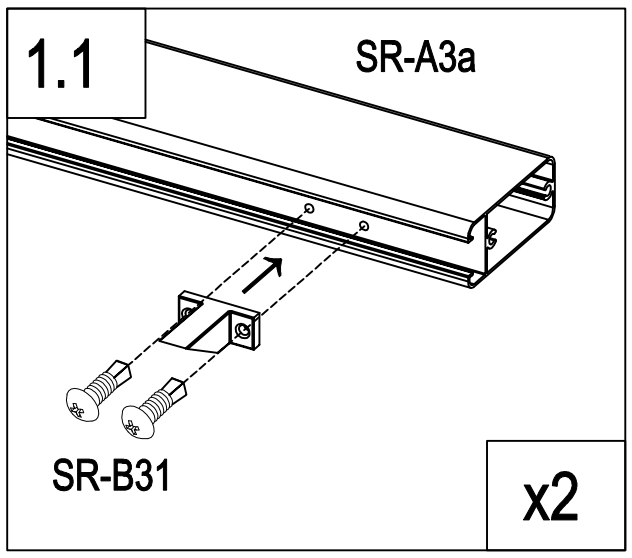

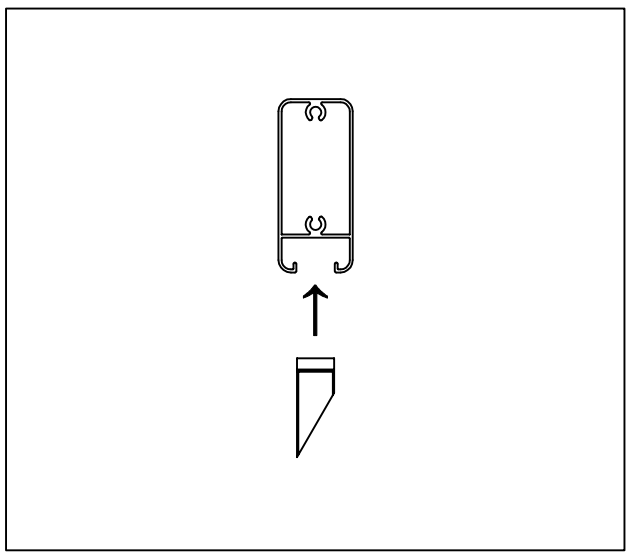

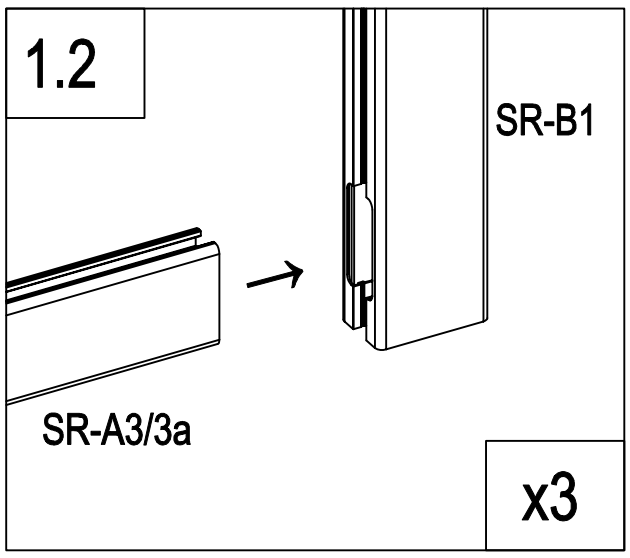

	SR-B1	1
	SR-A3	1
	SR-A3a	1
	SR-13	2

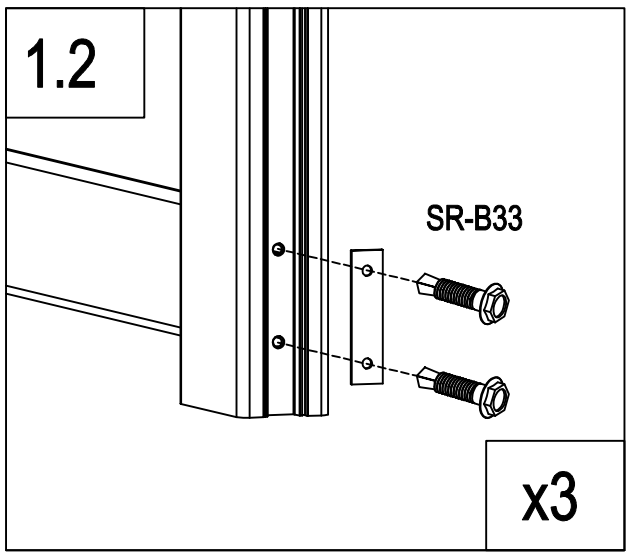

	Dr-28	3
	SR-B31	4
	SR-B33	6

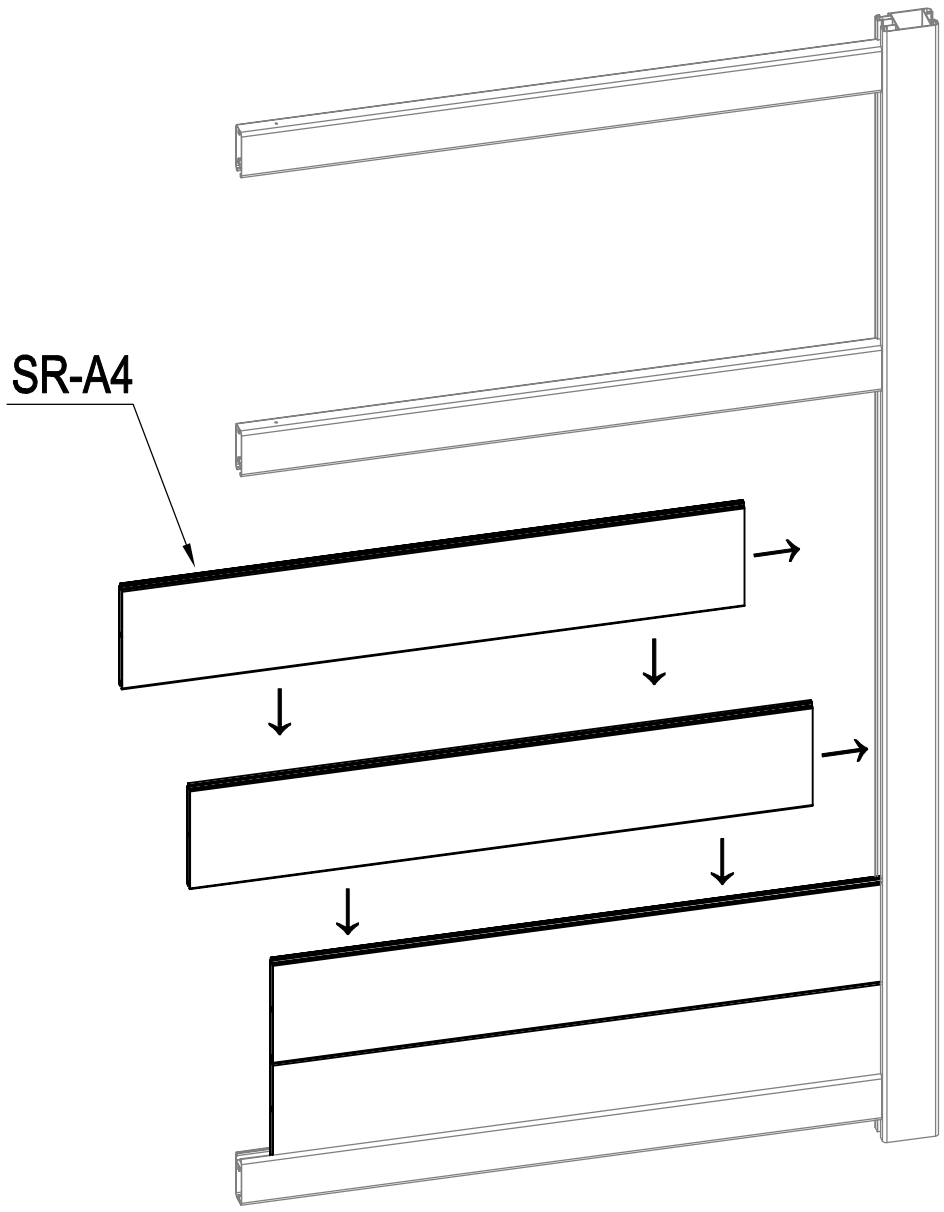

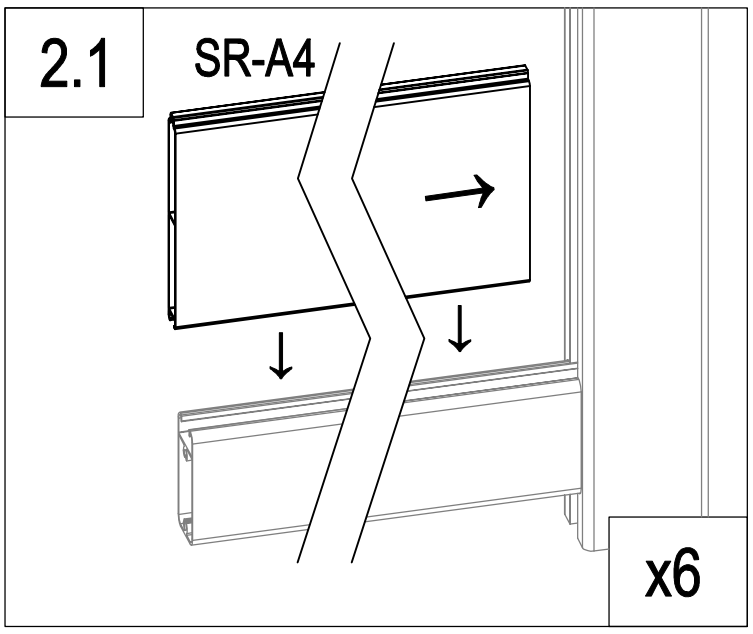

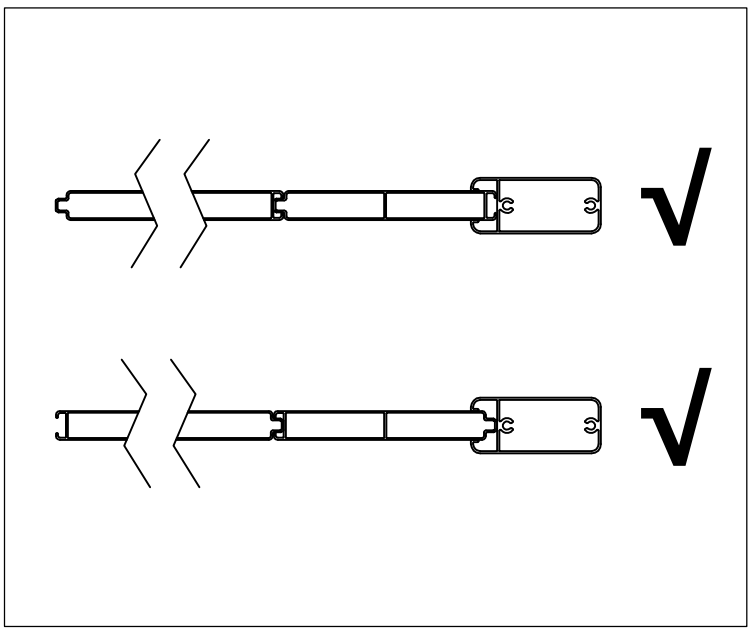

	SR-A4	6

EN: reinforced slat for automation
FR: lame renforcée pour l'automatisation
DE: verstärkte Lamelle für die Automatisierung
ES: Lámina reforzada para la automatización
PT: ripa reforçada para automatização
IT: lamella rinforzata per l'automazione
NL: versterkte lat voor automatisering
PL: wzmocniona listwa do automatyzacji

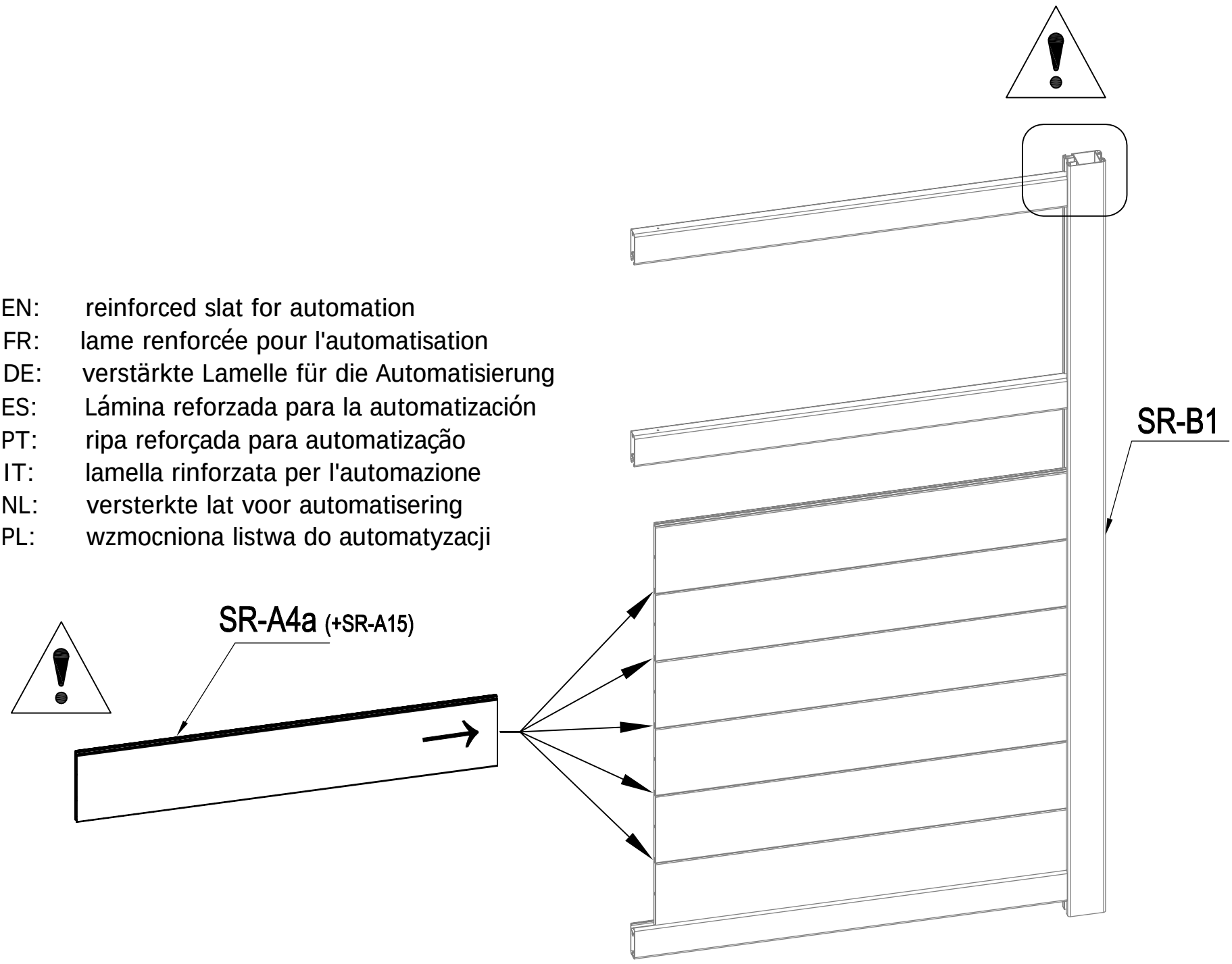

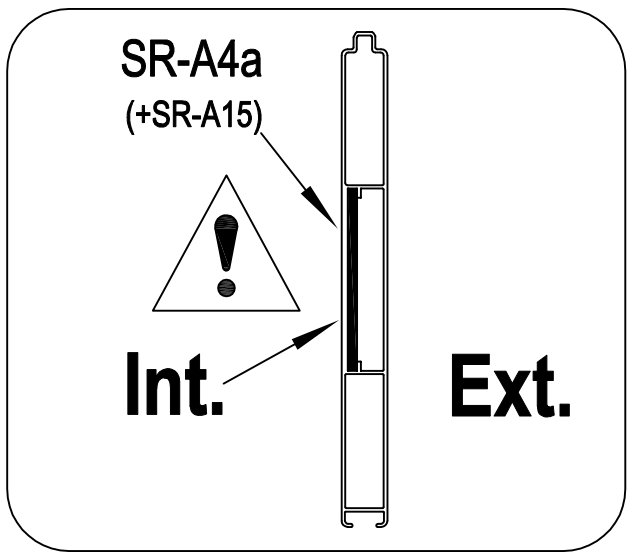

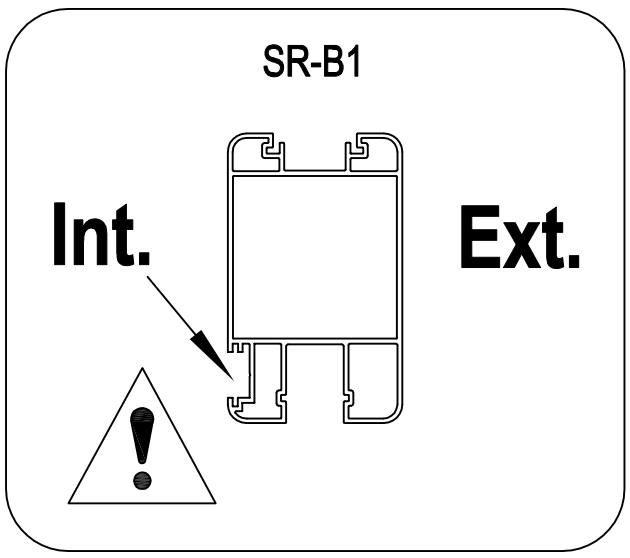

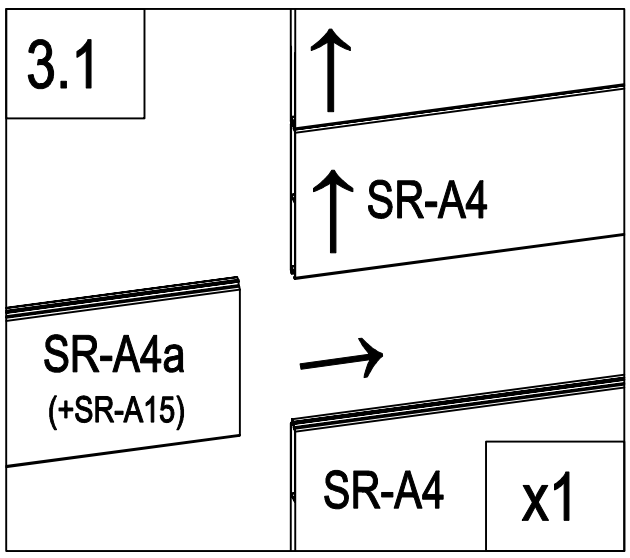

	SR-A4a (+SR-A15)	1

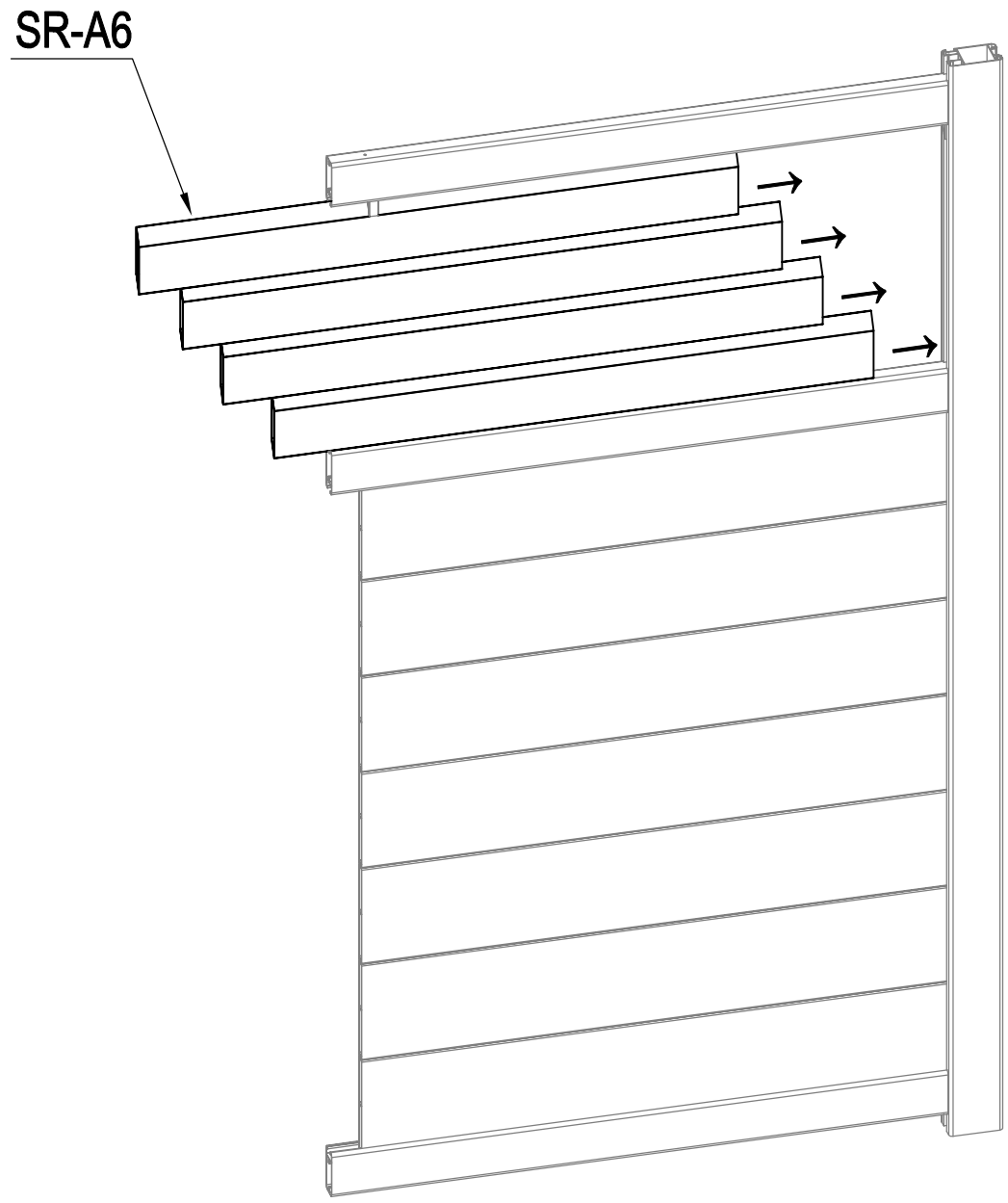

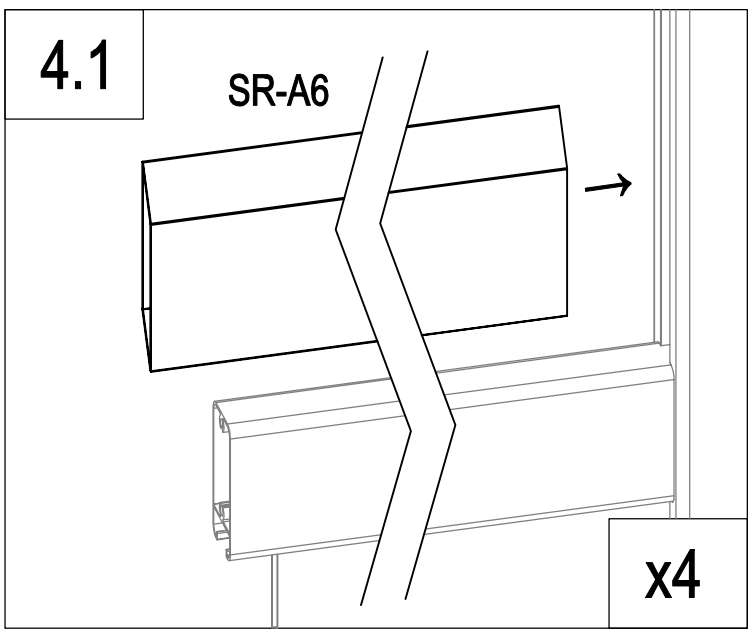

	SR-A6	4

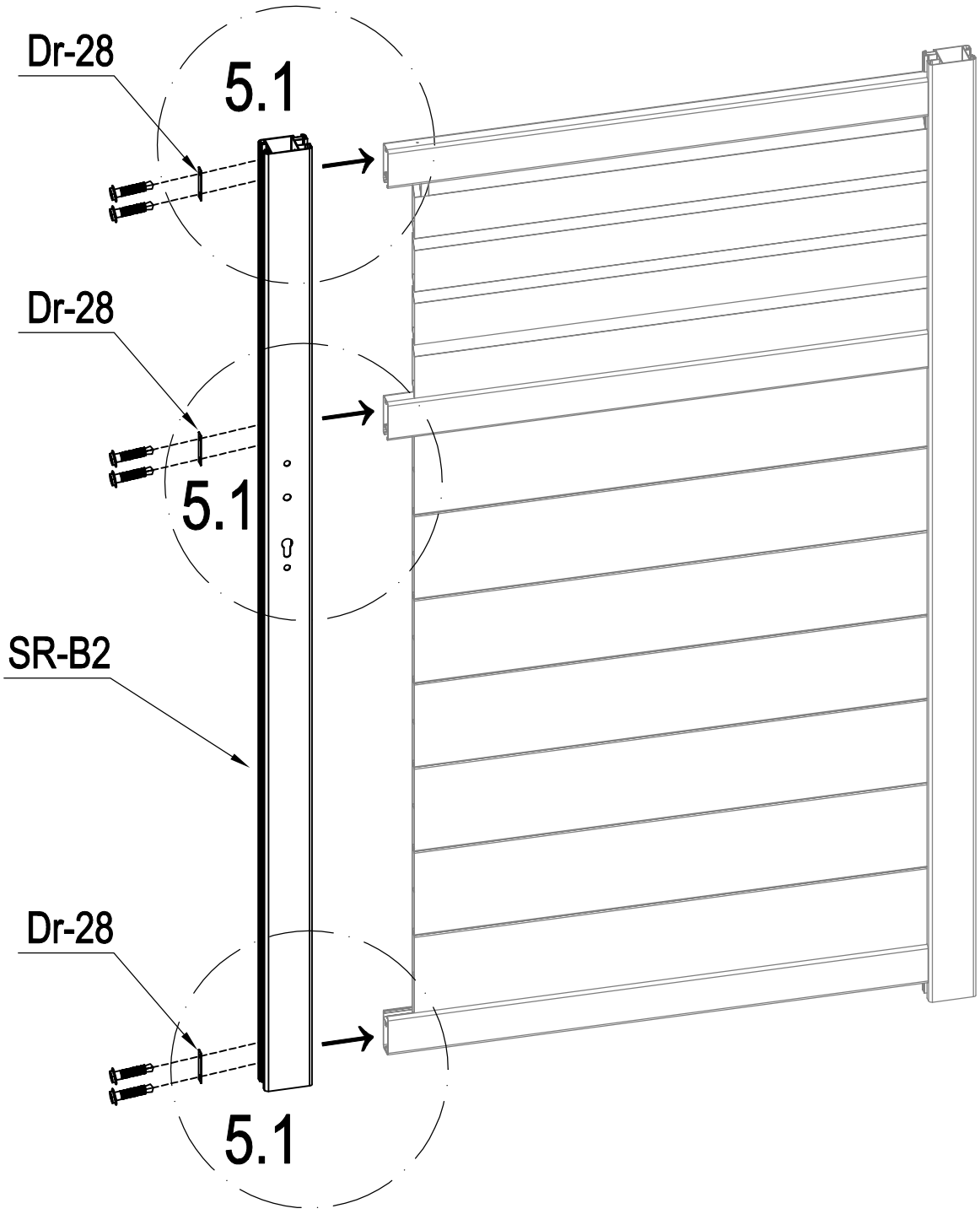

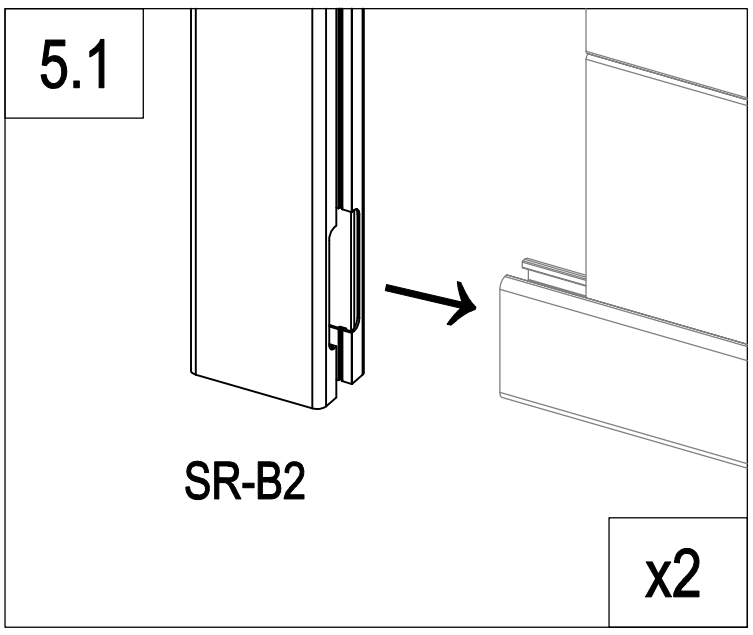

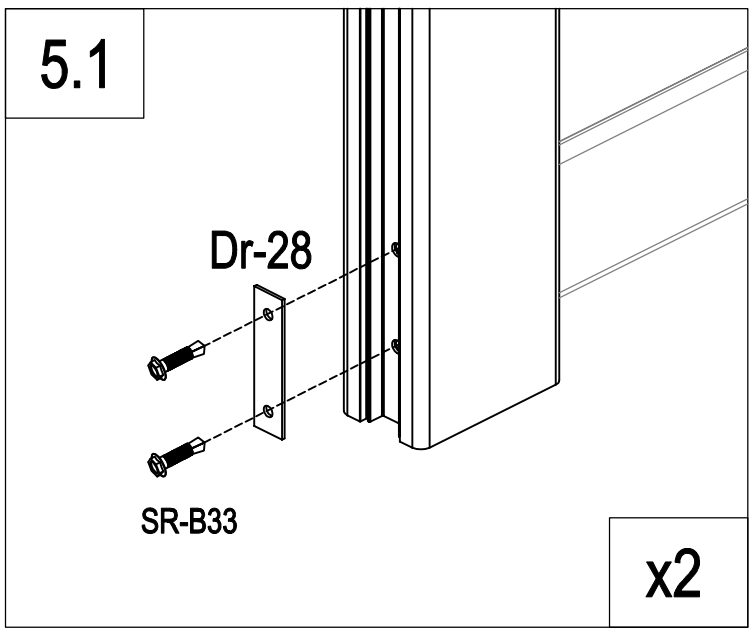

	SR-B2	1
	Dr-28	3
	SR-B33	6

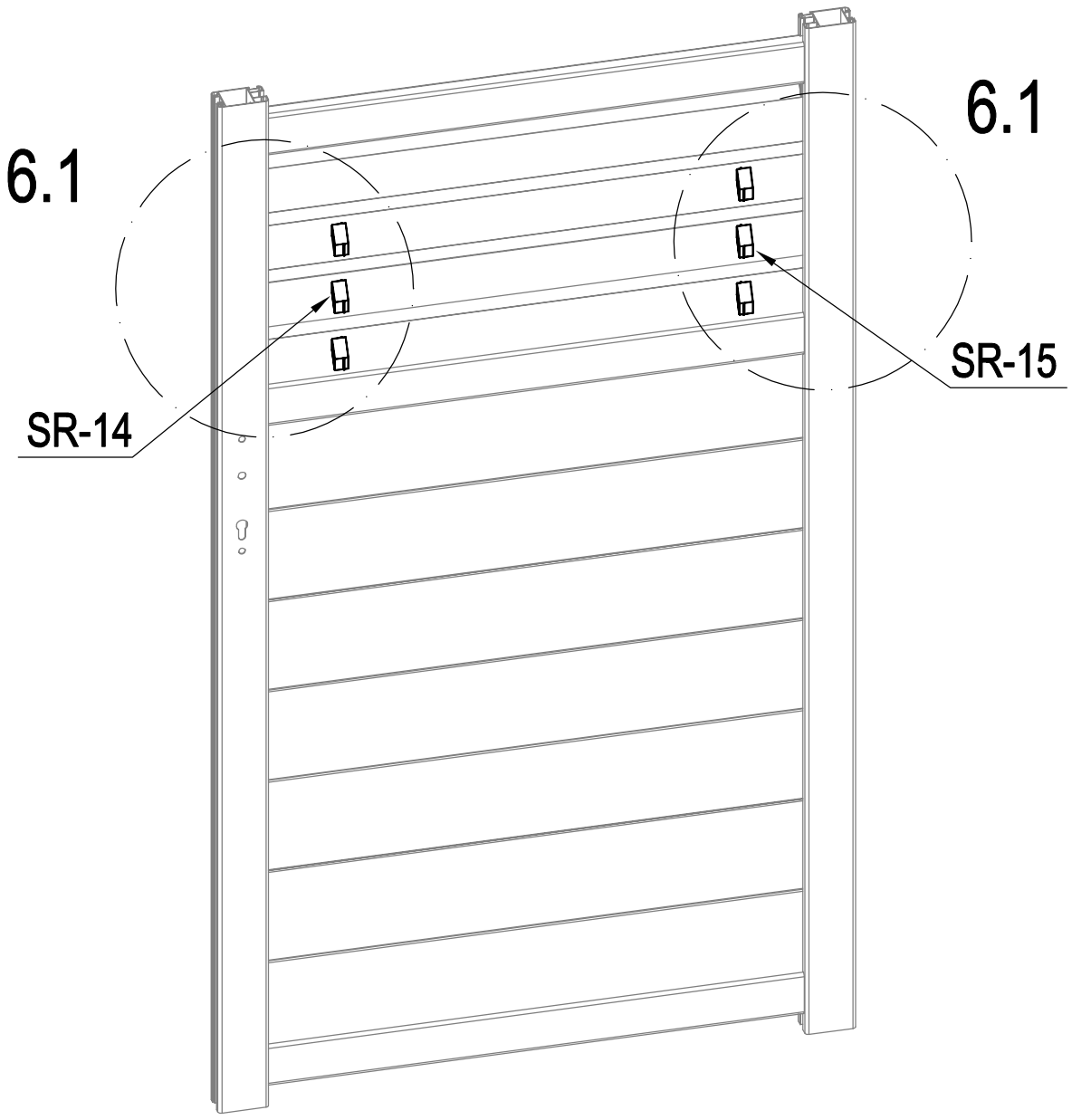

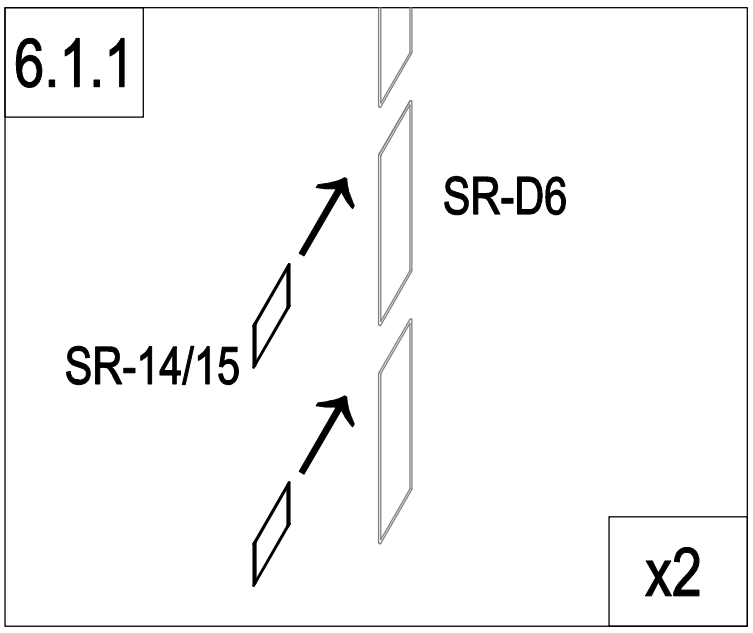

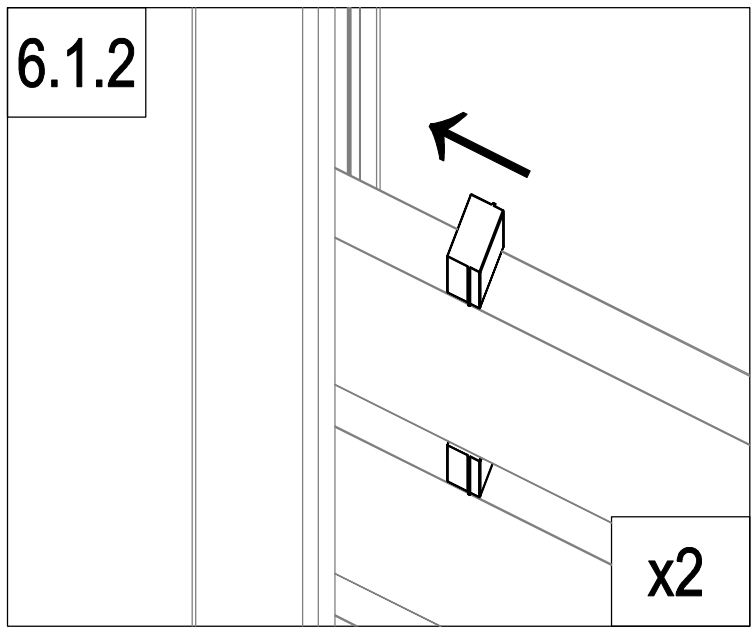

	SR-14	3
	SR-15	3

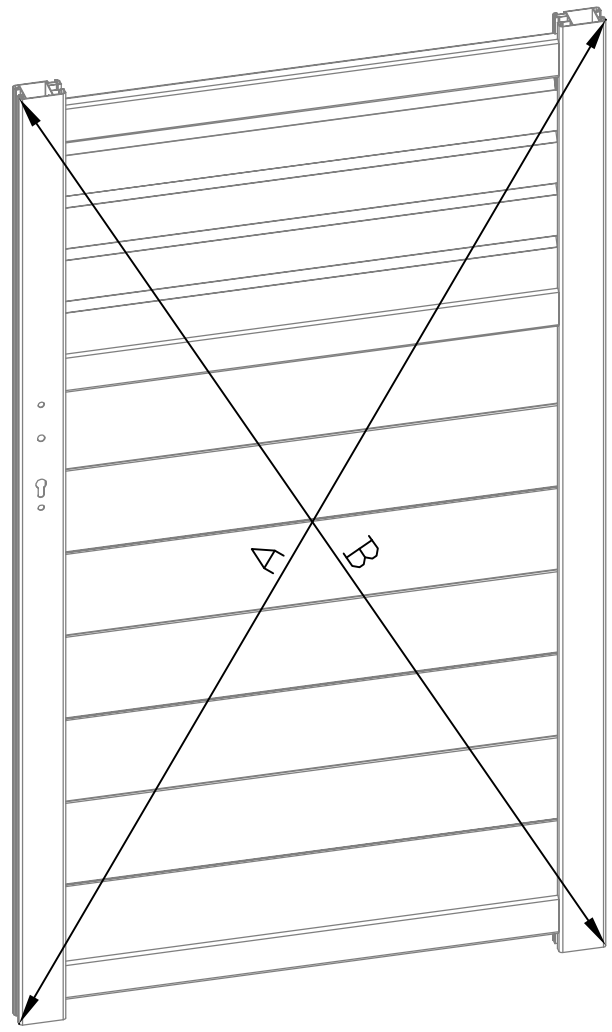

A=B

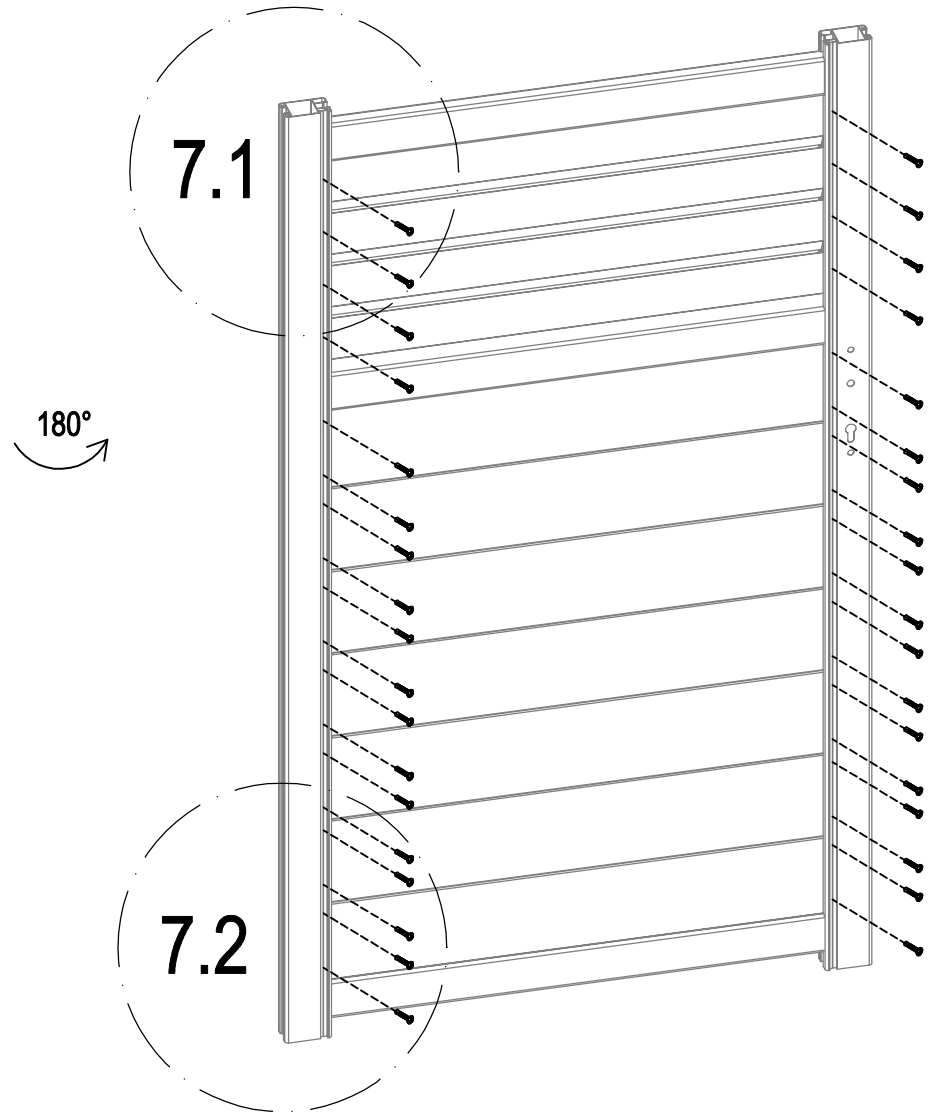

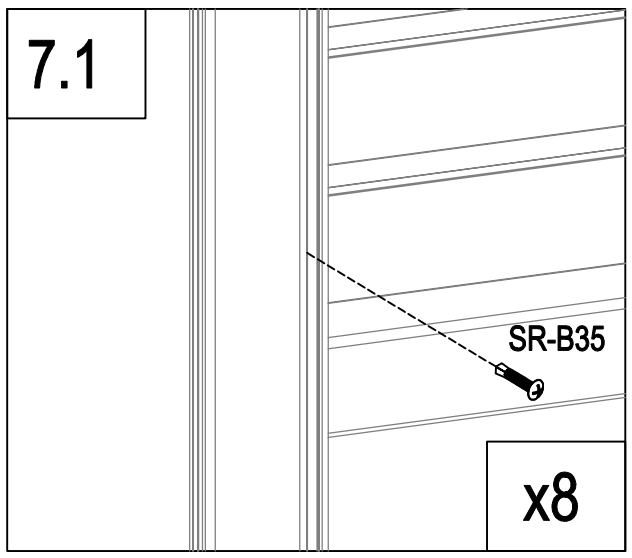

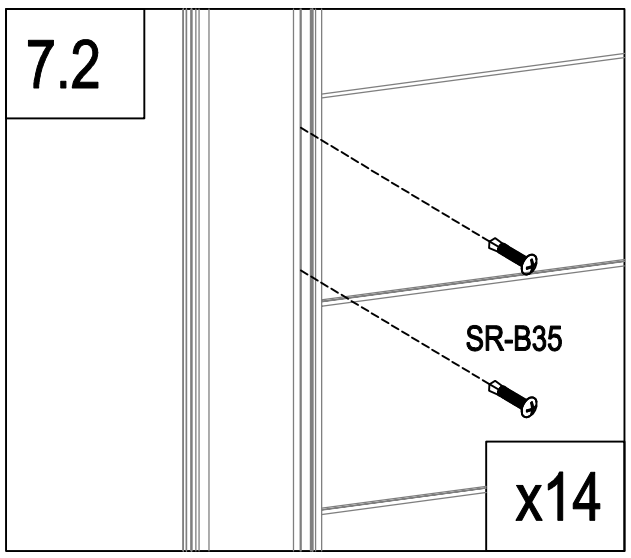

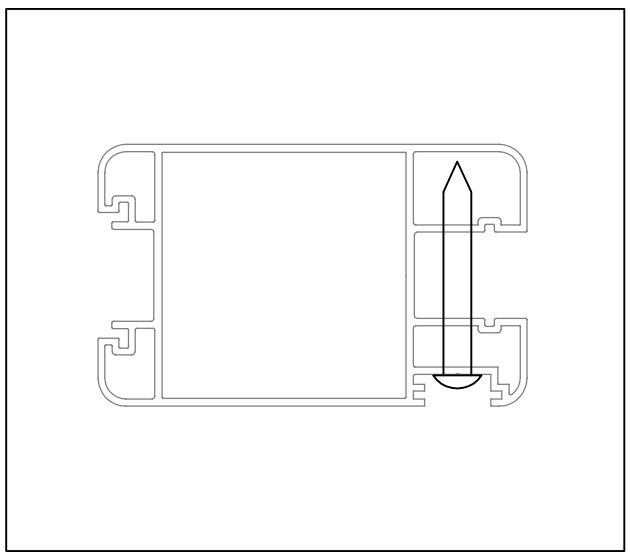

	SR-B35	36

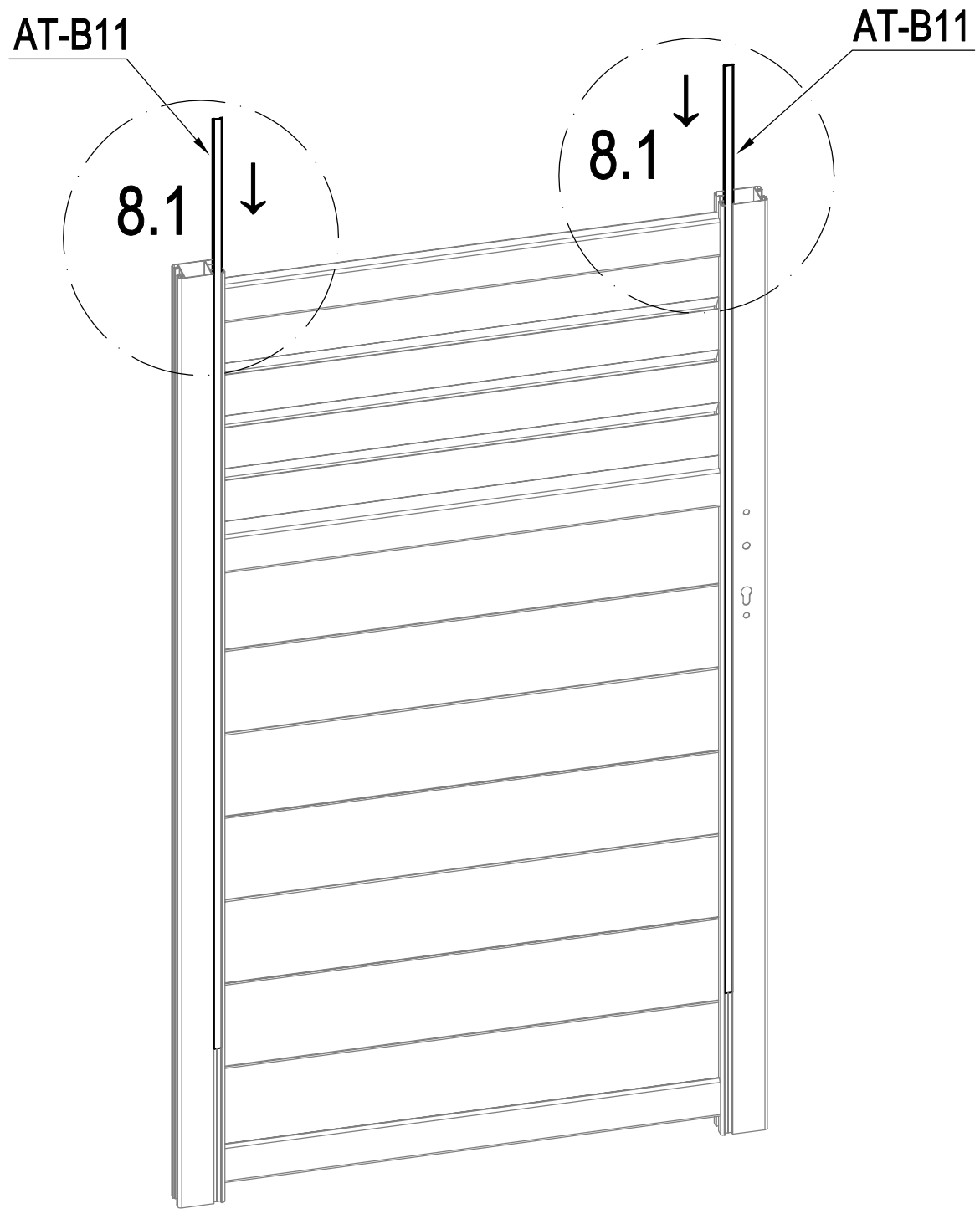

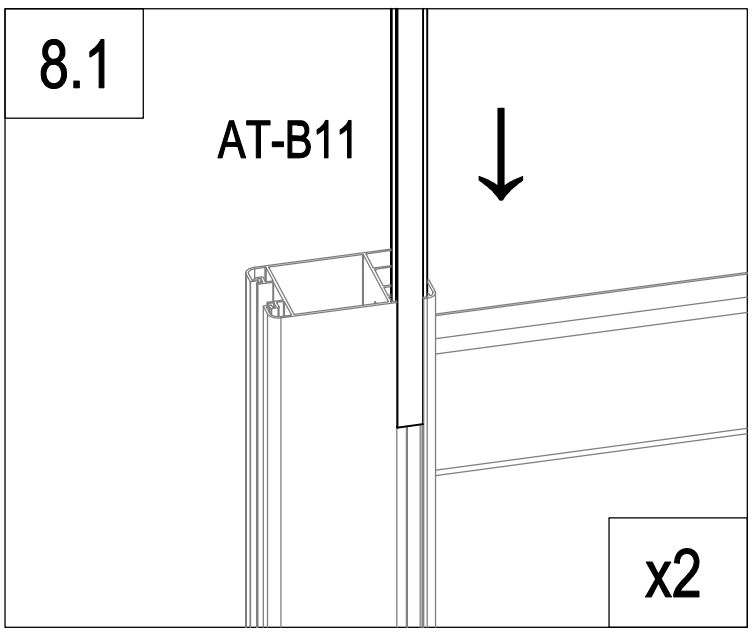

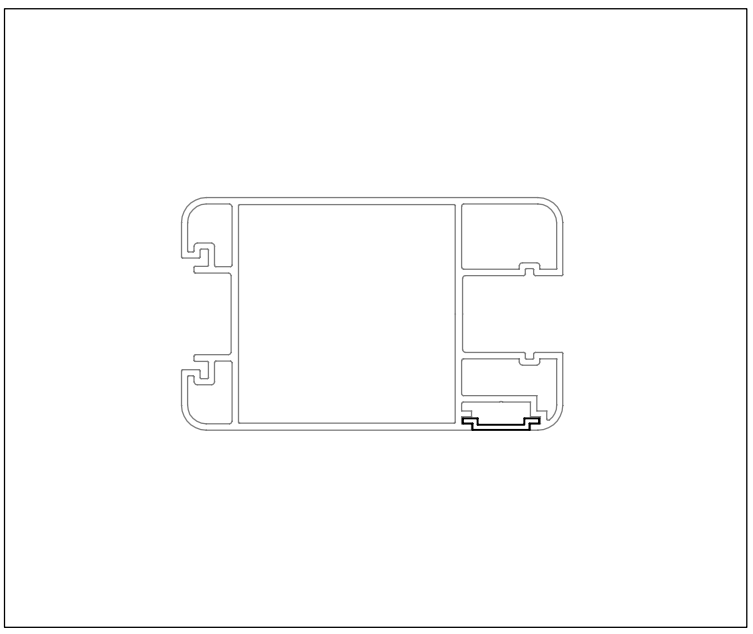

	AT-B11	2

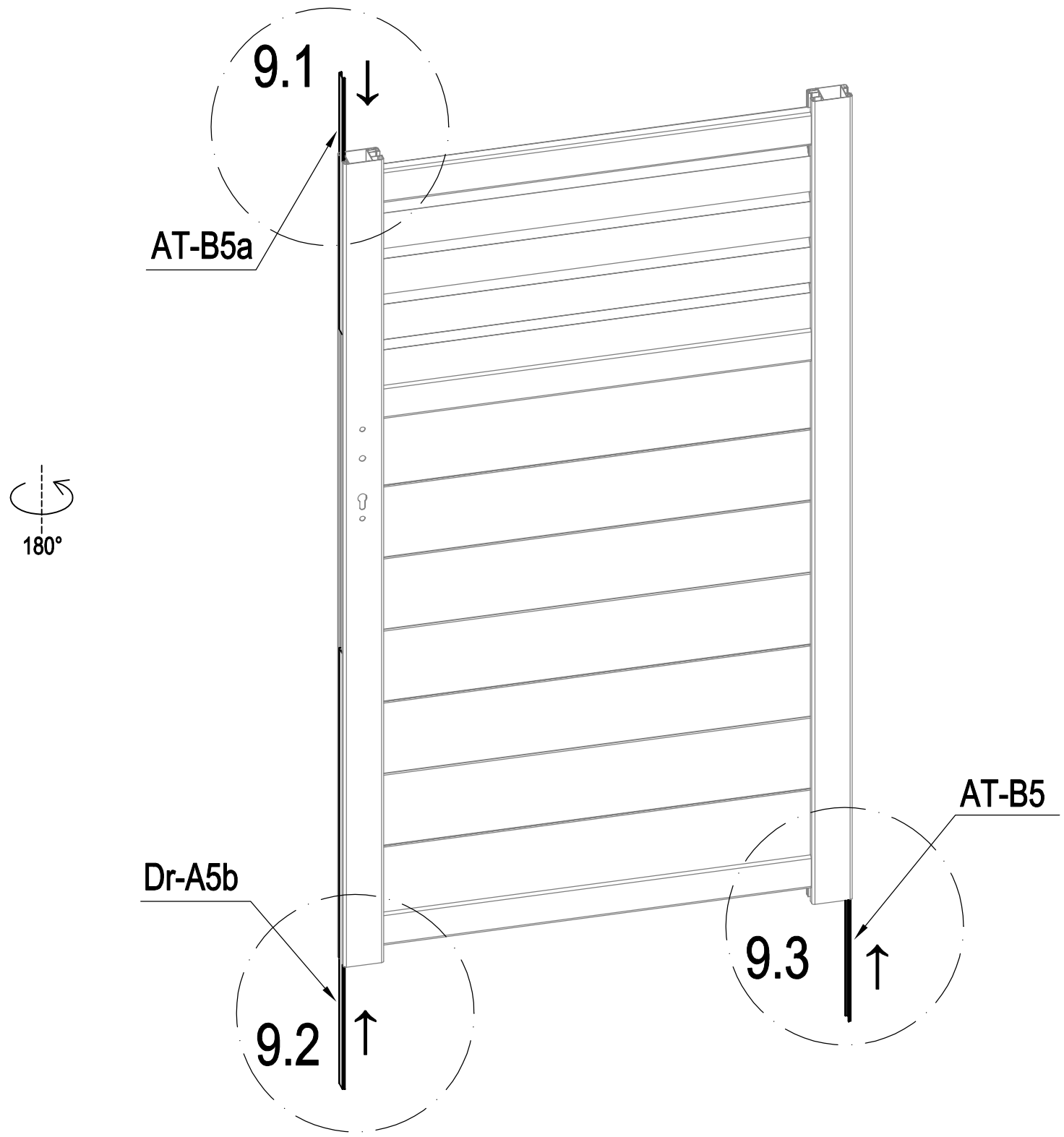

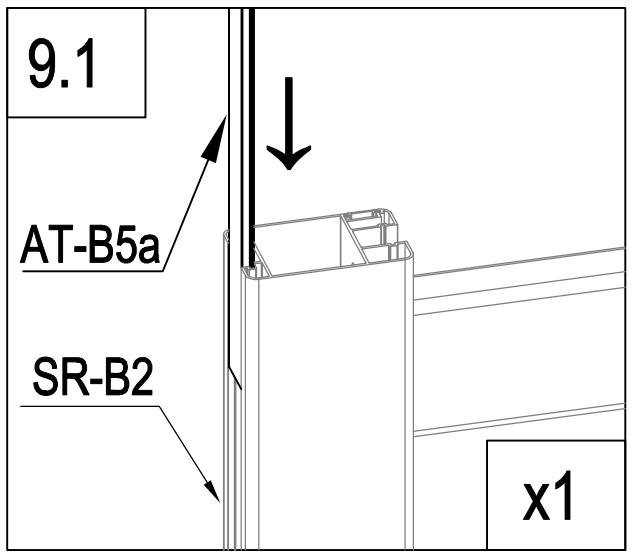

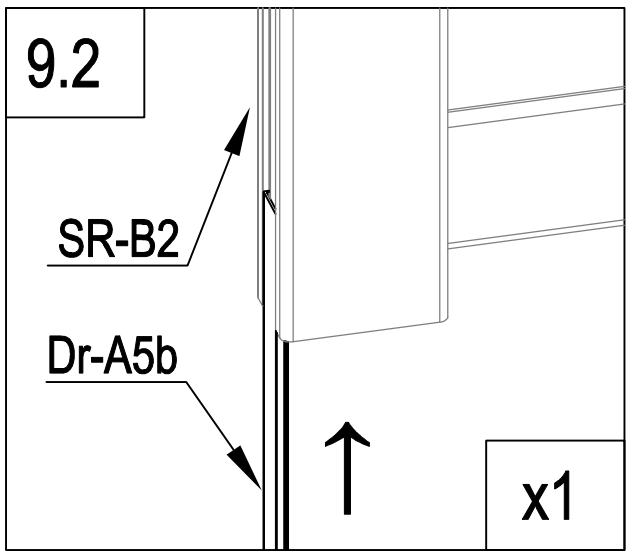

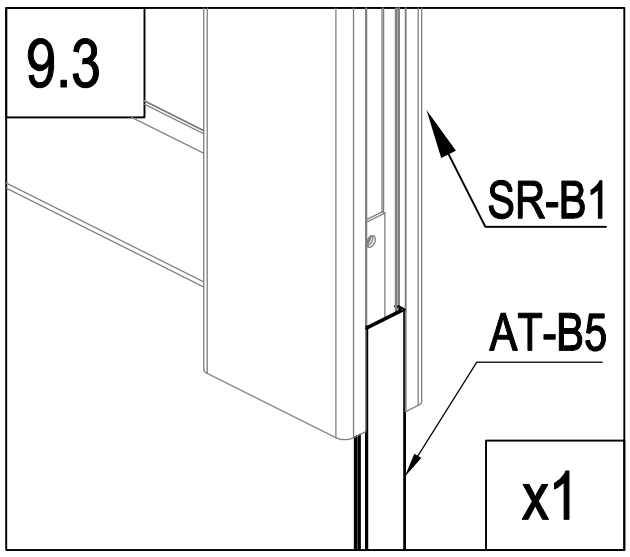

	AT-B5	1
	AT-B5a	1
	Dr-A5b	1

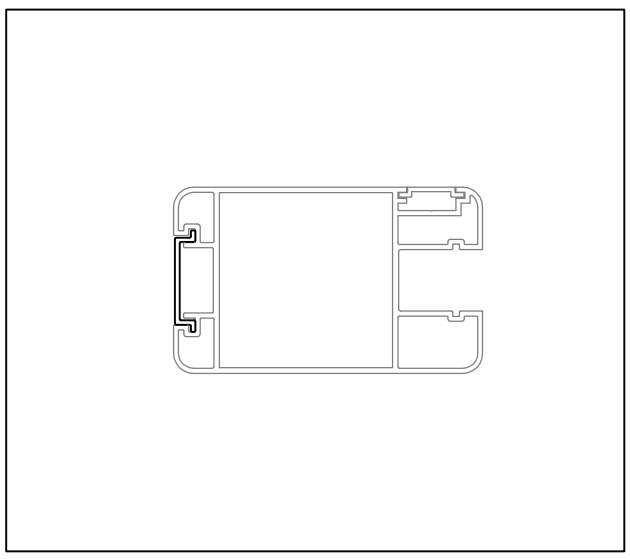

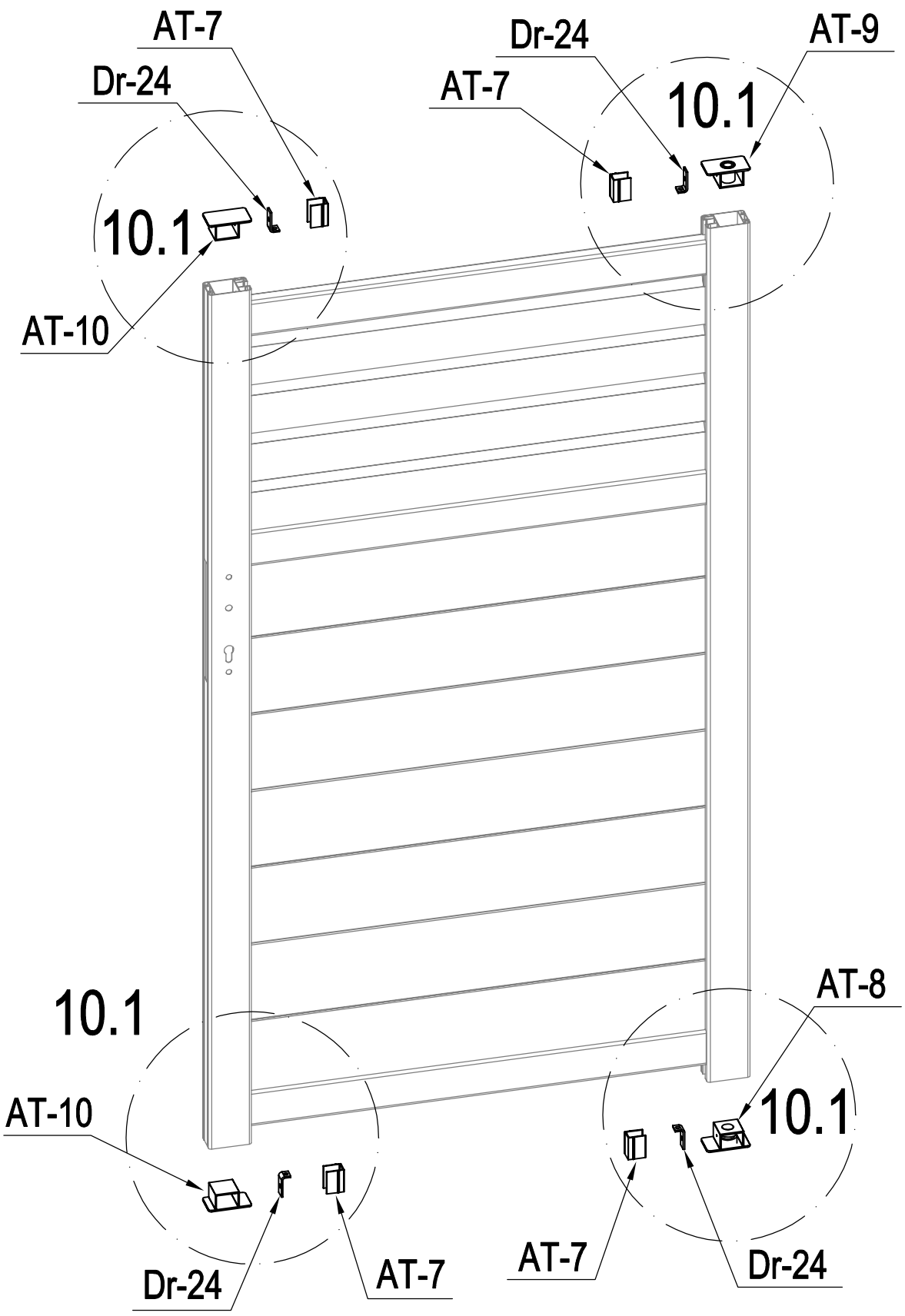

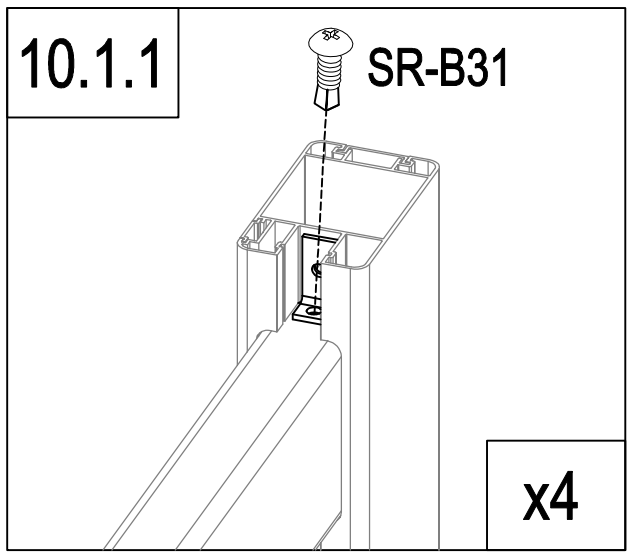

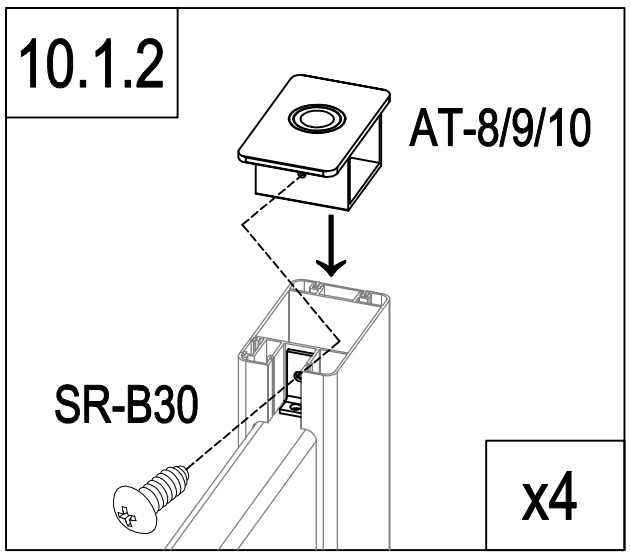

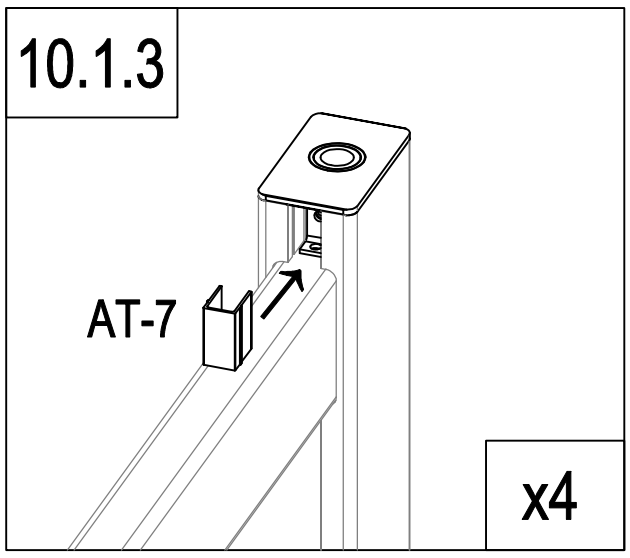

	AT-8	1
	AT-9	1
	AT-10	2
	Dr-24	4

	AT-7	4
	SR-B30	4
	SR-B31	4

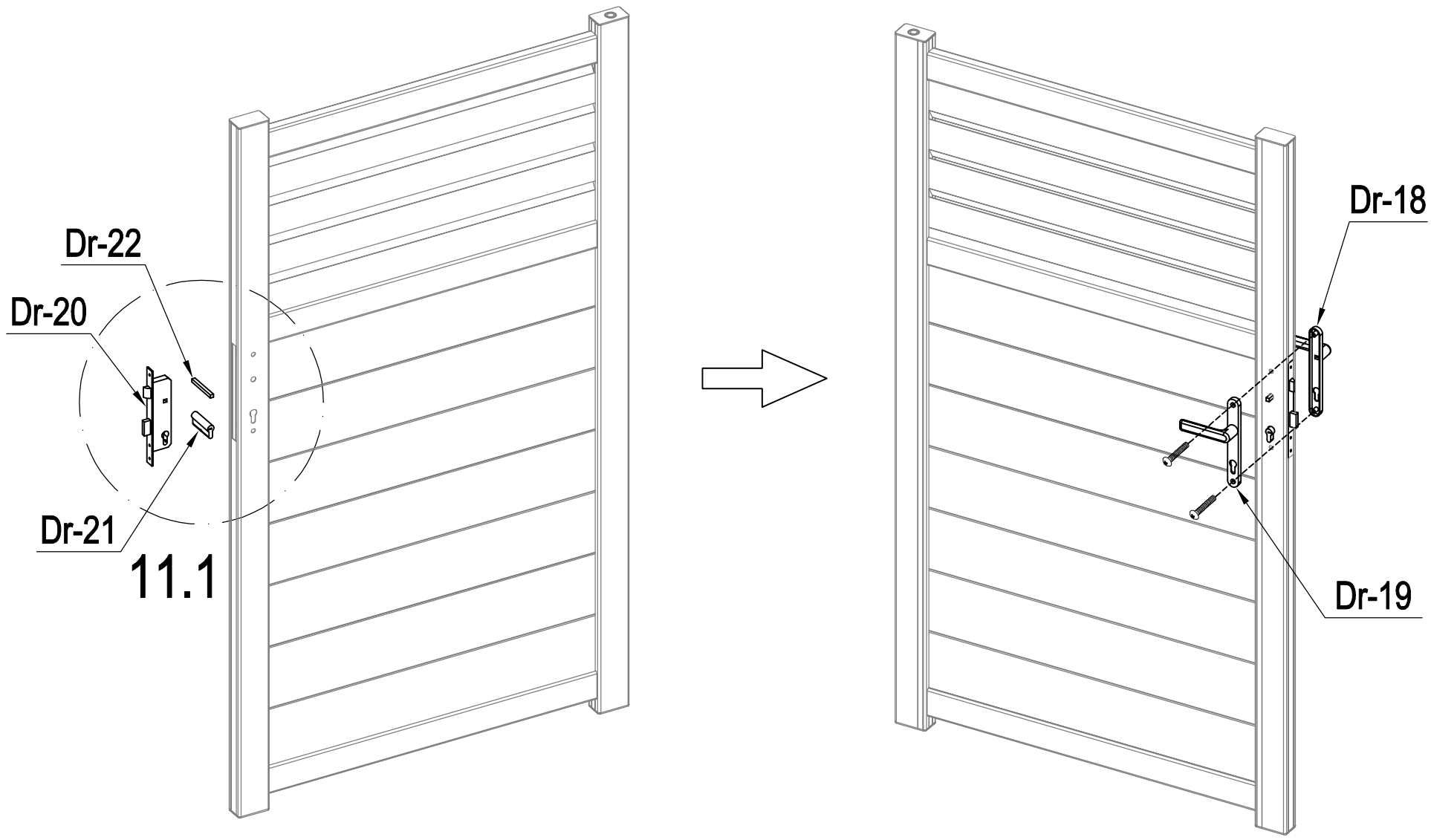

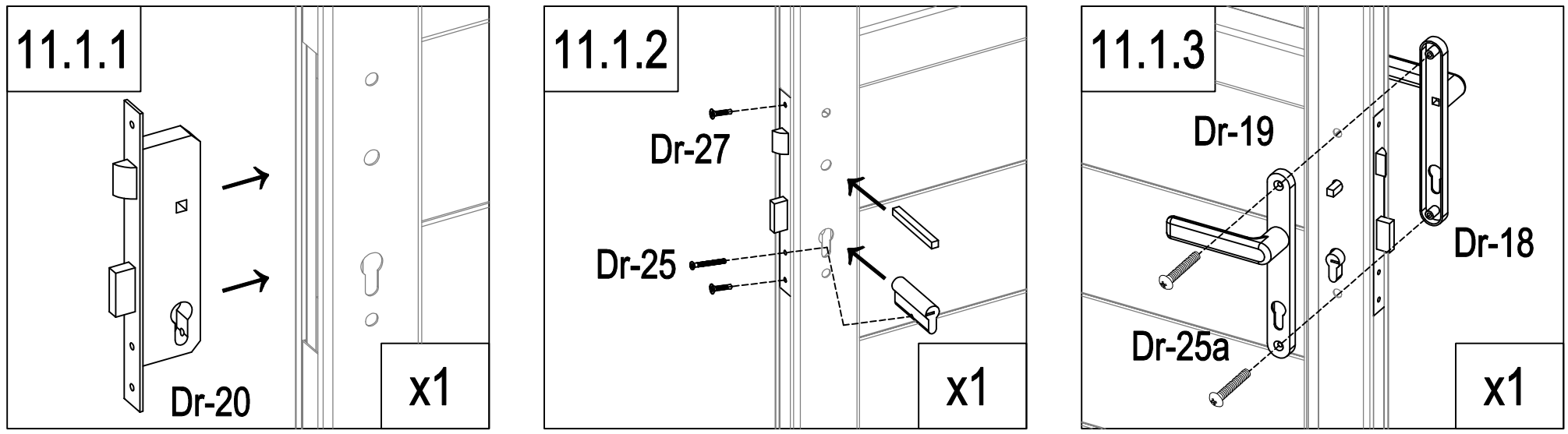

	Dr-20	1
	Dr-21	1
	Dr-22	1
	Dr-25	1

	Dr-18	1
	Dr-19	1
	Dr-25a	2
	Dr-27	2

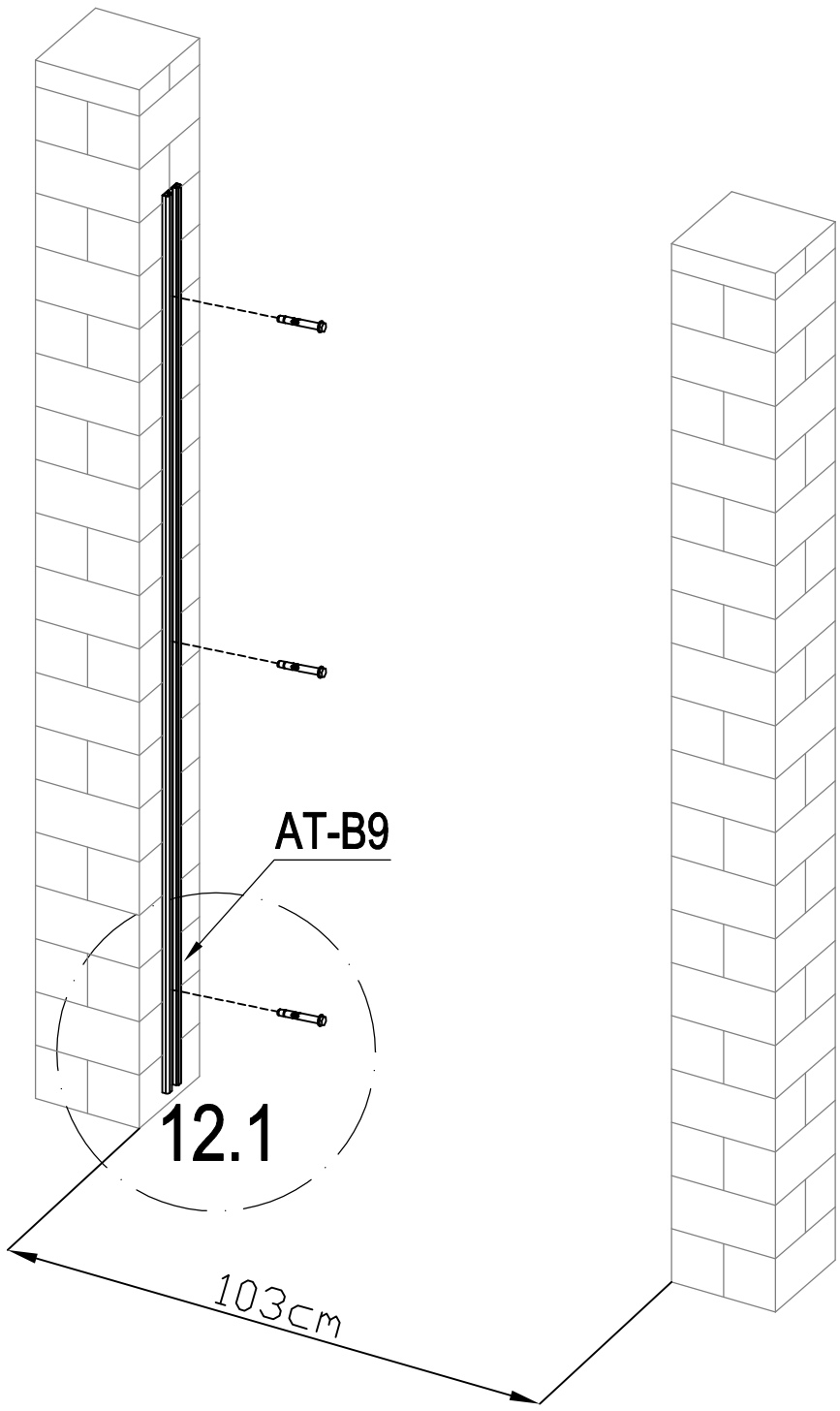

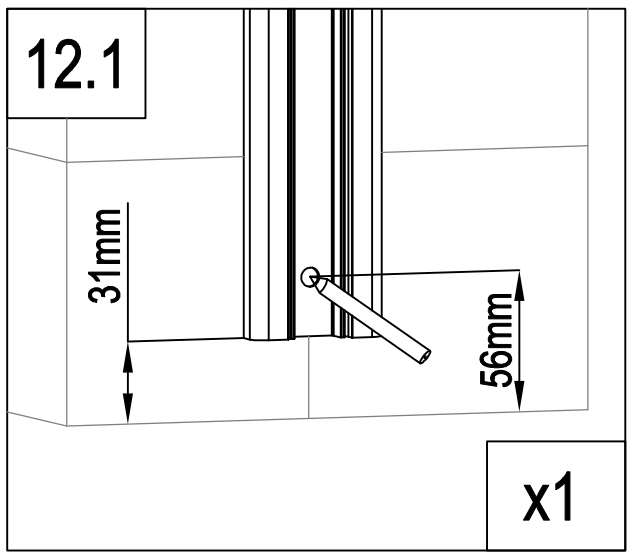

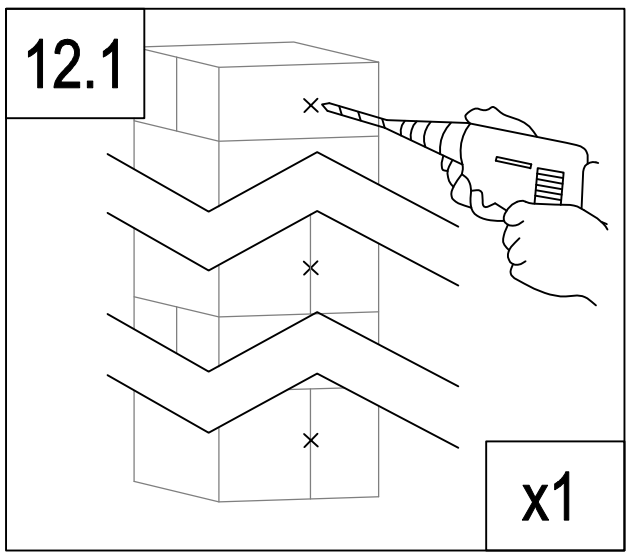

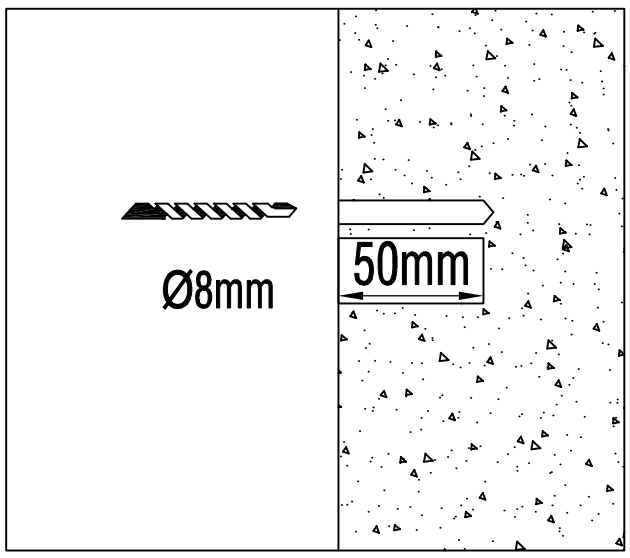

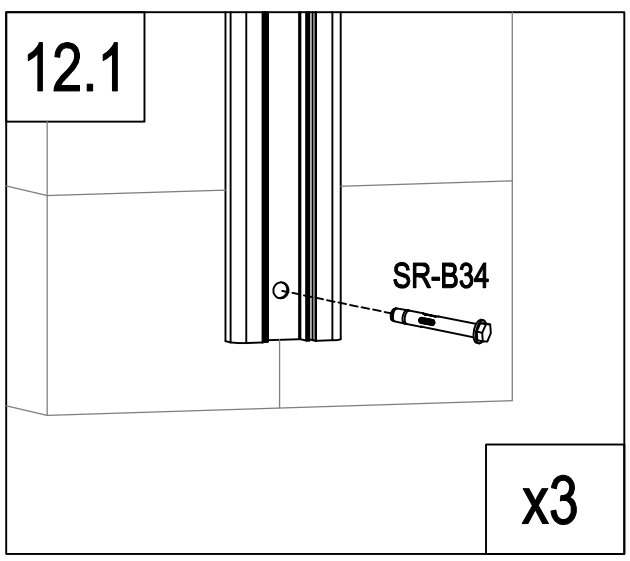

	AT-B9	1
	SR-B34	3

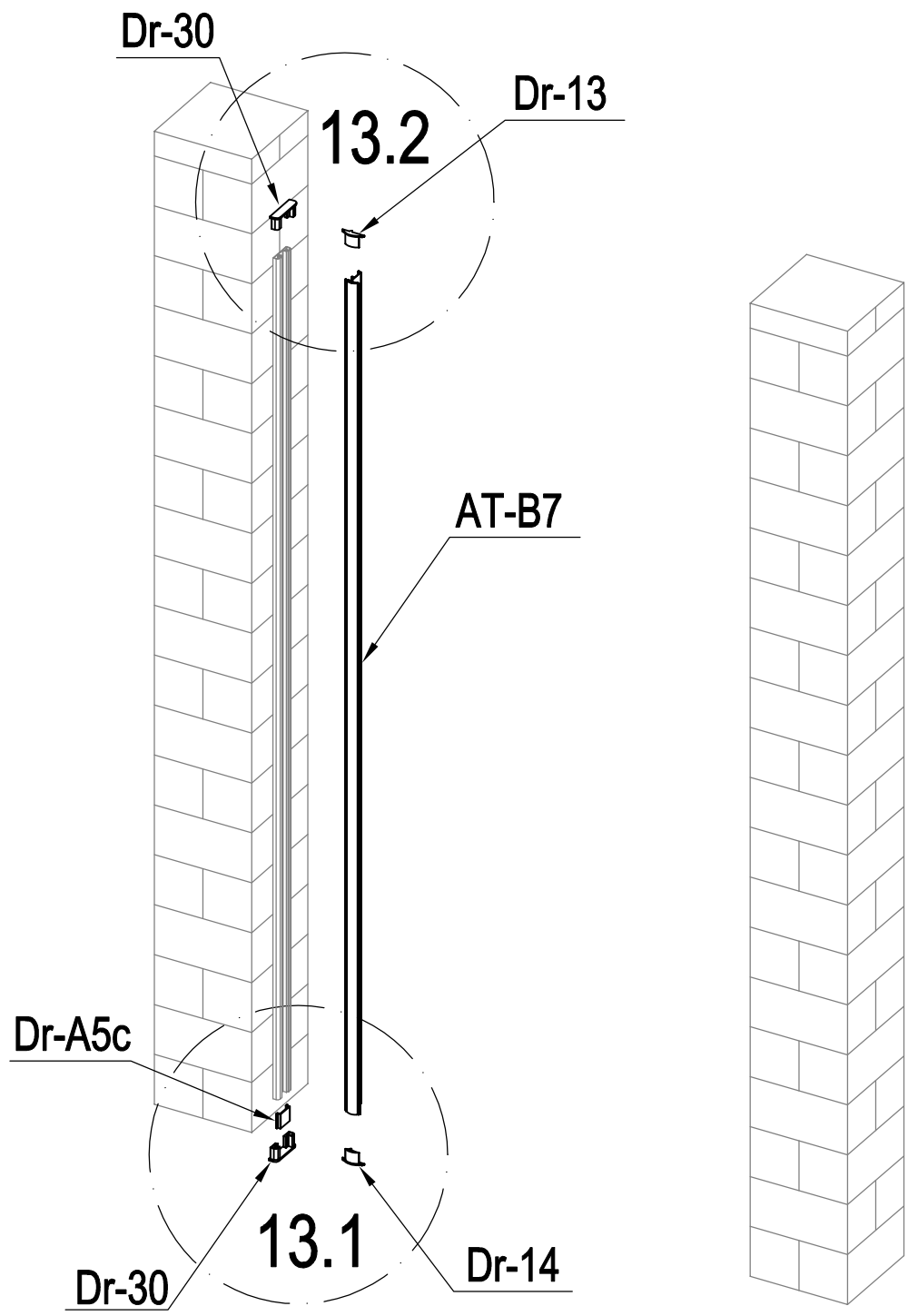

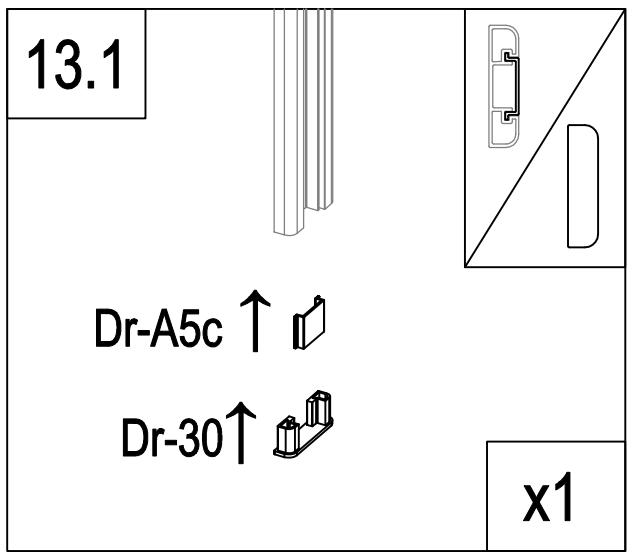

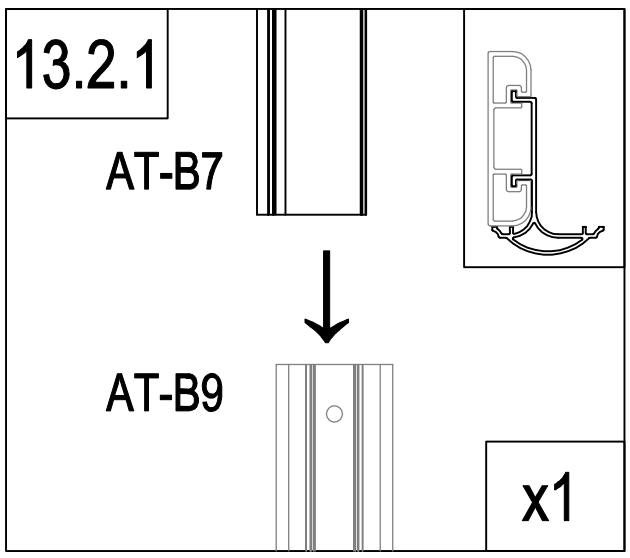

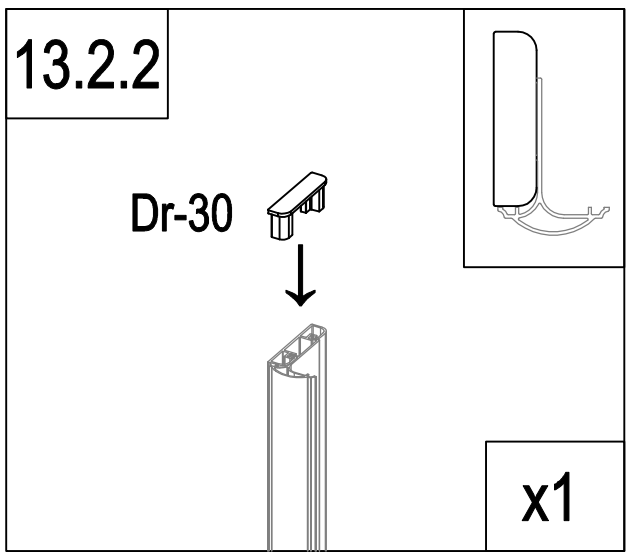

	AT-B7	1
	Dr-13	1
	Dr-14	1
	Dr-30	2
	Dr-A5c	1

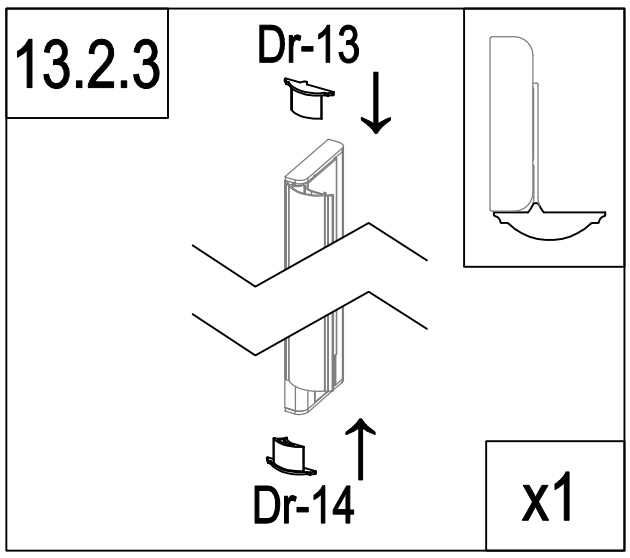

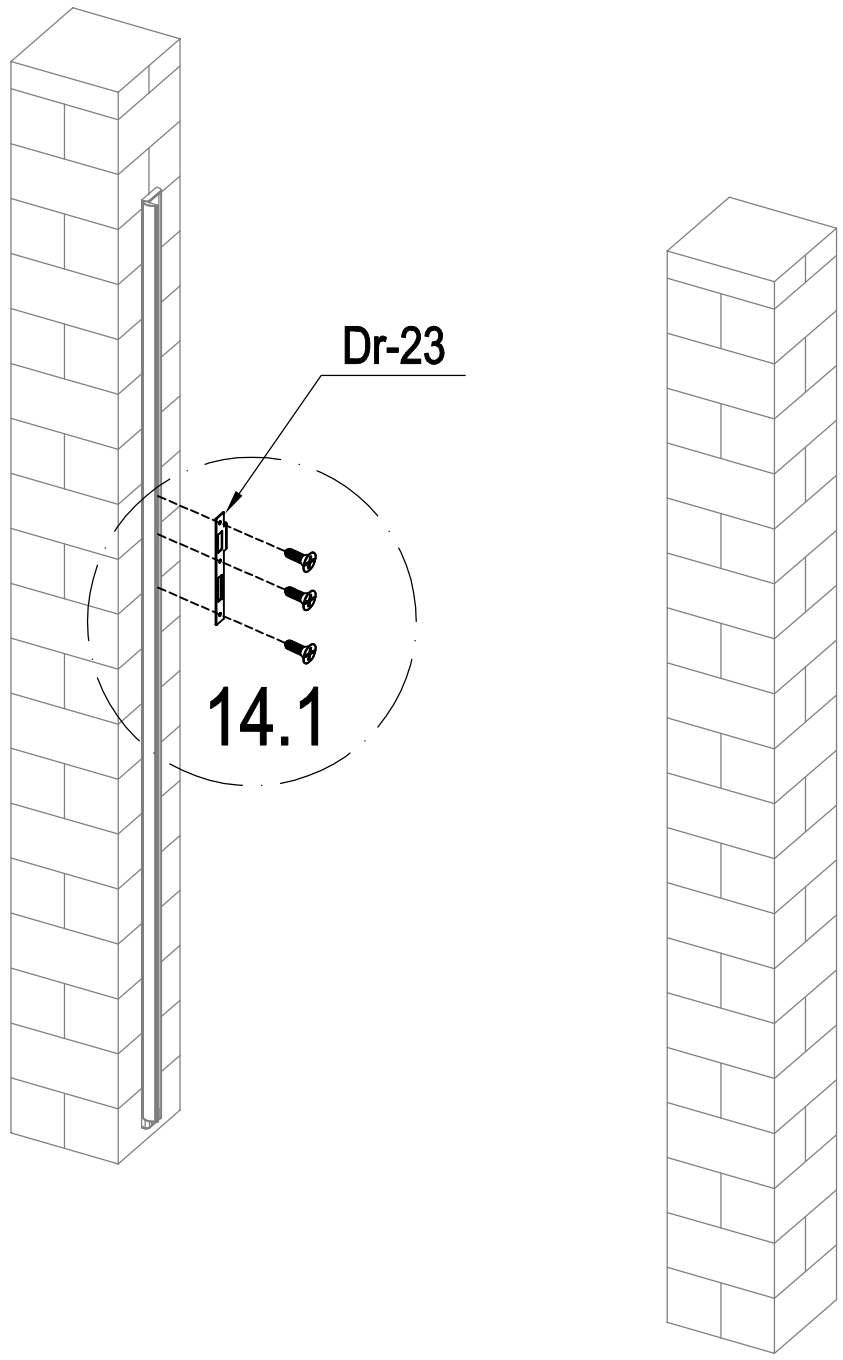

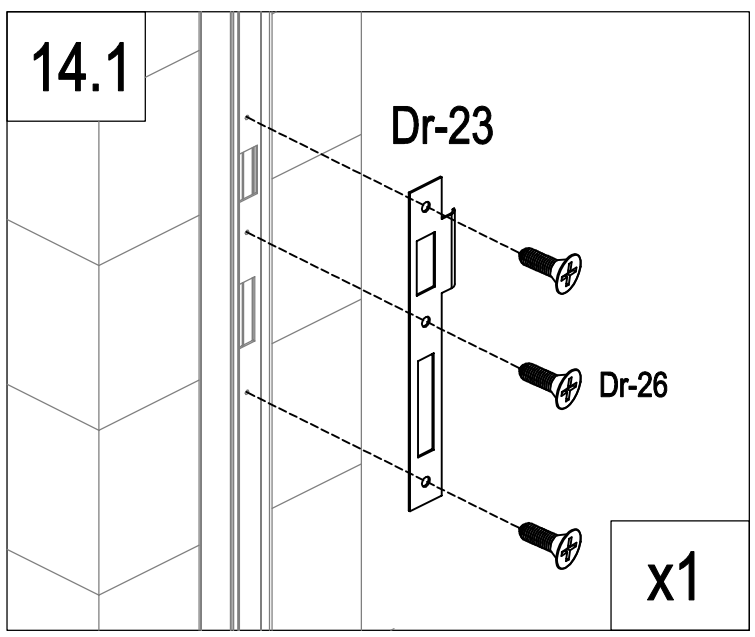

	Dr-23	1
	Dr-26	3

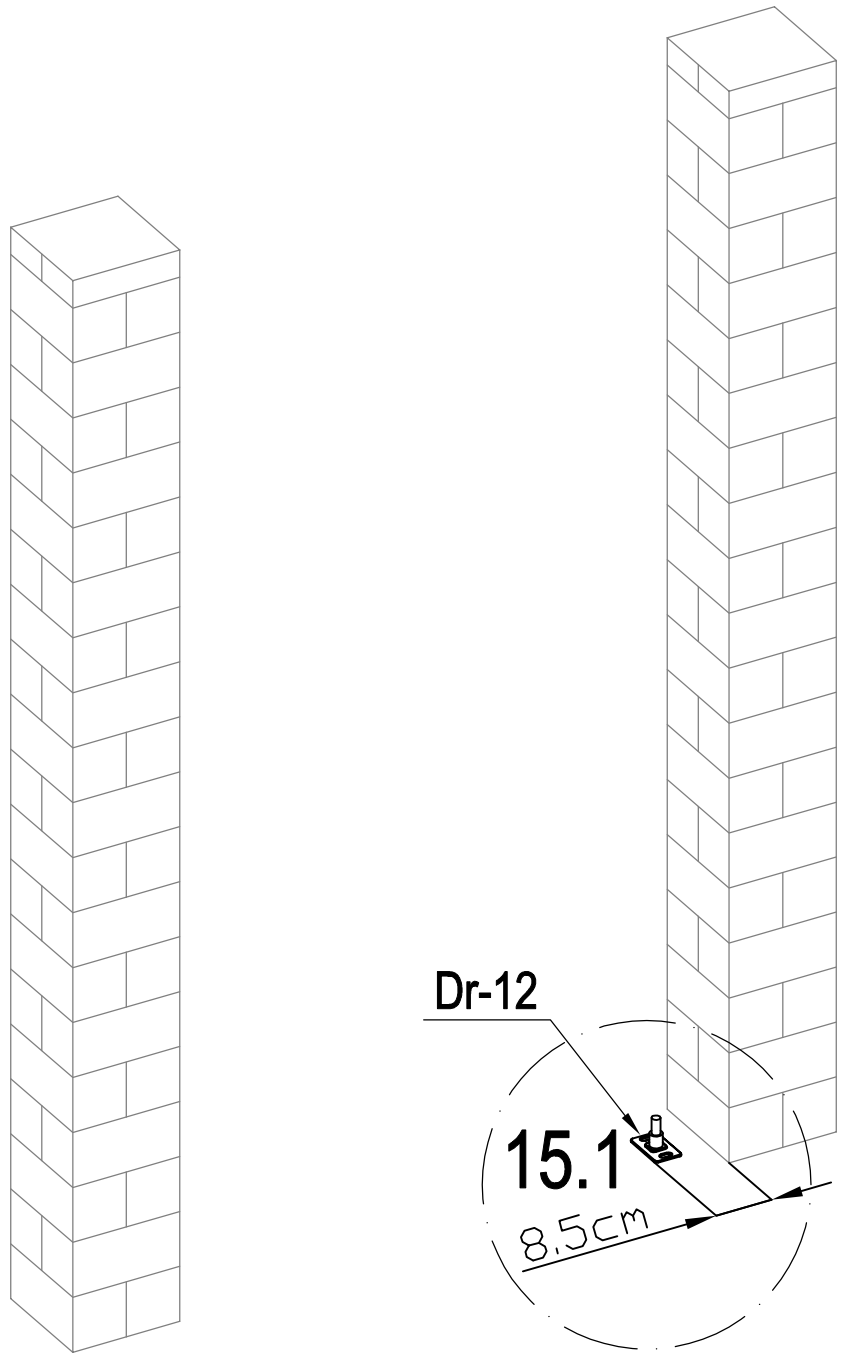

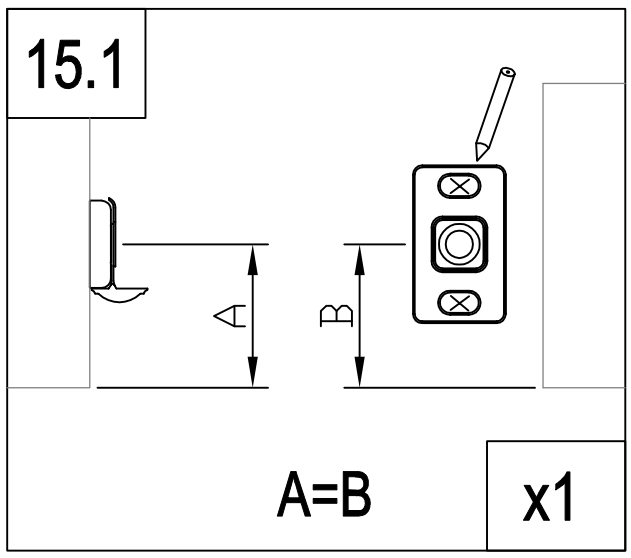

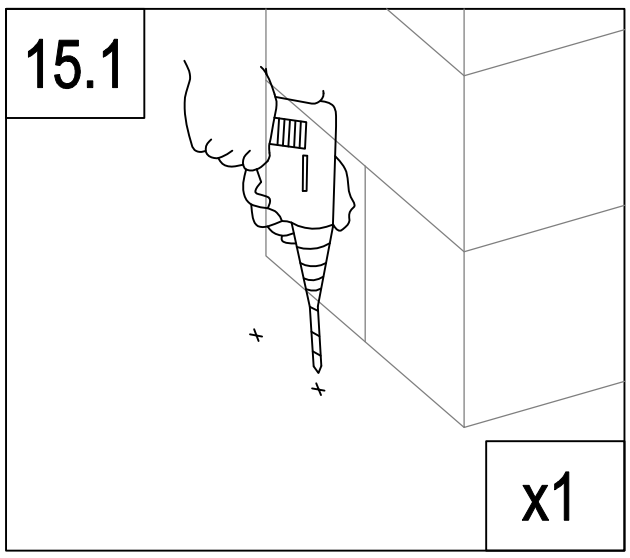

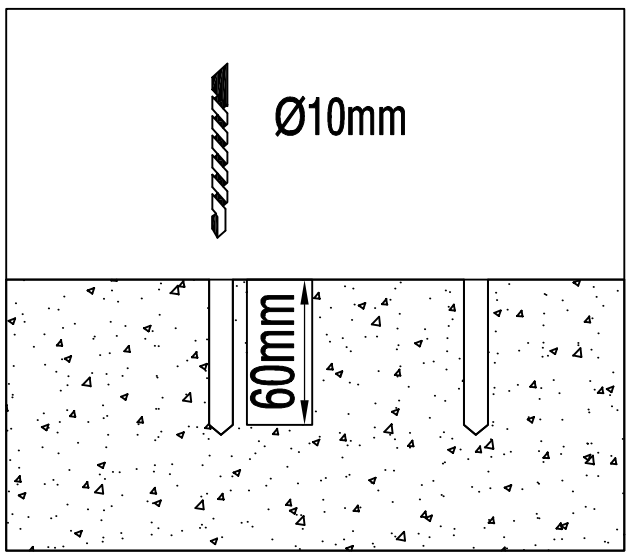

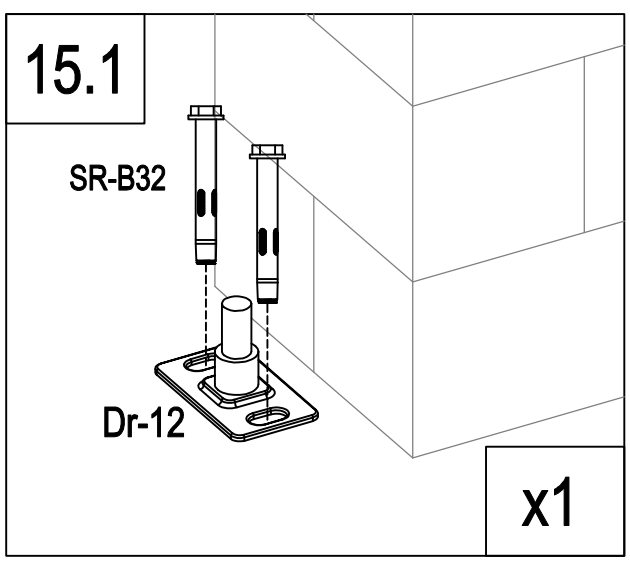

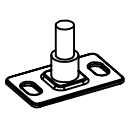	Dr-12	1
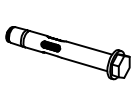	SR-B32	2

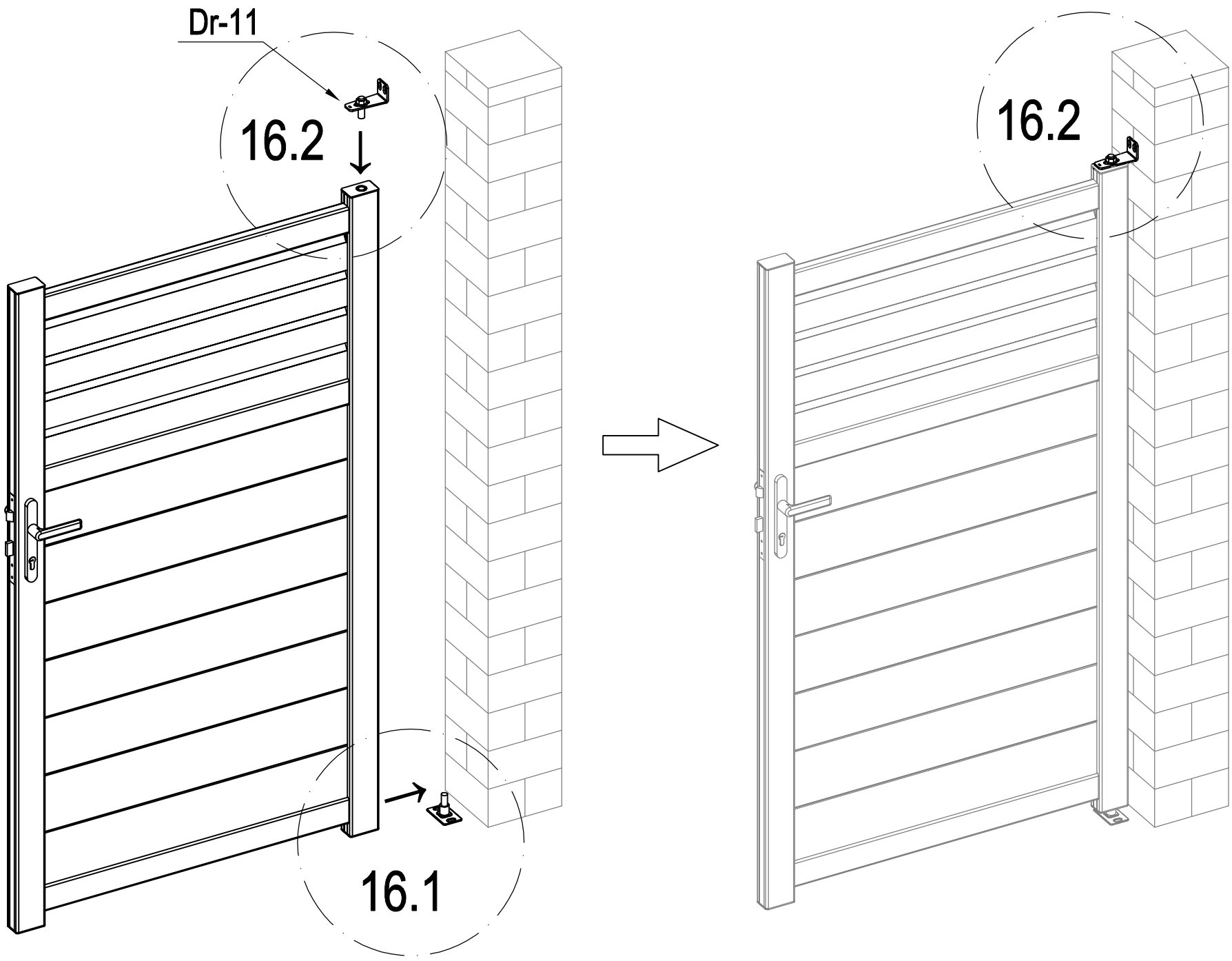

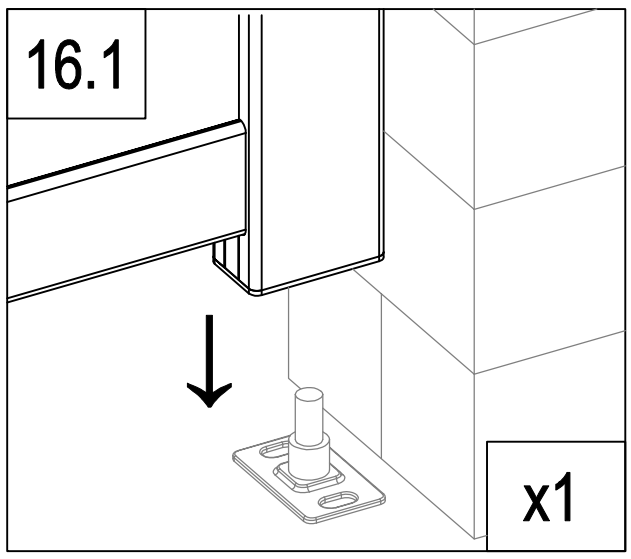

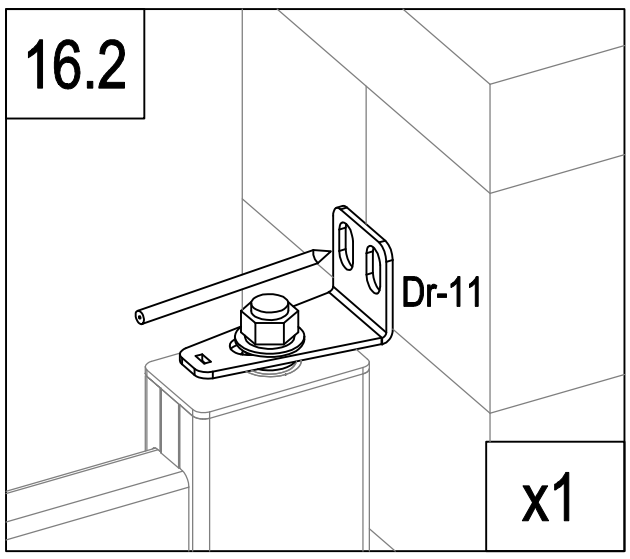

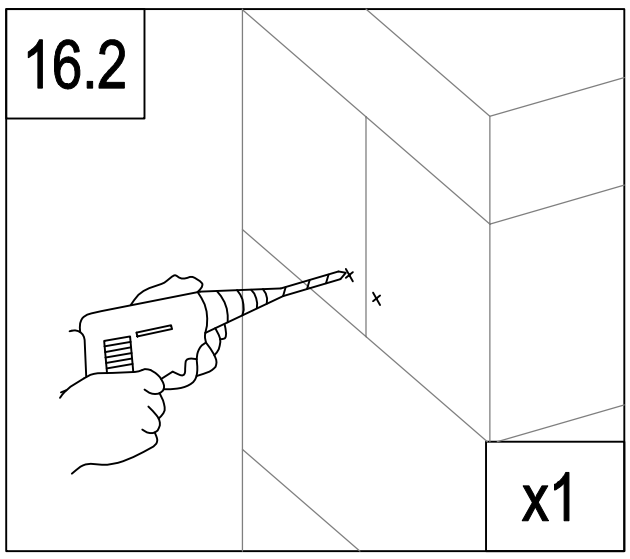

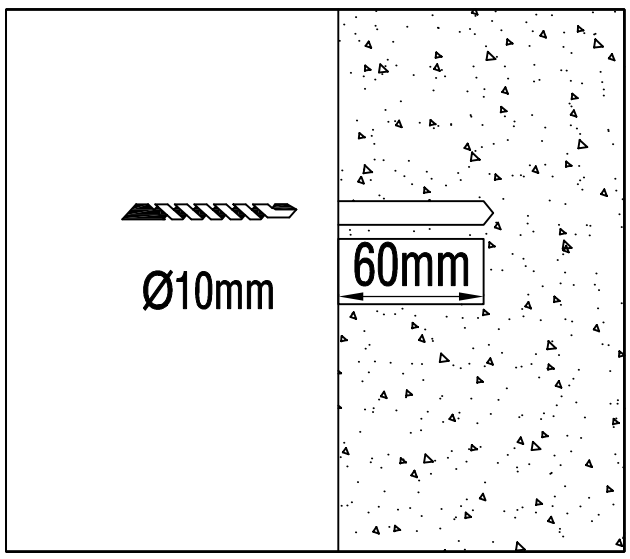

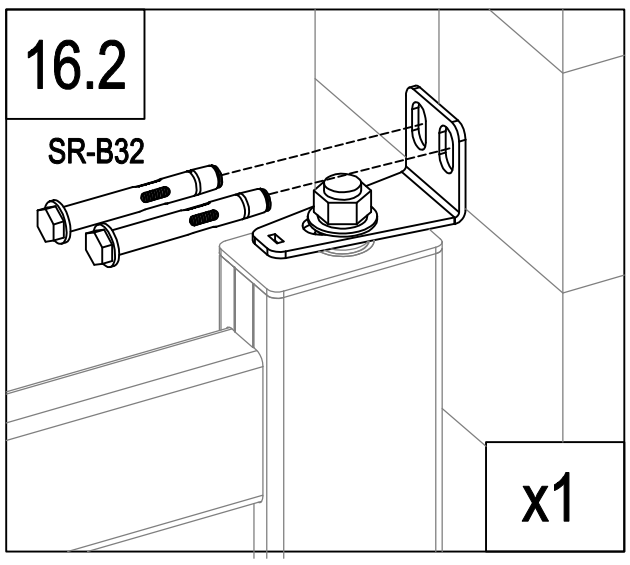

	Dr-11	1
	SR-B32	2

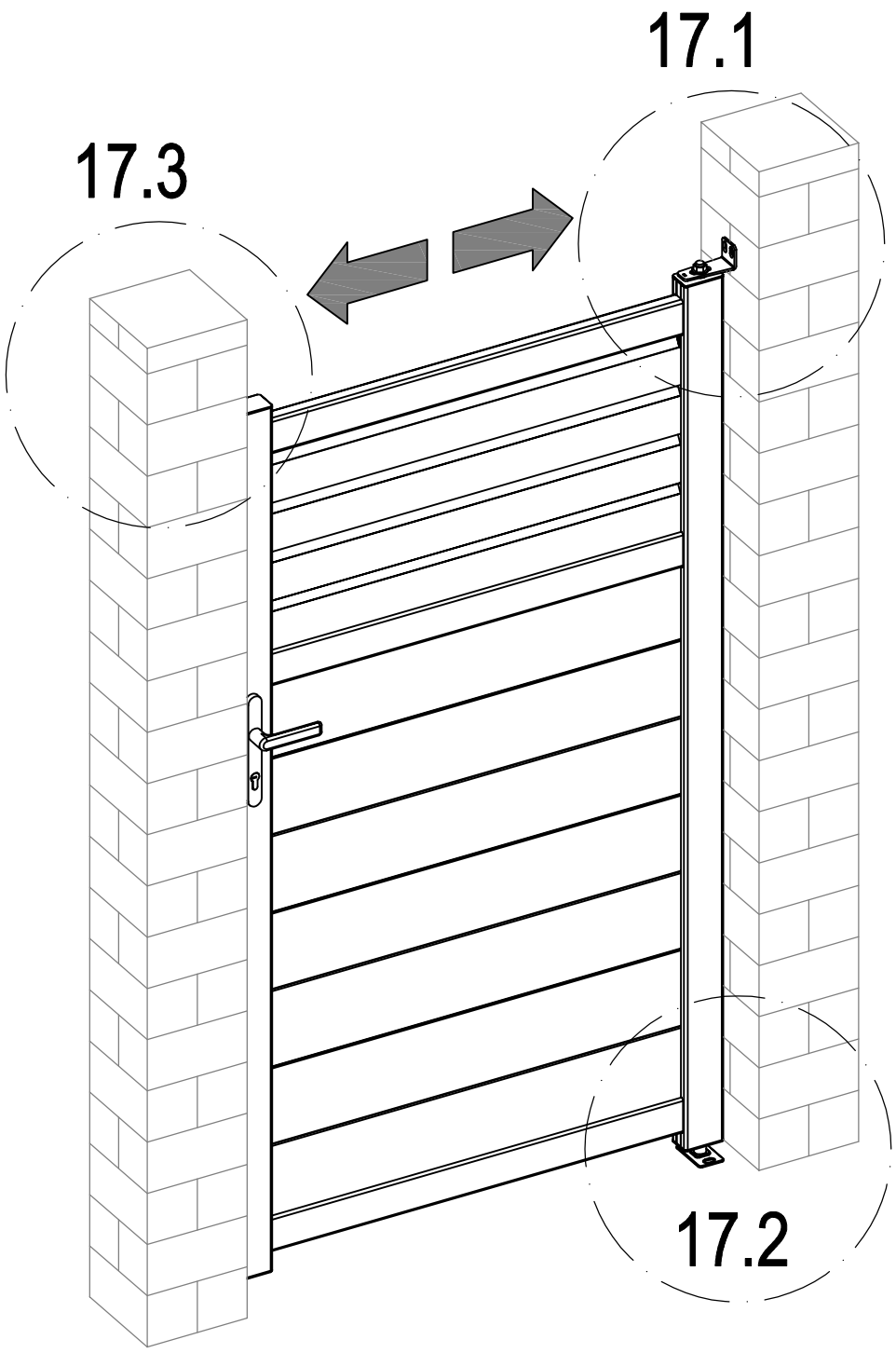
17.1
17.3
17.2

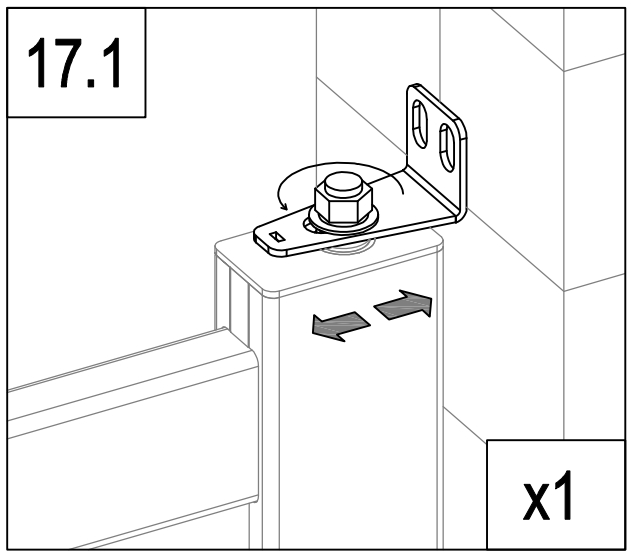
17.1
x1

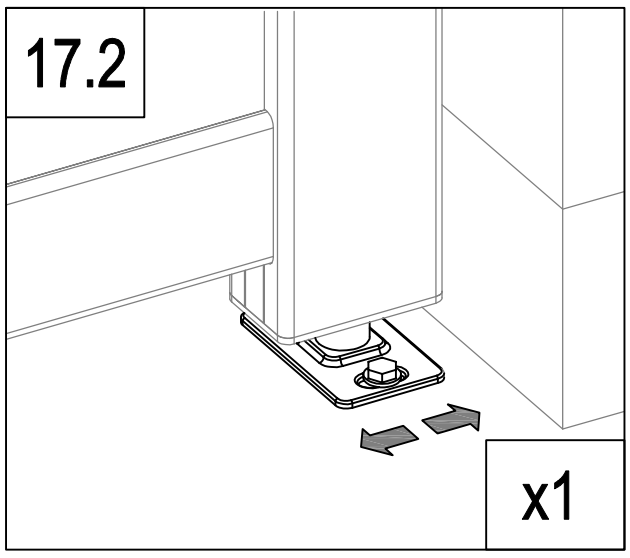
17.2
x1

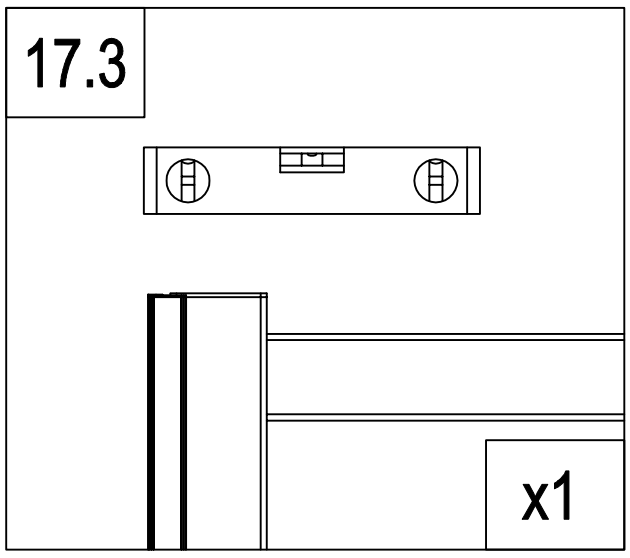
17.3
x1

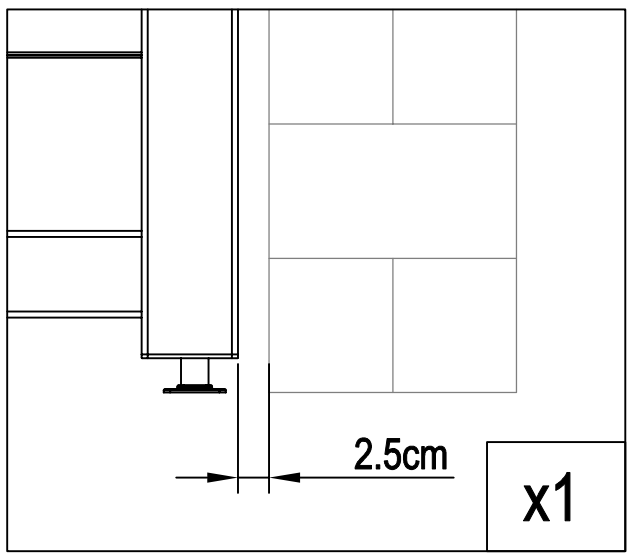
2.5cm
x1

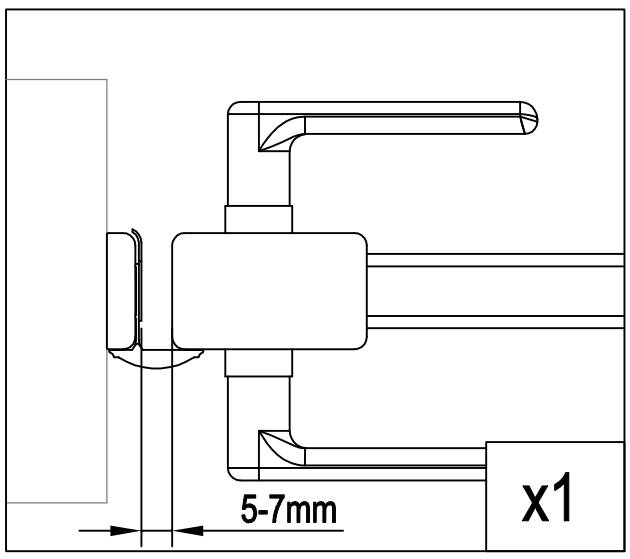
5-7mm
x1

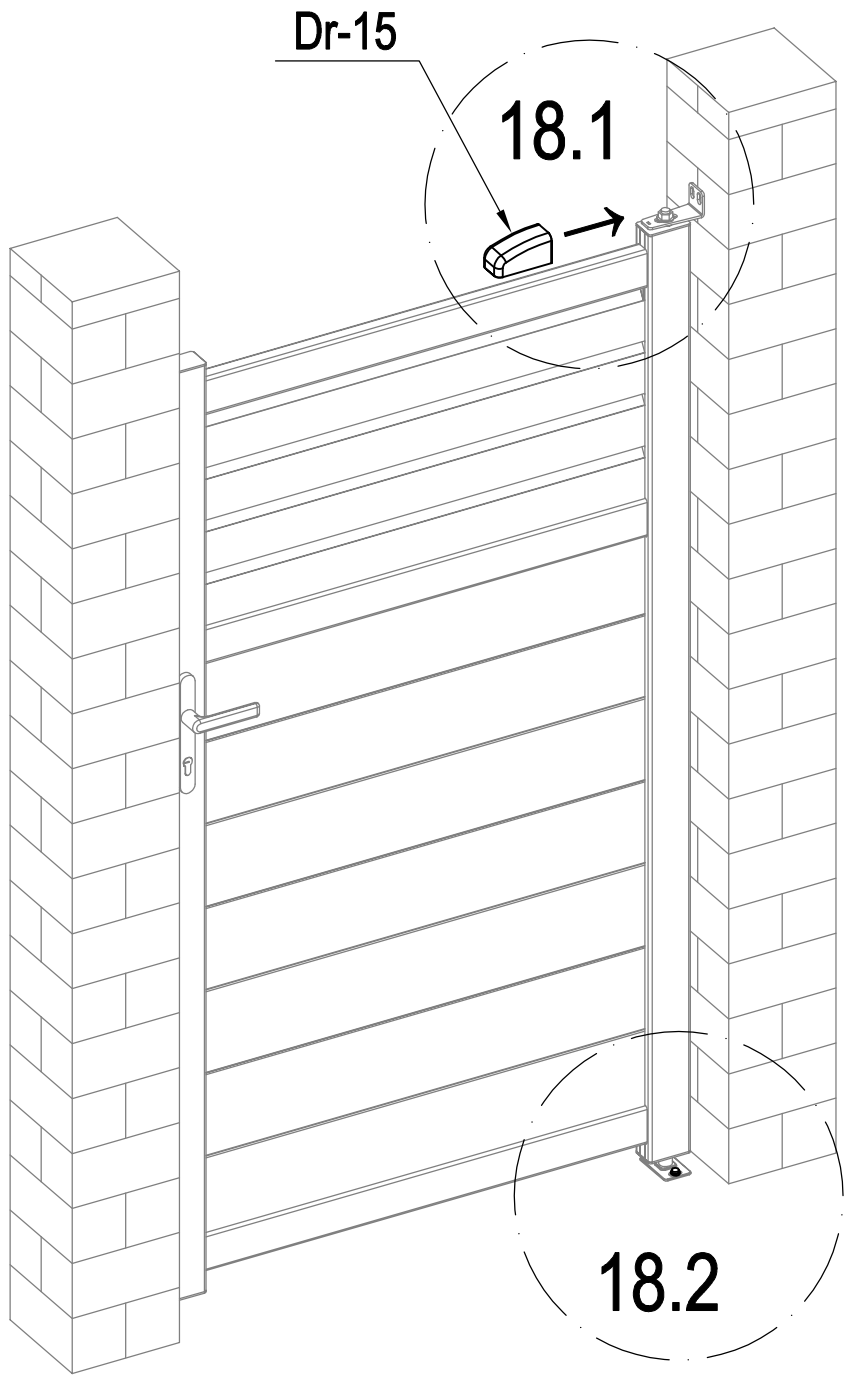

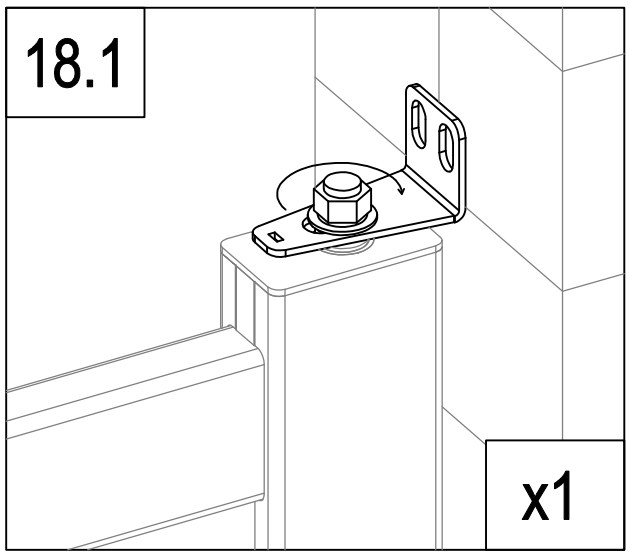

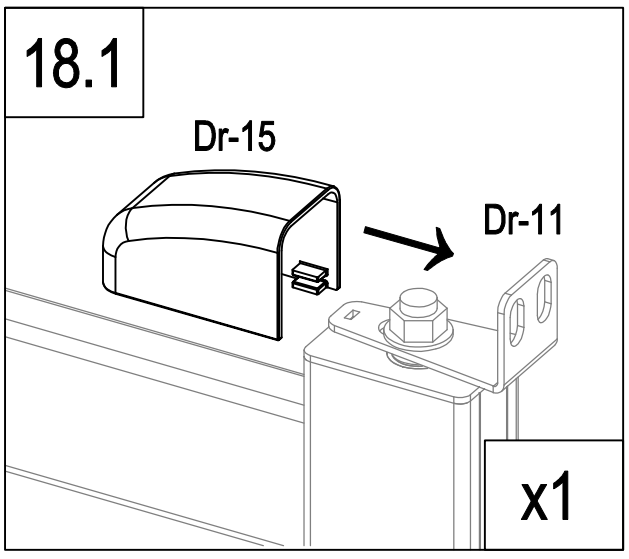

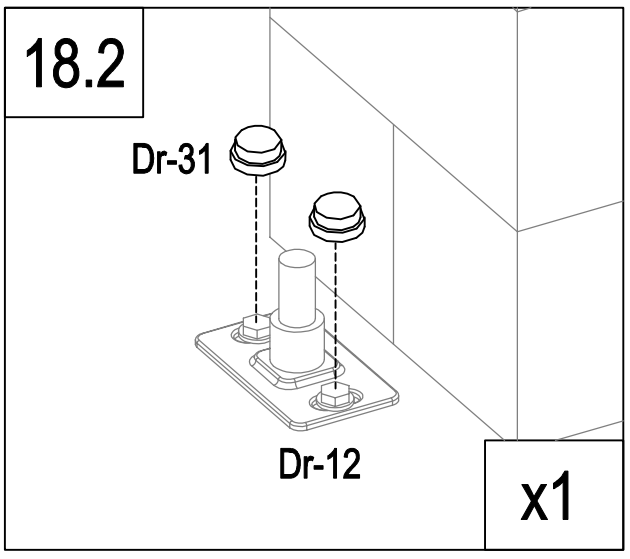

	Dr-15	1
	Dr-31	2

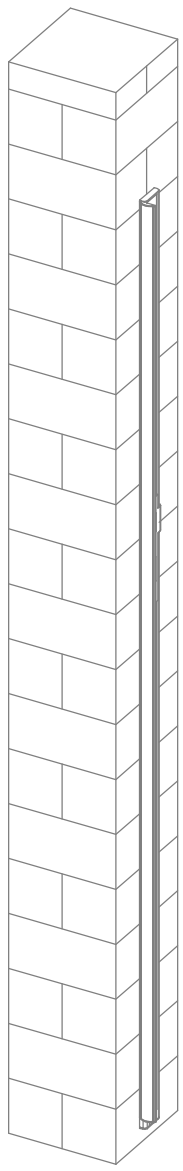

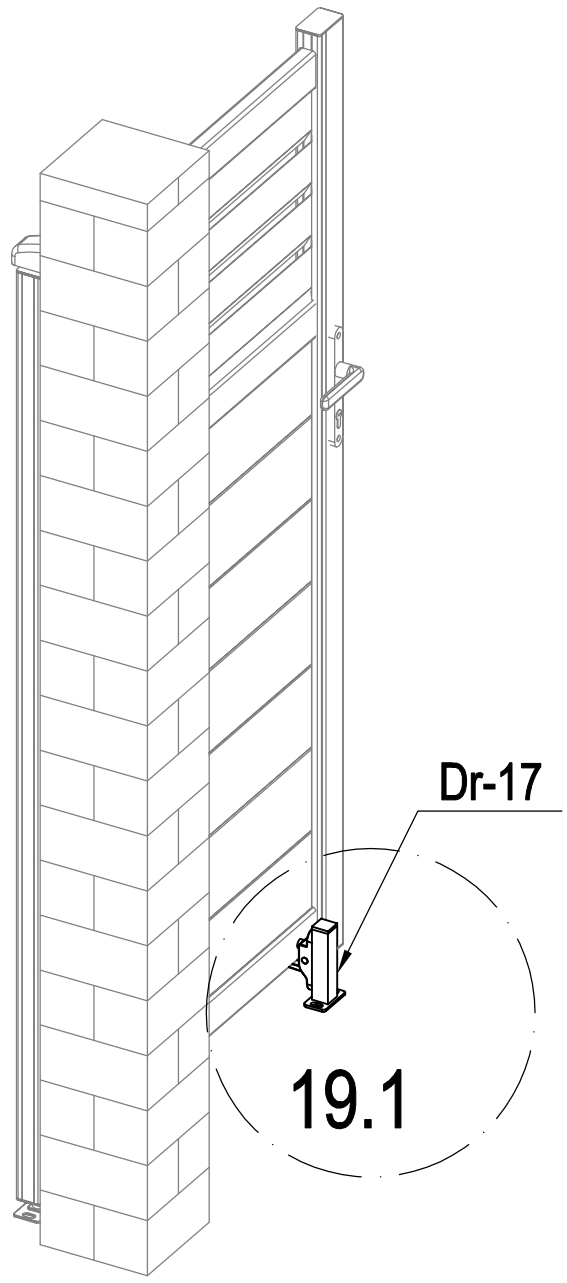

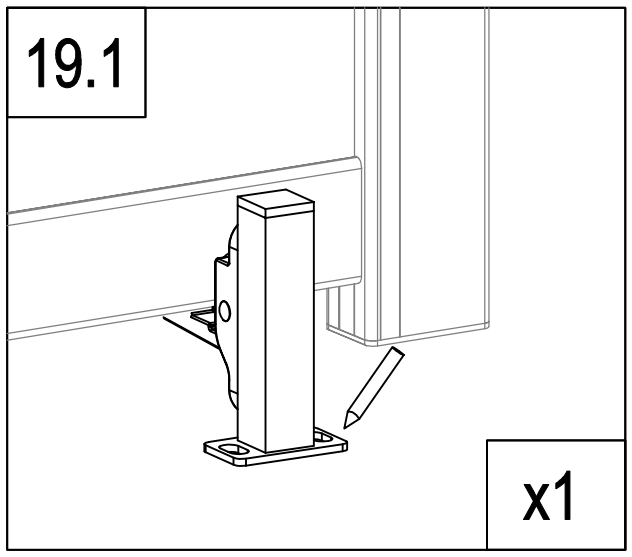

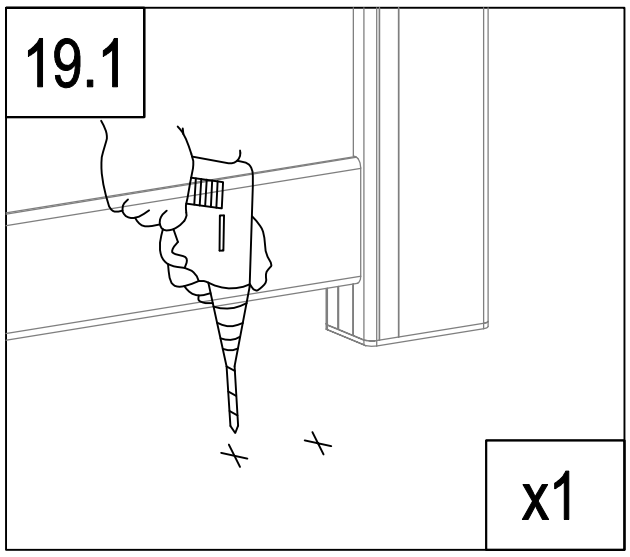

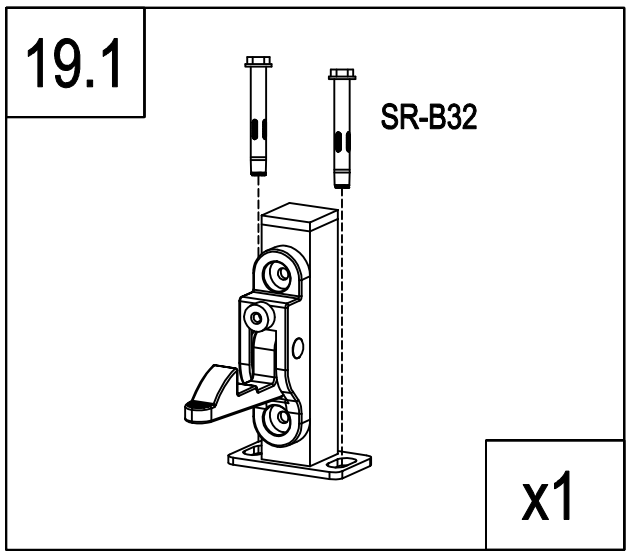

	SR-B32	2
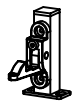	Dr-17	1