# OVARO

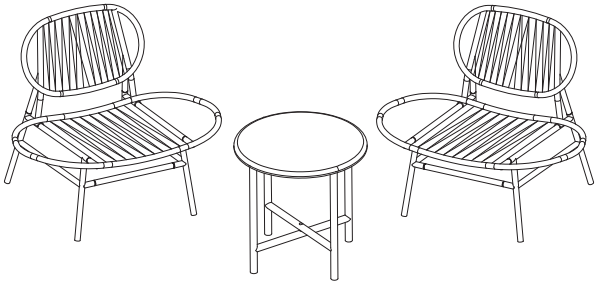

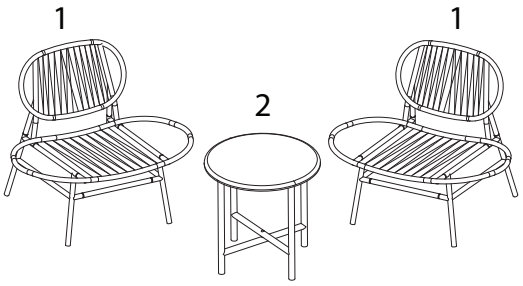
1
2
1

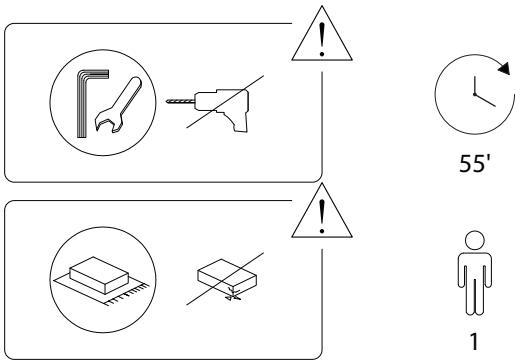
55'
1







## 1 x 2

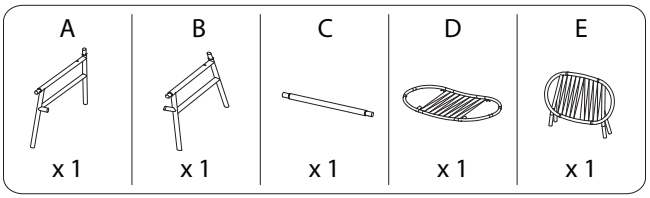
A
x 1
B
x 1
C
x 1
D
x 1
E
x 1

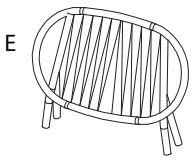
E

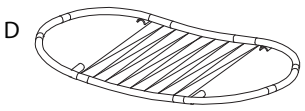
D

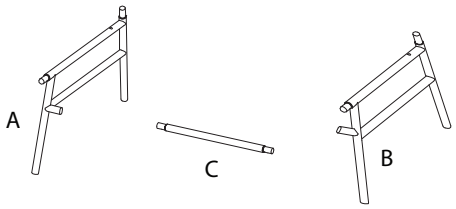
A
C
B

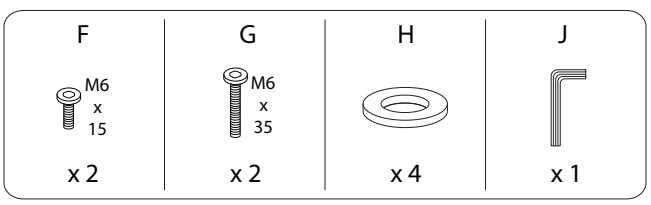
F
M6
x
15
x 2
G
M6
x
35
x 2
H
x 4
J
x 1

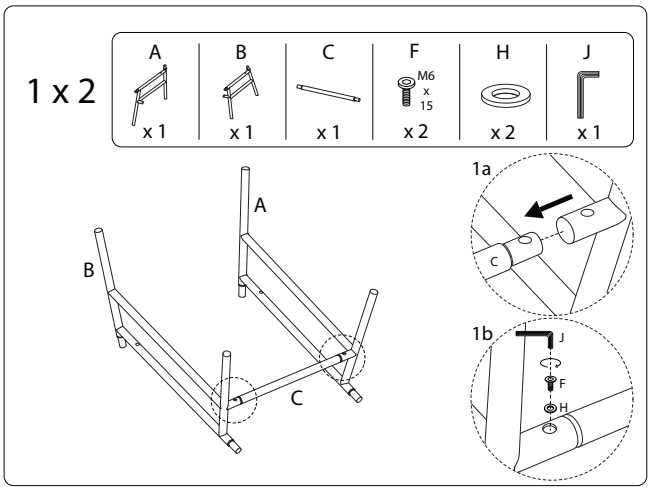
1 x 2
A
x 1
B
x 1
C
x 1
F
M6
x
15
x 2
H
x 2
J
x 1
A
B
C
1a
C
1b
J
F
H

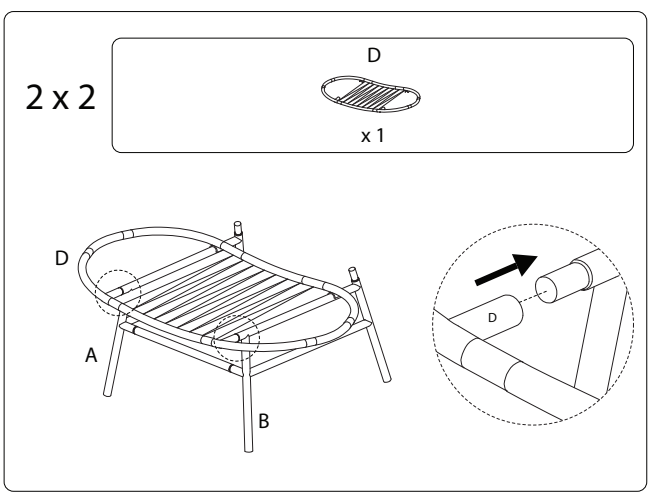
2 x 2
D
x 1
D
A
B
D

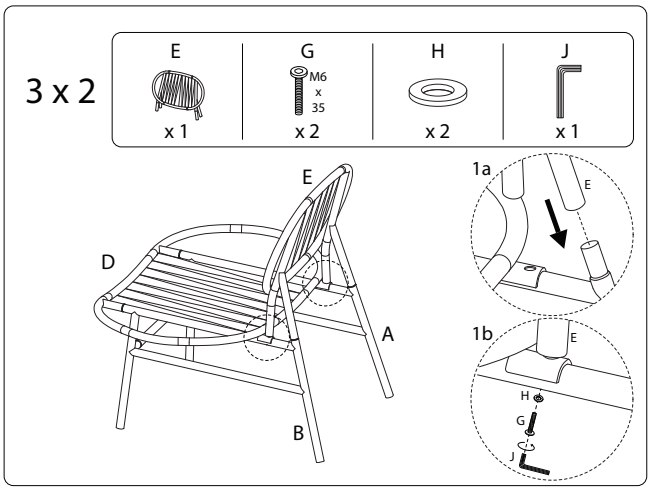
3 x 2
E
x 1
G
M6
x
35
x 2
H
x 2
J
x 1
E
D
A
B
1a
E
1b
E
H
G
J







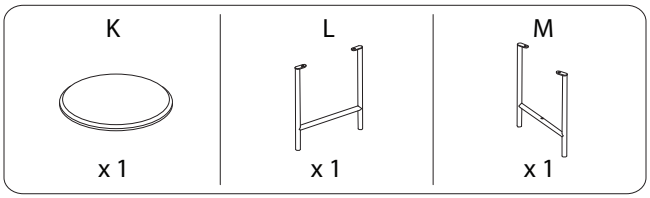
K
x 1
L
x 1
M
x 1

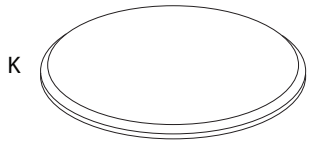
K

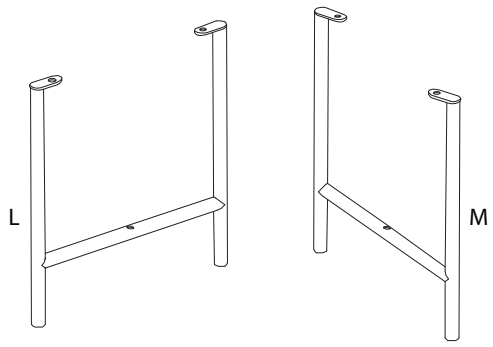
L
M

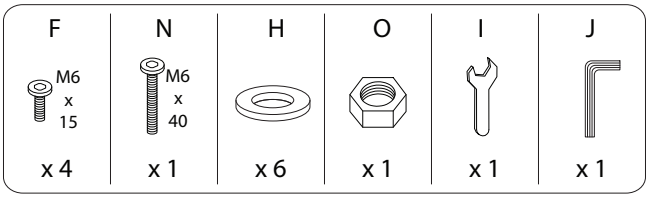
F
M6
x
15
x 4
N
M6
x
40
x 1
H
x 6
O
x 1
I
x 1
J
x 1





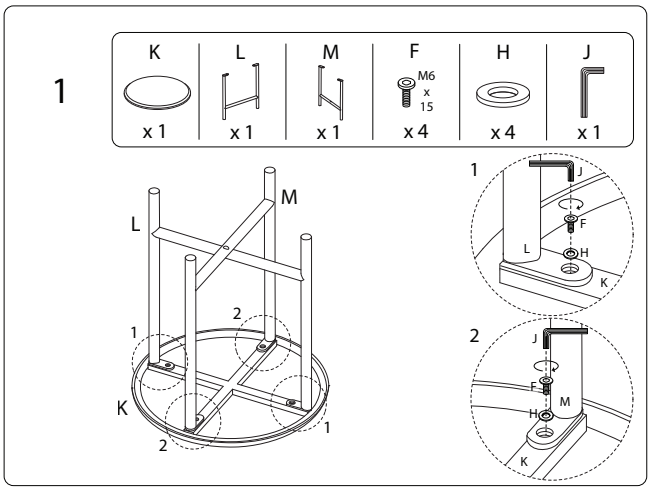
1
K
x 1
L
x 1
M
x 1
F
M6
x
15
x 4
H
x 4
J
x 1
M
L
1
2
K
2
1
1
J
F
L
H
K
2
J
F
M
H
K

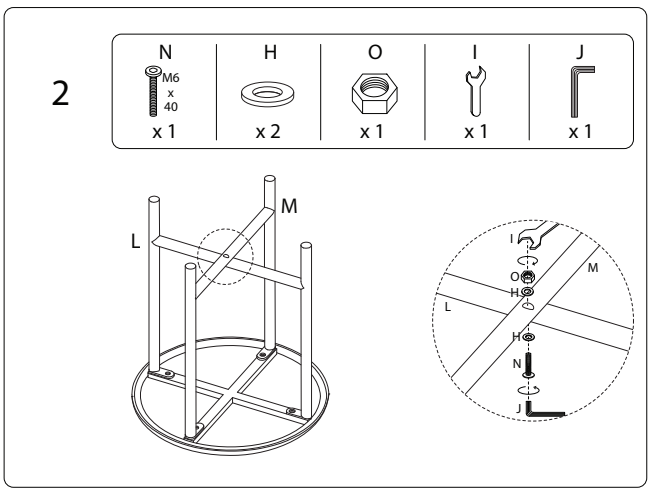
2
N
M6
x
40
x 1
H
x 2
O
x 1
I
x 1
J
x 1
M
L
I
O
H
M
L
H
N
J