CASANOOV

NEVIS 100P140

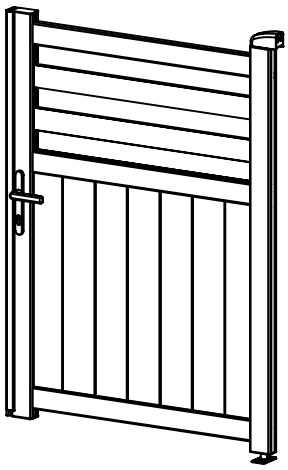

3-5H

x2

STI-000096 [x1]

FR EN ES DE IT NL PL PT FI SE DK CE

NOTICE DE MONTAGE / INSTRUCTION MANUAL / MANUAL DE MONTAJE / MONTAGEANLEITUNG / MANUALE DI MONTAGGIO / MONTAGEHANDLEIDING / INSTRUKCJA MONTAŻU

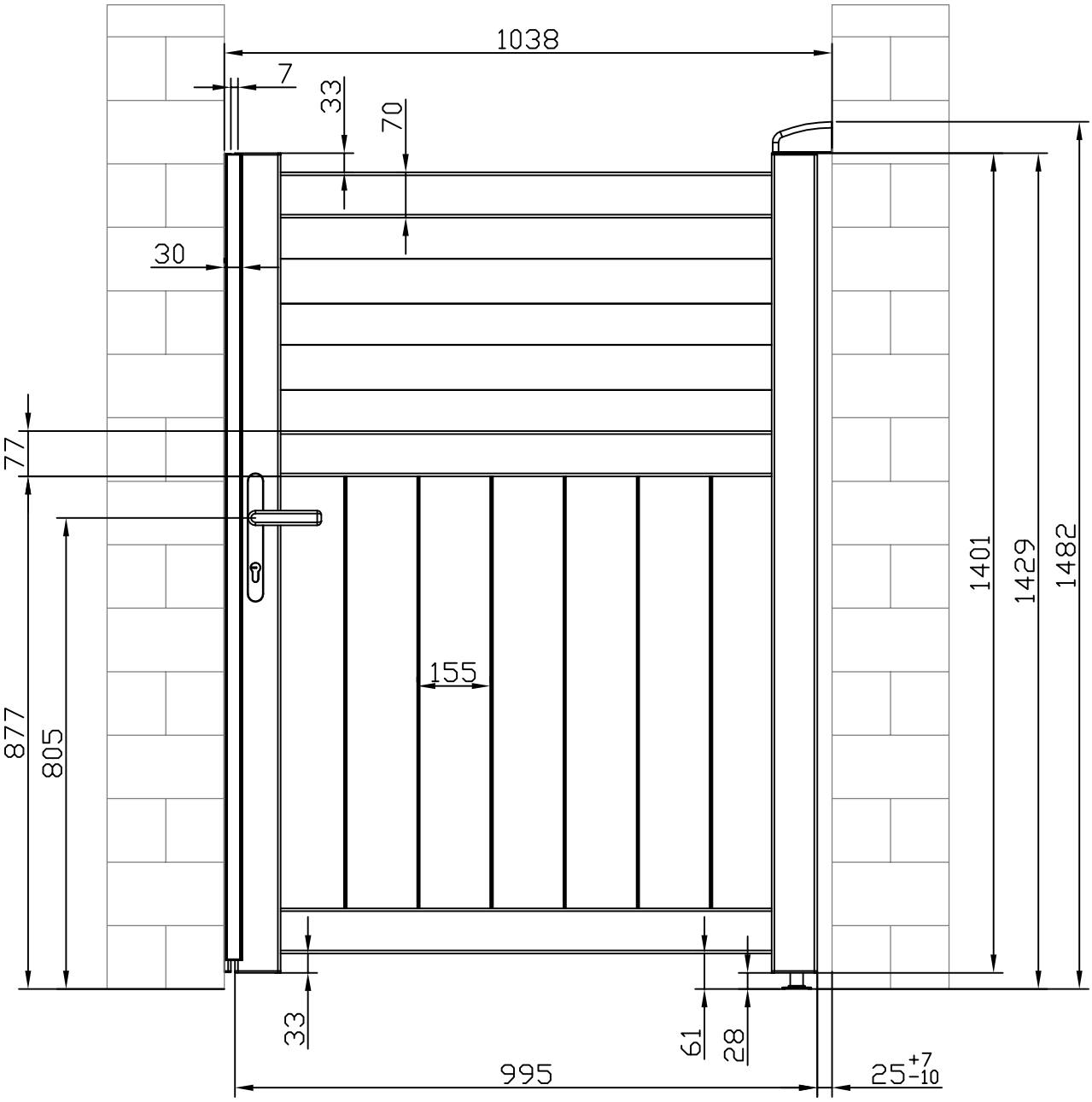
1038
7
33
70
30
77
877
805
155
1401
1429
1482
33
61
28
995
25+7-10

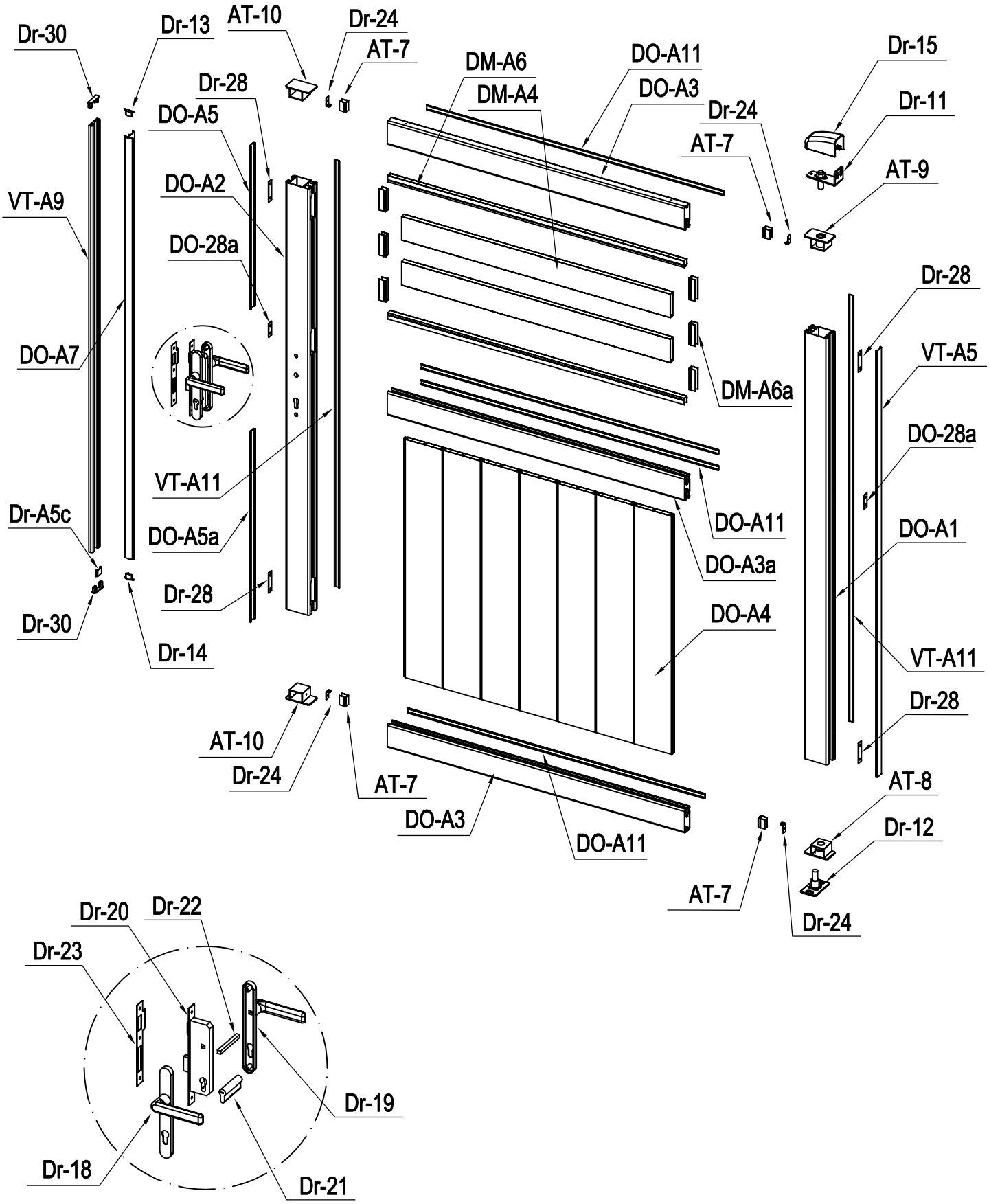
Dr-30
Dr-13
AT-10
Dr-24
AT-7
DM-A6
DO-A11
Dr-15
Dr-28
DM-A4
DO-A3
Dr-11
DO-A5
Dr-24
AT-7
AT-9
DO-A2
VT-A9
DO-28a
Dr-28
DO-A7
VT-A5
DM-A6a
DO-28a
VT-A11
DO-A11
Dr-A5c
DO-A5a
DO-A1
DO-A3a
Dr-28
DO-A4
Dr-30
Dr-14
VT-A11
Dr-28
AT-10
Dr-24
AT-7
AT-8
DO-A3
DO-A11
Dr-12
AT-7
Dr-24
Dr-20
Dr-22
Dr-23
Dr-19
Dr-18
Dr-21

PART LIST

IMAGE	NO.	L.(mm)	QTY	IMAGE	NO.	L.(mm)	QTY
	DO-A1	1395	1		Dr-18		1
	DO-A2	1395	1		Dr-19		1
	DO-A3	972	2		Dr-20		1
	DO-A3a	972	1		Dr-21		1
	DO-A4	779	7		Dr-22		1
	DM-A4	879	2		Dr-23		1
	VT-A5	1395	1		Dr-25		1
	DO-A5	532.5	1		Dr-25a		2
	DO-A5a	622	1		Dr-26		3
	Dr-A5c	19.5	1		Dr-27		2
	VT-A11	1395	2		Dr-24		4
	DO-A11	972	4		Dr-28		4
	AT-7	29.5	4		DO-28a		2
	DM-A6	970	2		DM-A30		4
	DM-A6a	69	6		DM-A31		12
	DO-A7	1375	1		DM-A32		10
	VT-A9	1395	1		DM-A33		6
	DO-A15	970	1		DM-A34		3
	AT-8		1		DM-A35		18
	AT-9		1				
	AT-10		2				
	Dr-11		1				
	Dr-12		1				
	Dr-13		1				
	Dr-14		1				
	Dr-15		1				
	Dr-17		1				
	Dr-30		2				
	Dr-31		2				
	DO-30		4				

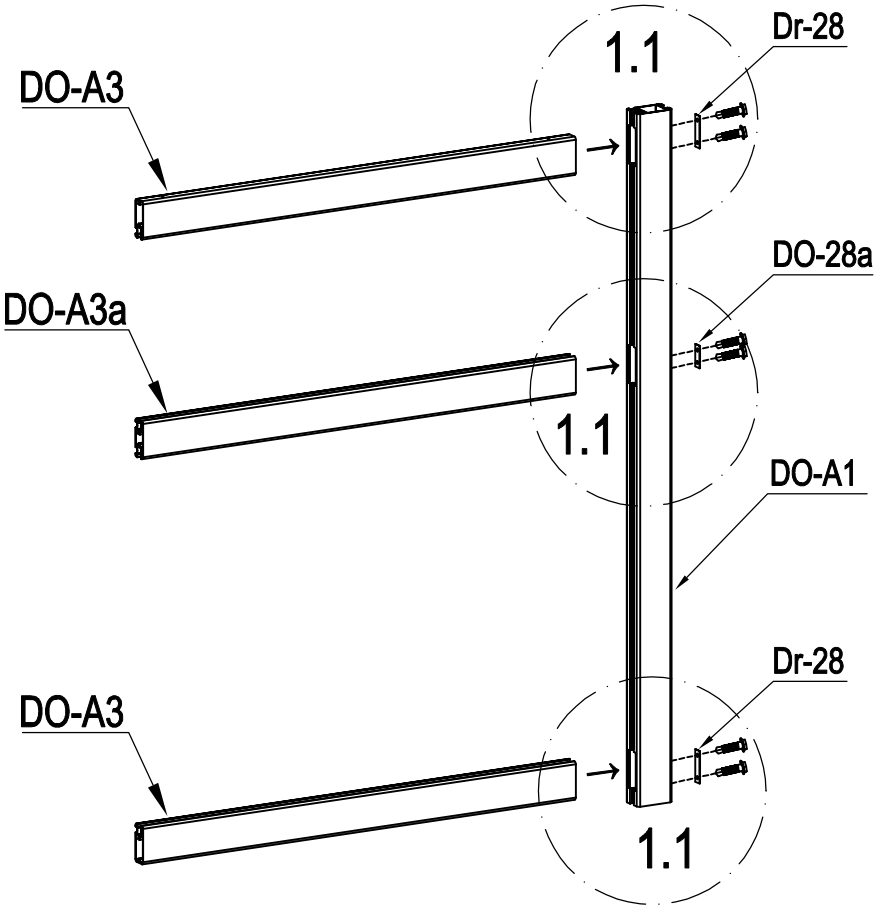

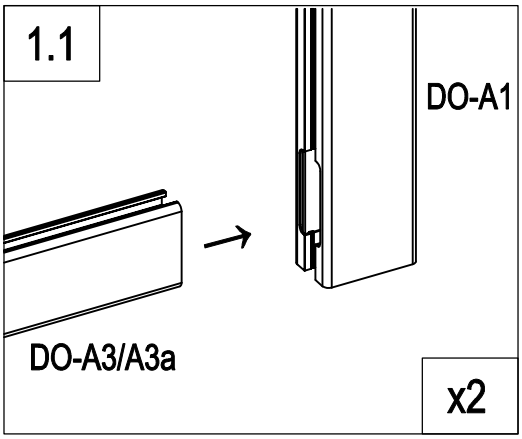

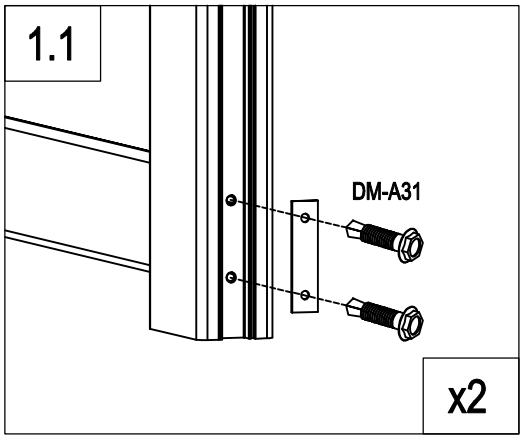

	DO-A1	1
	DO-A3	2
	DO-A3a	1

	Dr-28	2
	DO-28a	1
	DM-A31	6

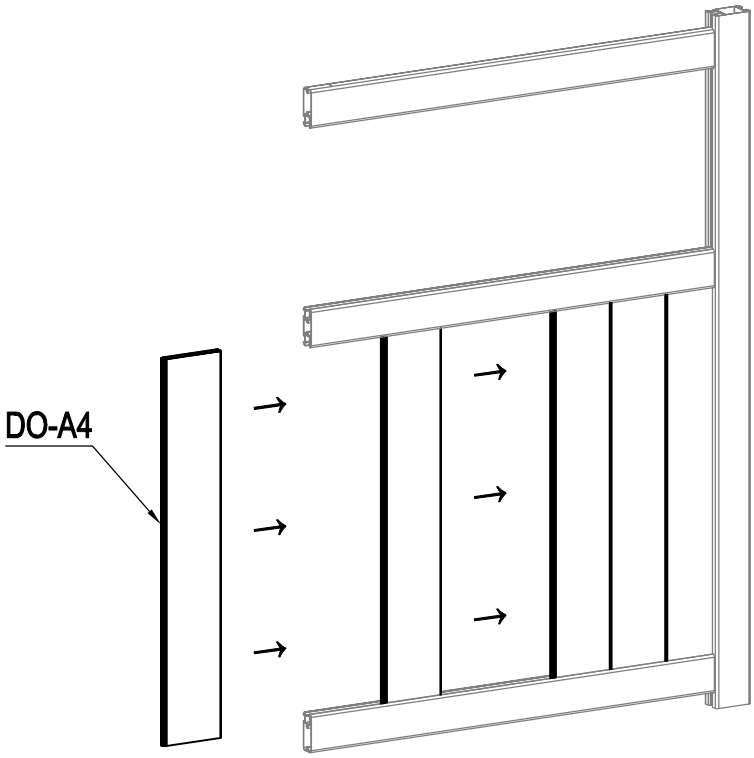

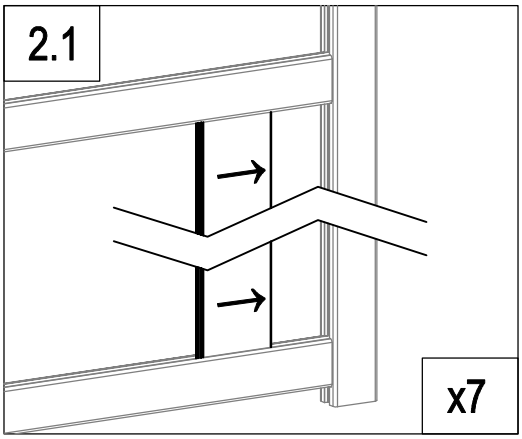

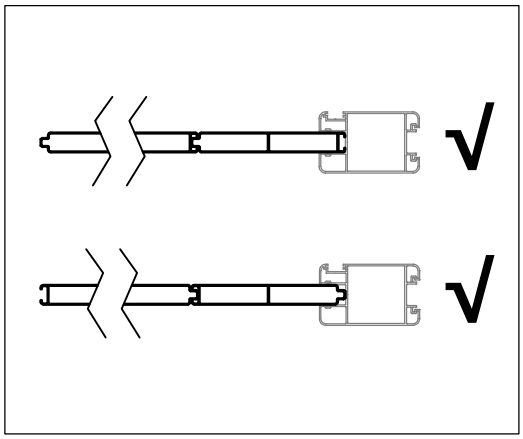

	DO-A4	7

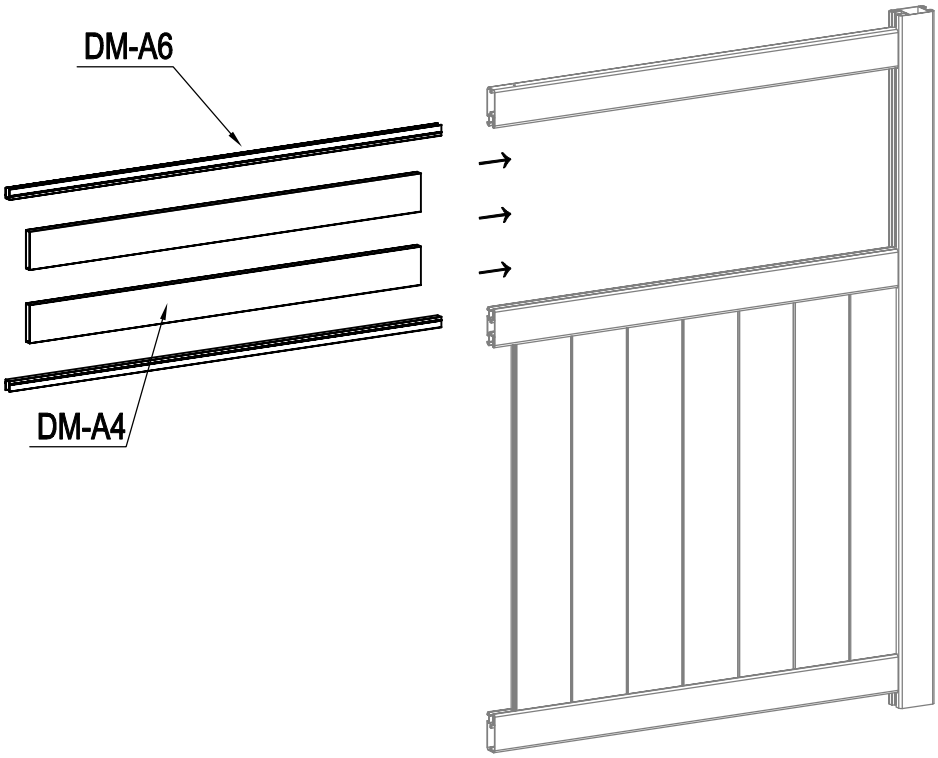

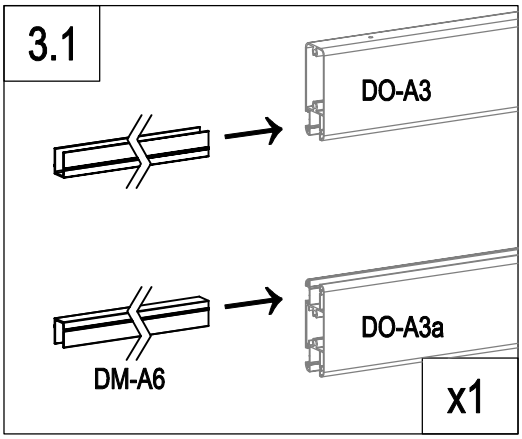

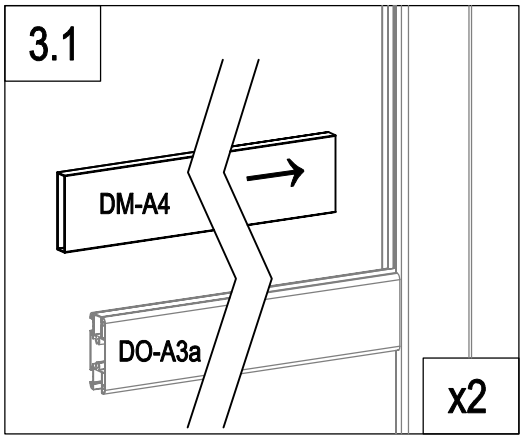

	DM-A4	2
	DM-A6	2

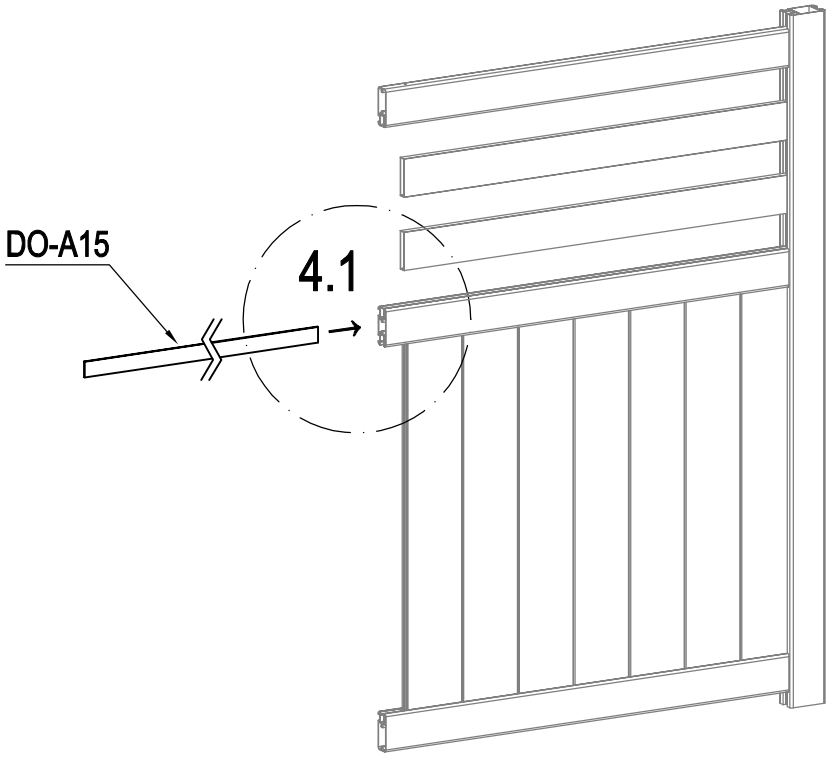

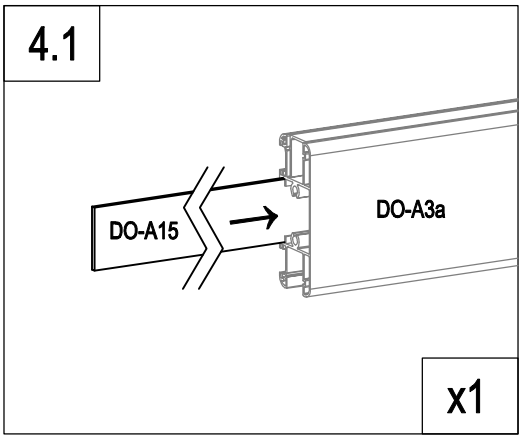

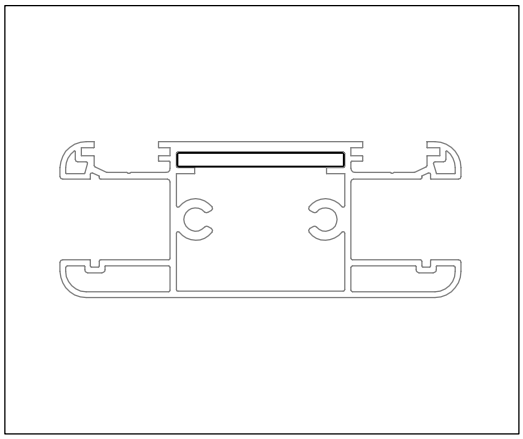

	DO-A15	1

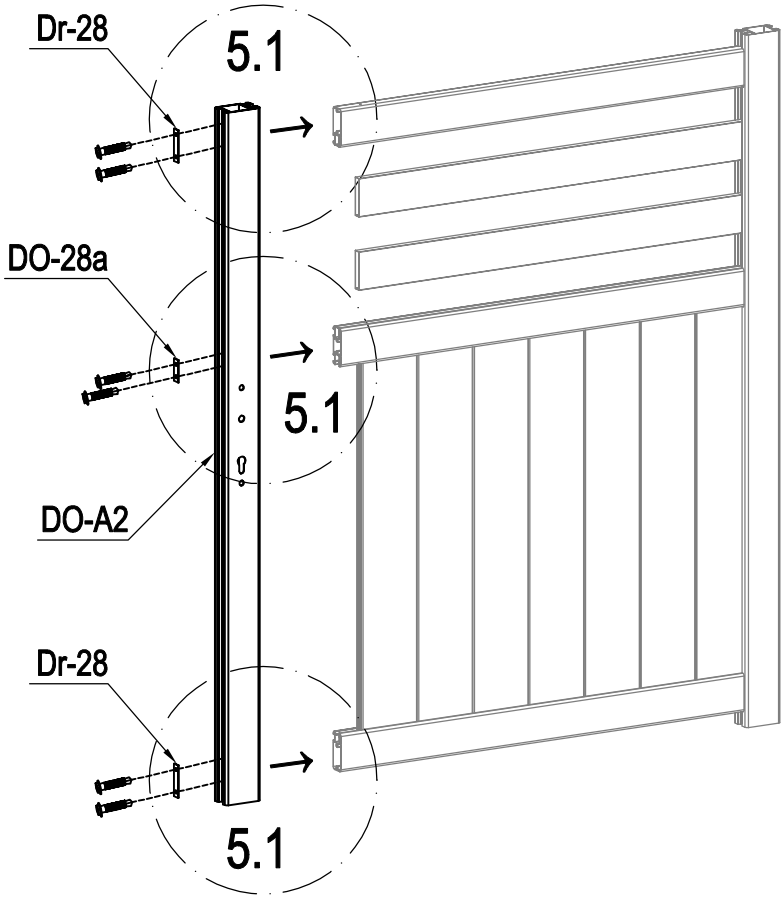

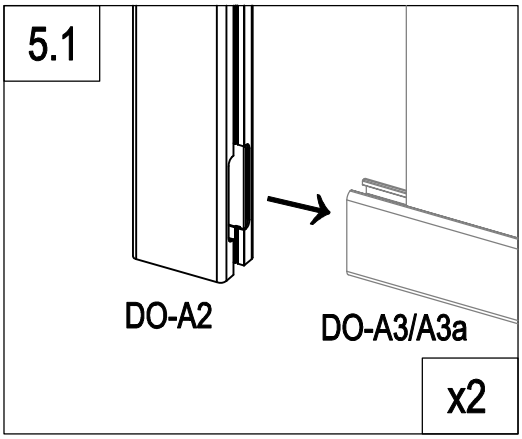

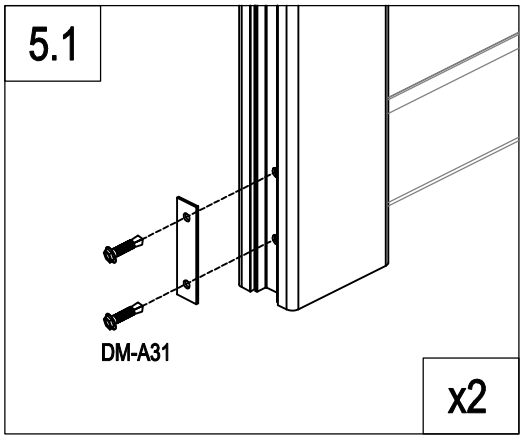

	DO-A2	1
	Dr-28	2
	DO-28a	1
	DM-A31	6

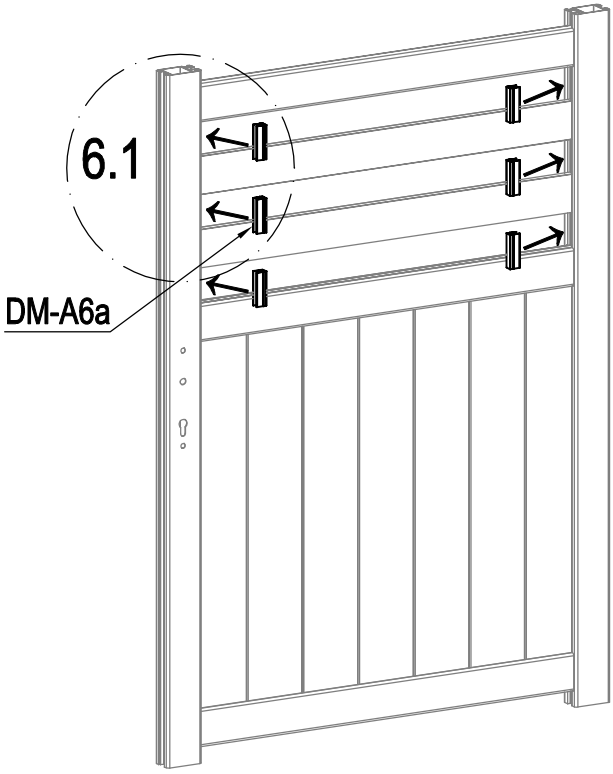

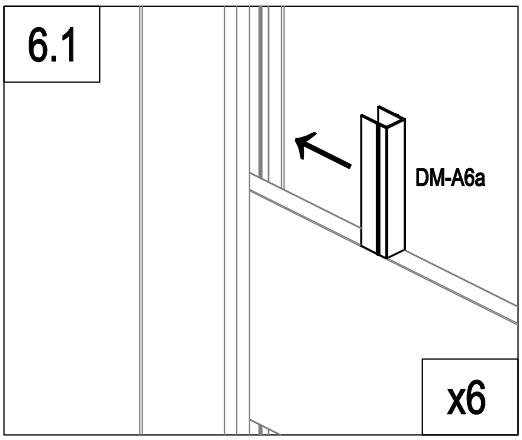

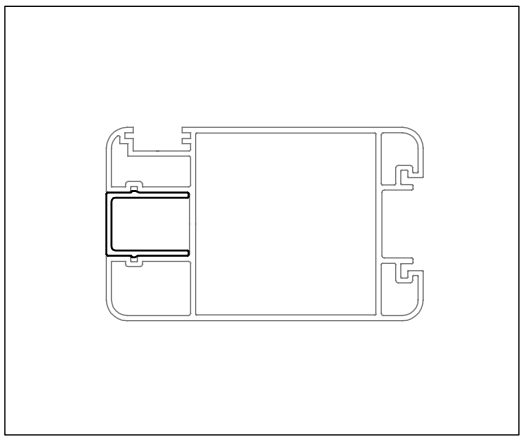

	DM-A6a	6

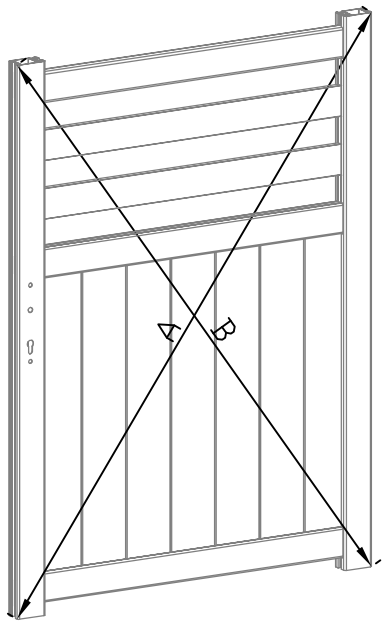

A=B

180°

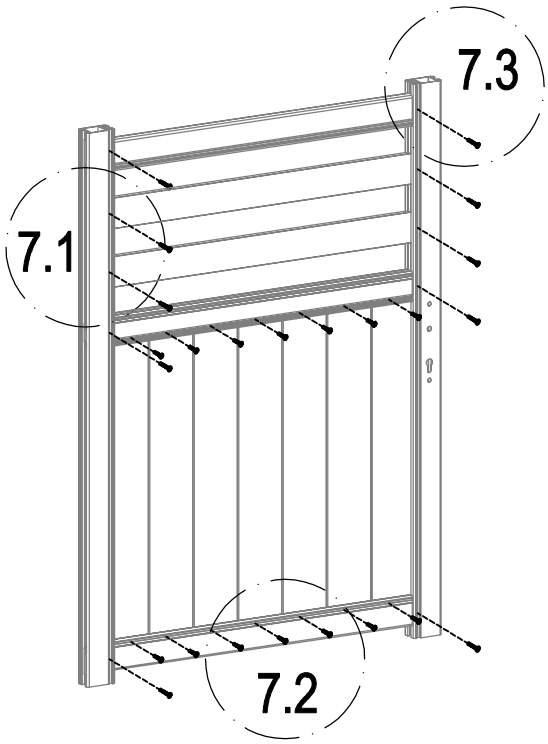

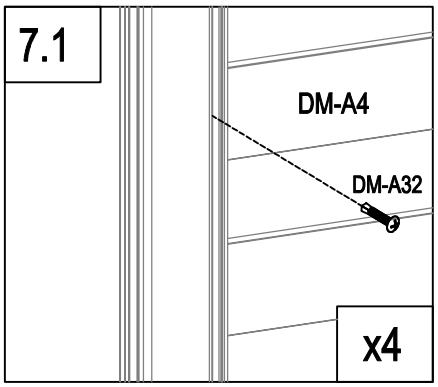

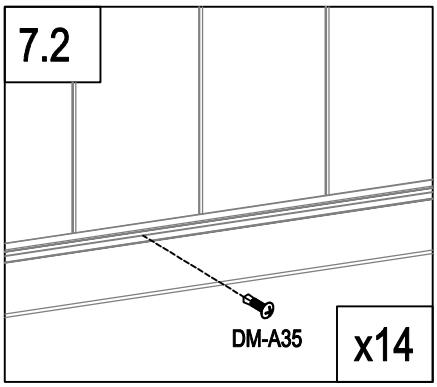

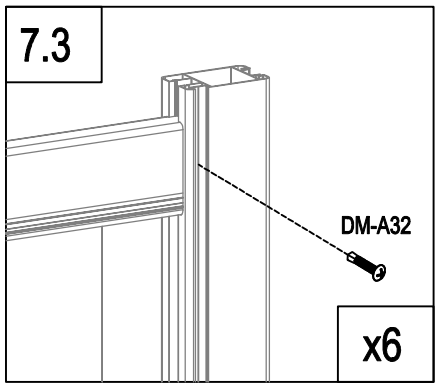

	DM-A35	14
	DM-A32	10

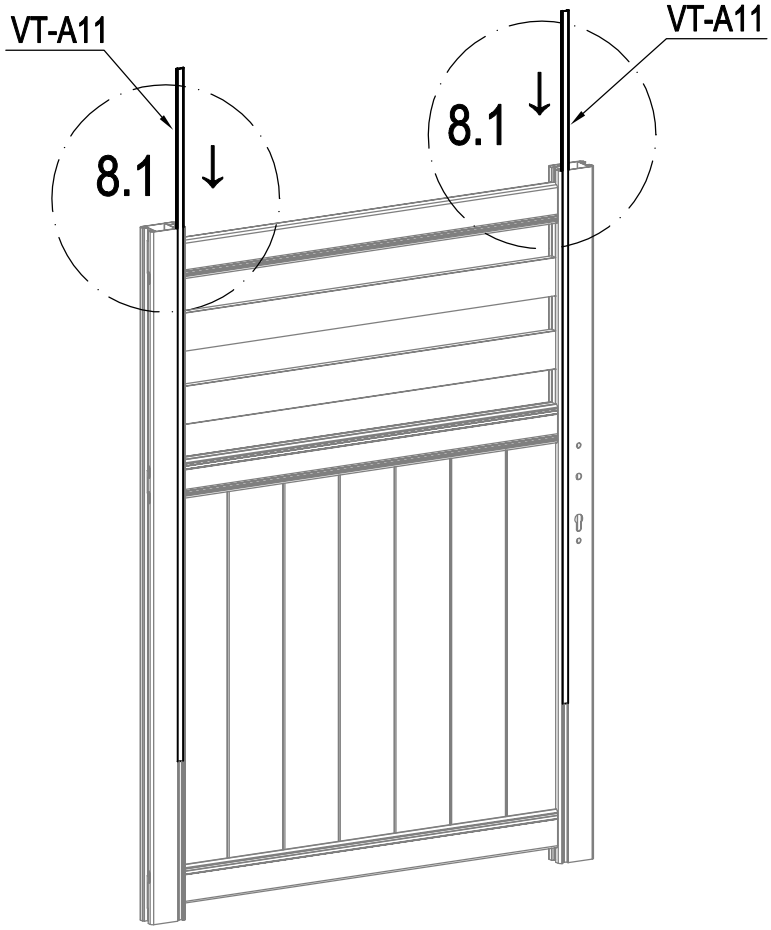

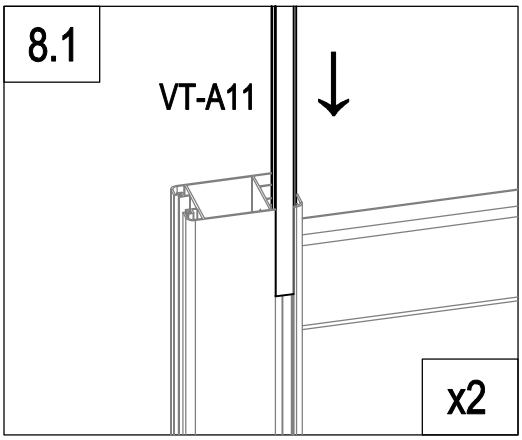

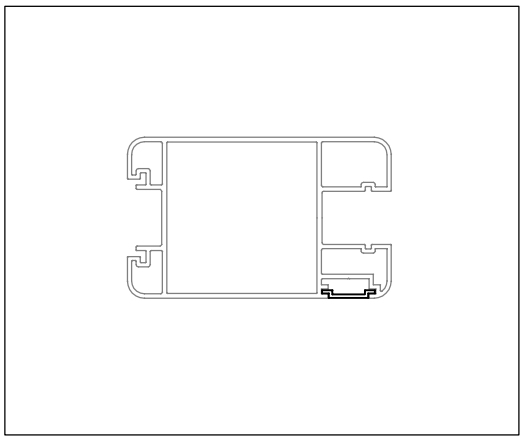

	VT-A11	2

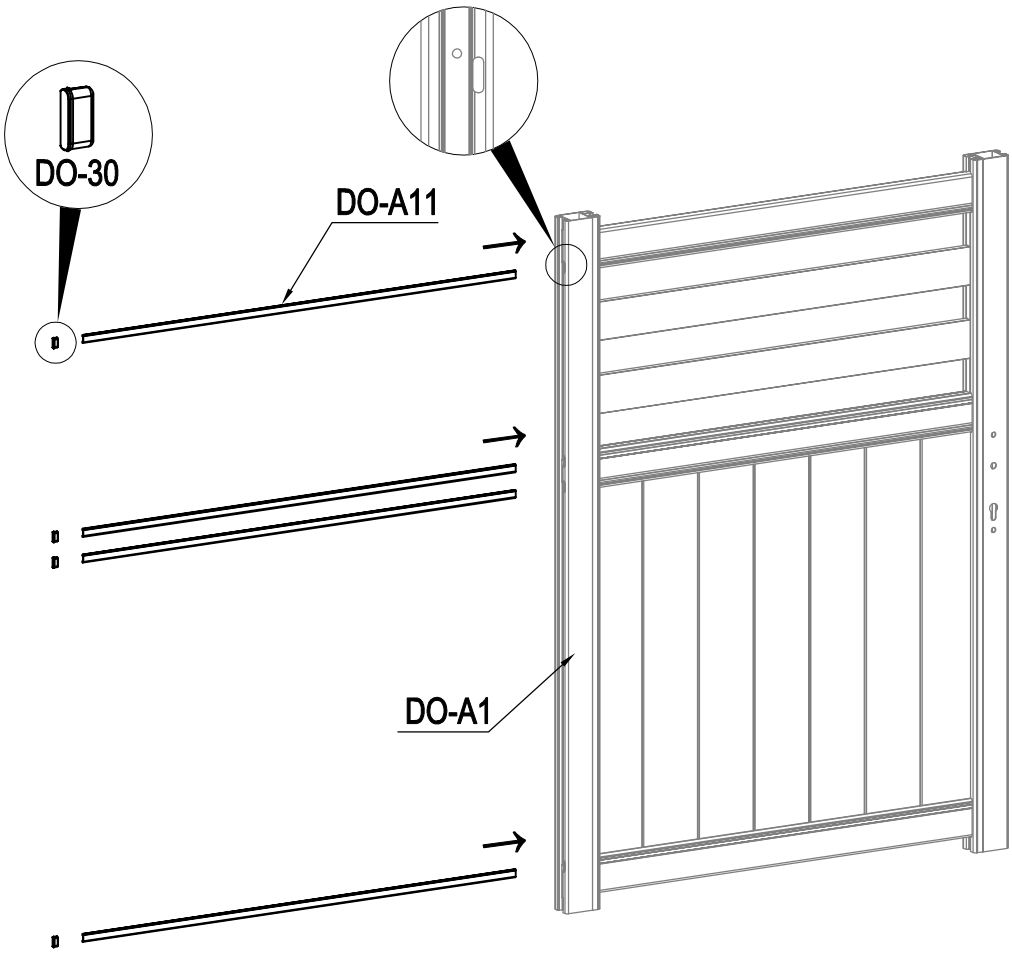

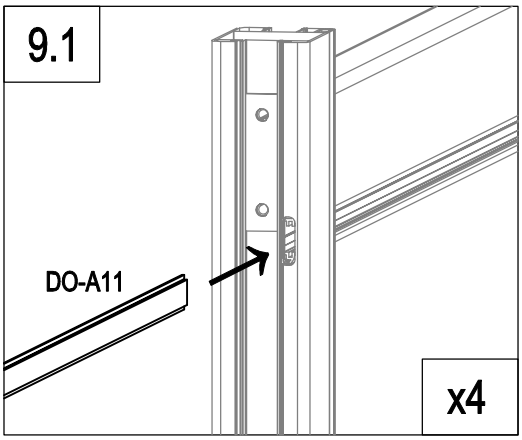

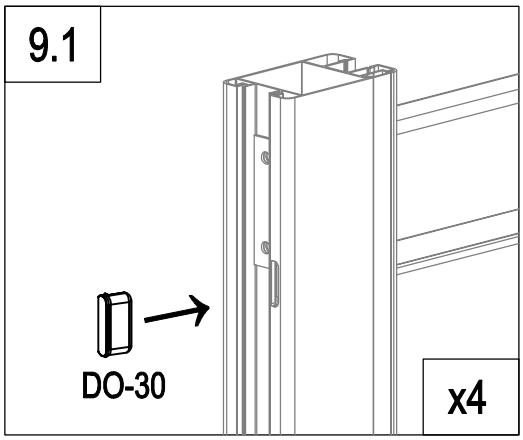

	DO-A11	4
	DO-30	4

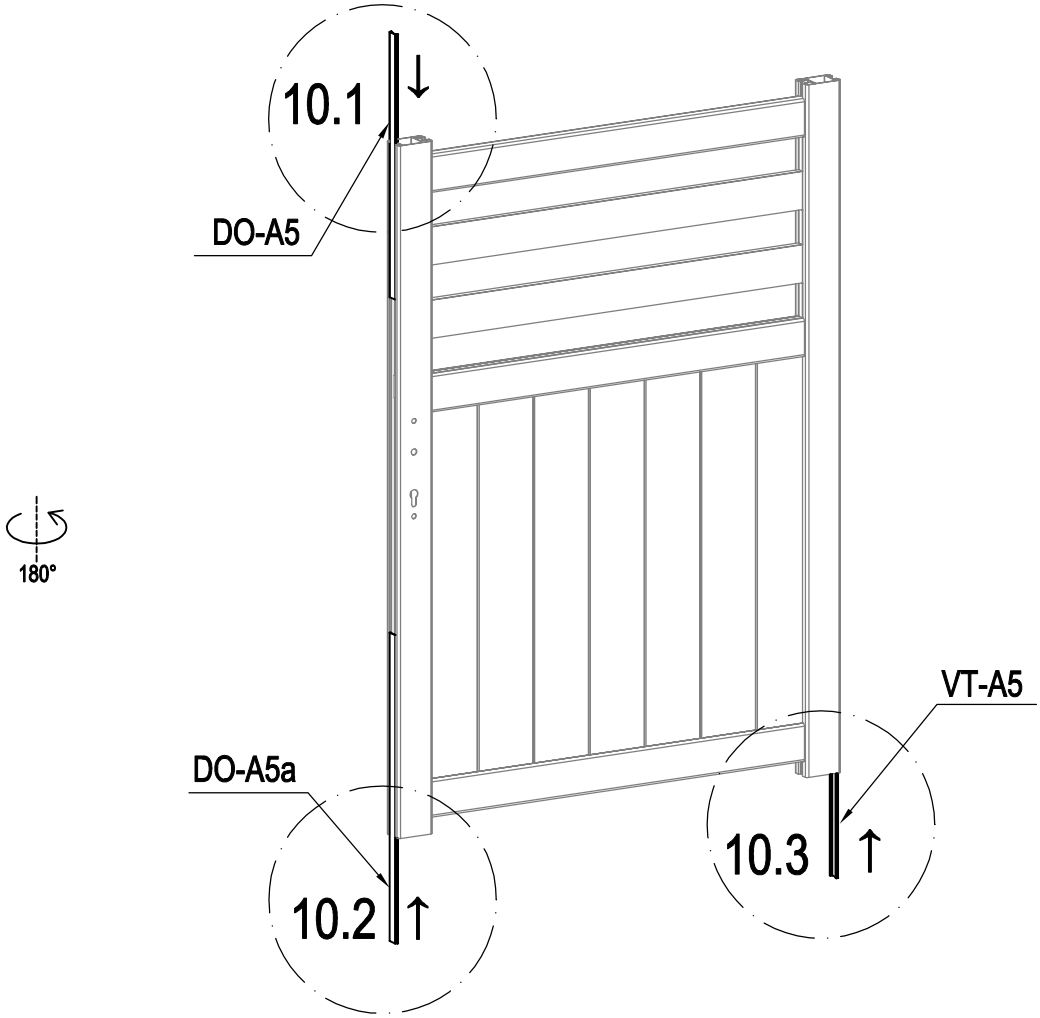

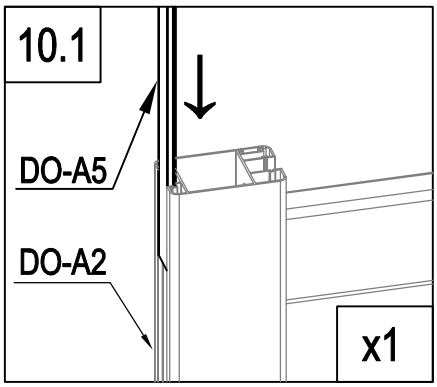

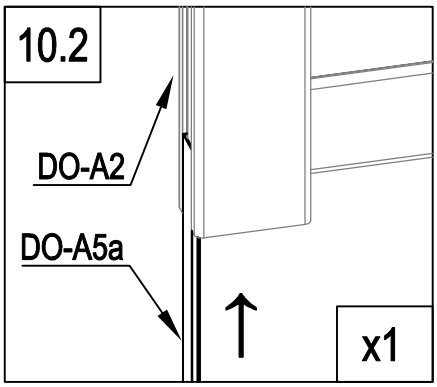

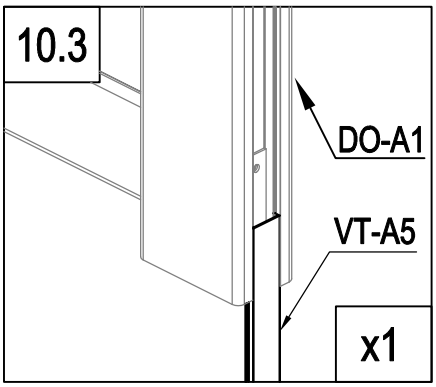

	VT-A5	1
	DO-A5	1
	DO-A5a	1

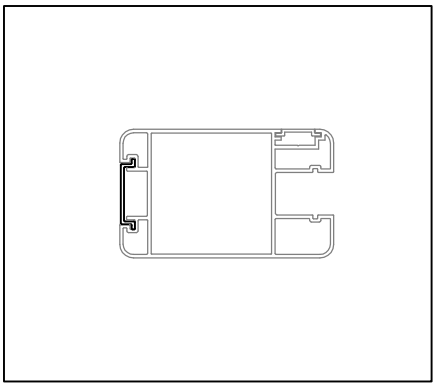

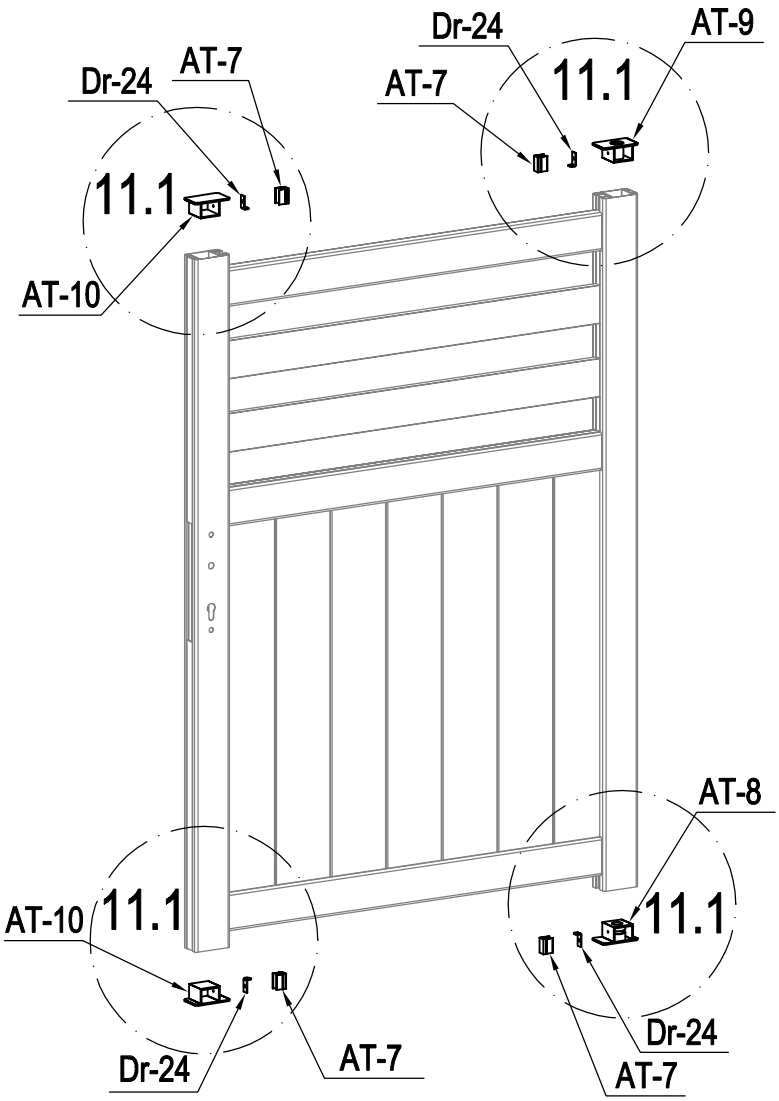

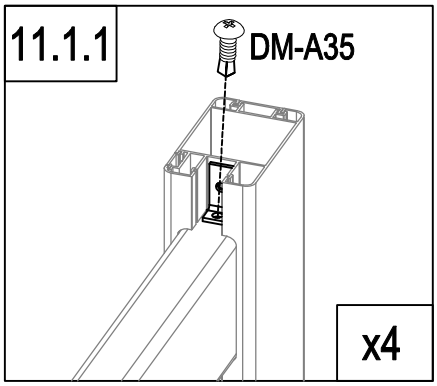

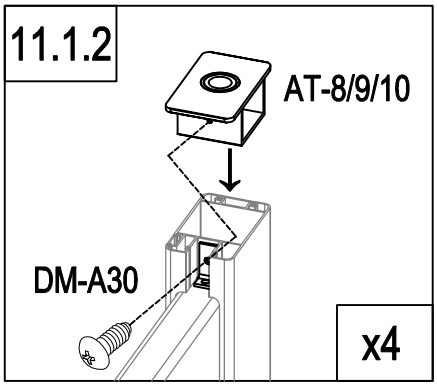

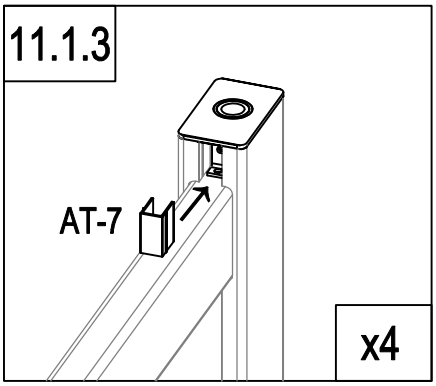

	AT-8	1
	AT-9	1
	AT-10	2
	Dr-24	4

	AT-7	4
	DM-A30	4
	DM-A35	4

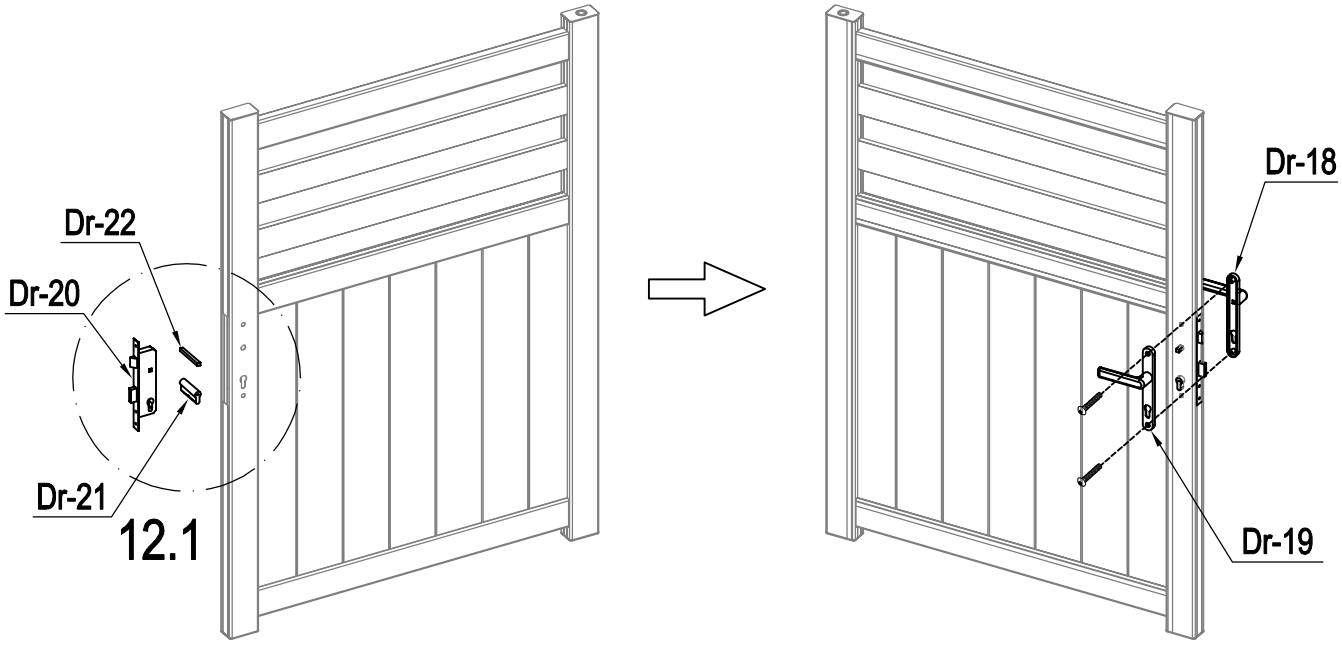

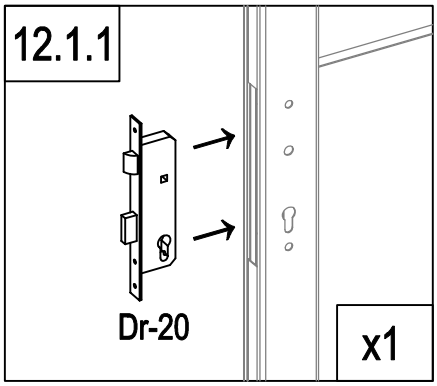

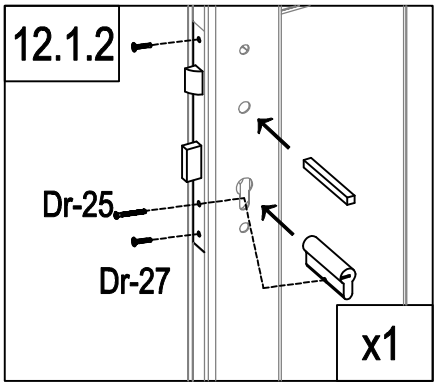

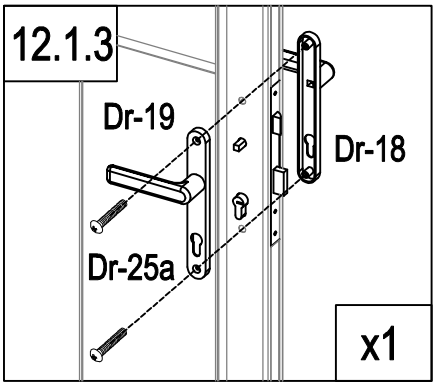

	Dr-20	1
	Dr-21	1
	Dr-22	1
	Dr-25	1

	Dr-18	1
	Dr-19	1
	Dr-25a	2
	Dr-27	2

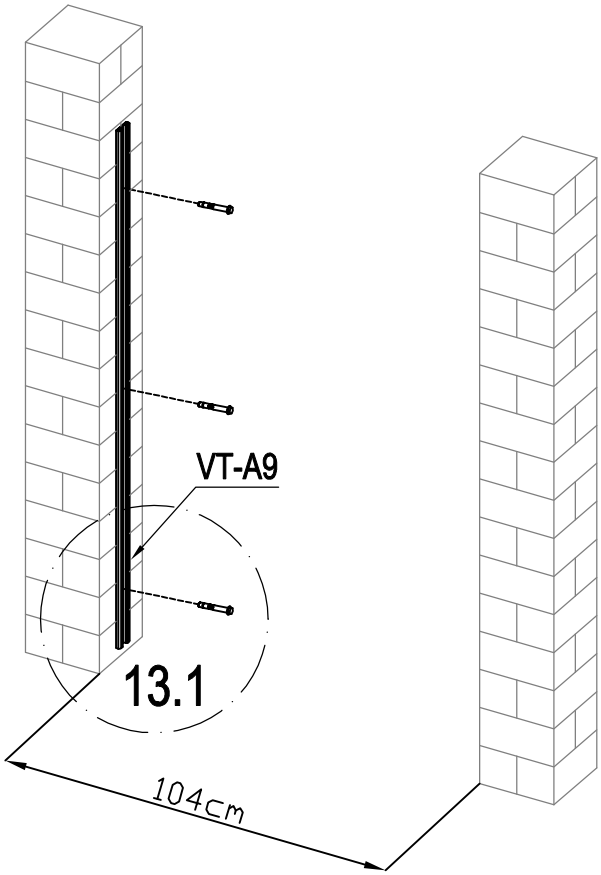

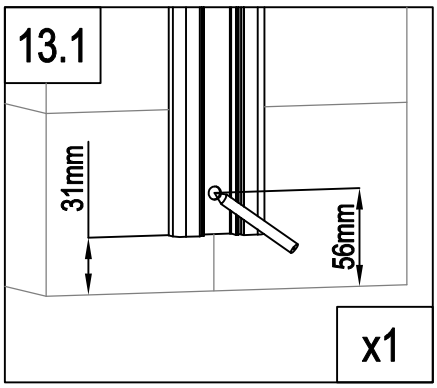

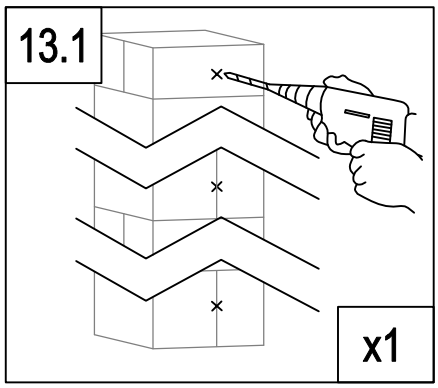

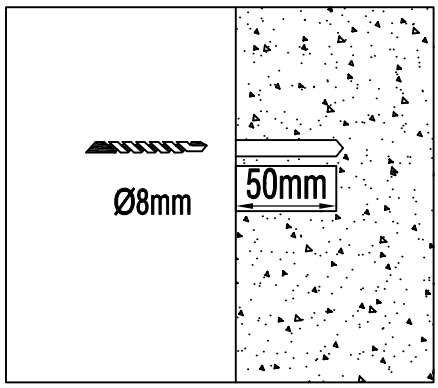

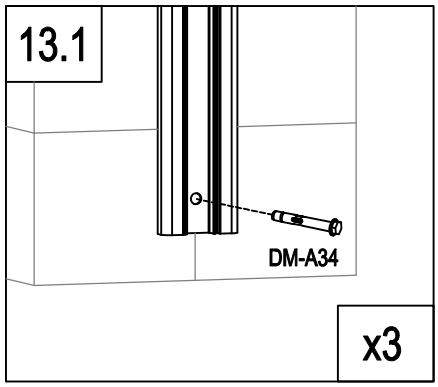

	VT-A9	1
	DM-A34	3

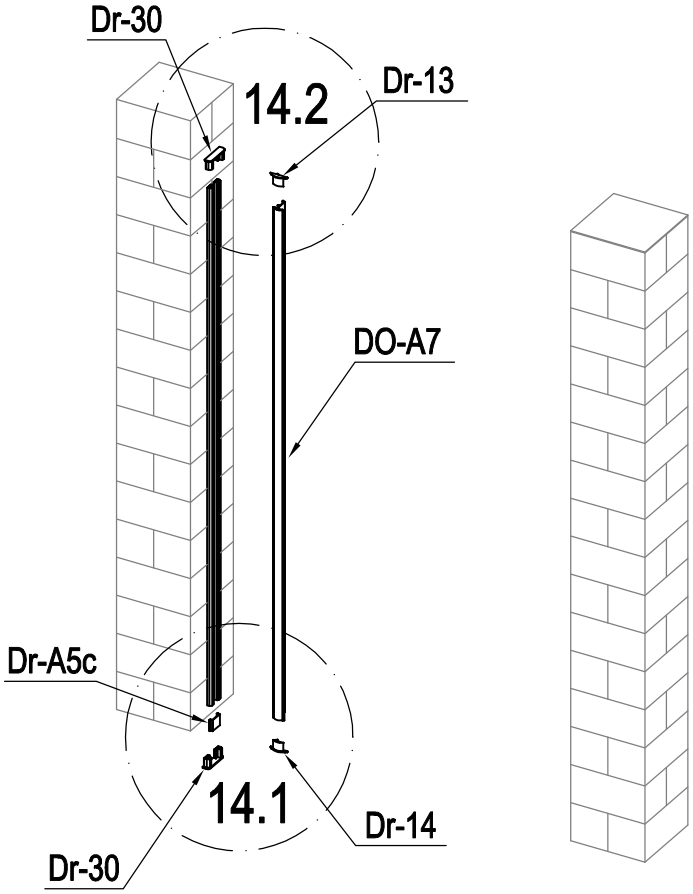

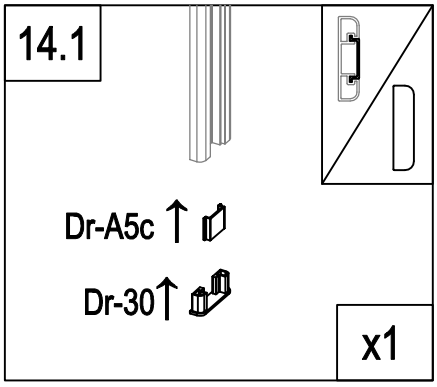

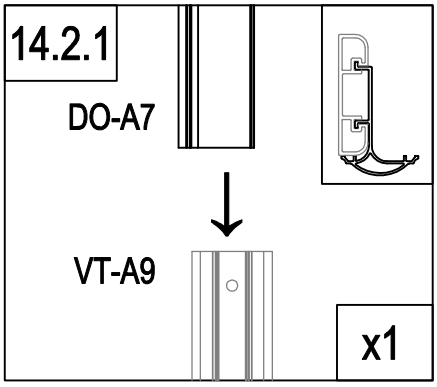

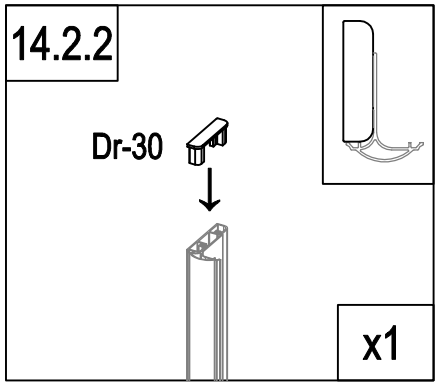

	DO-A7	1
	Dr-13	1
	Dr-14	1
	Dr-30	2
	Dr-A5c	1

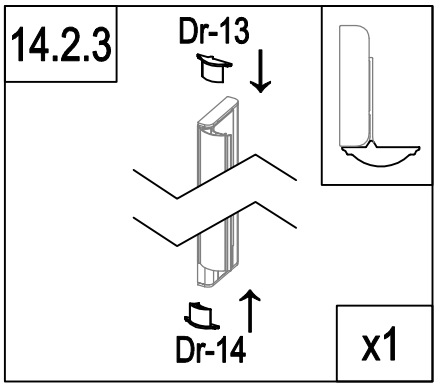

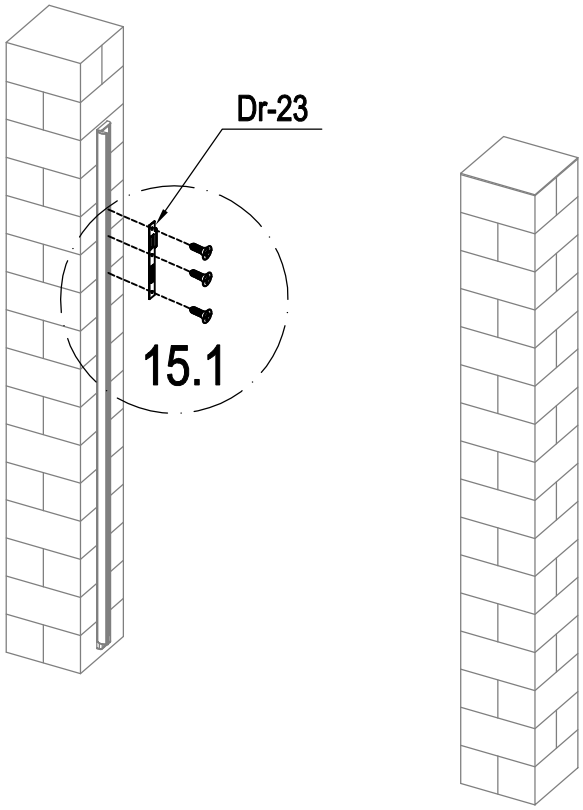

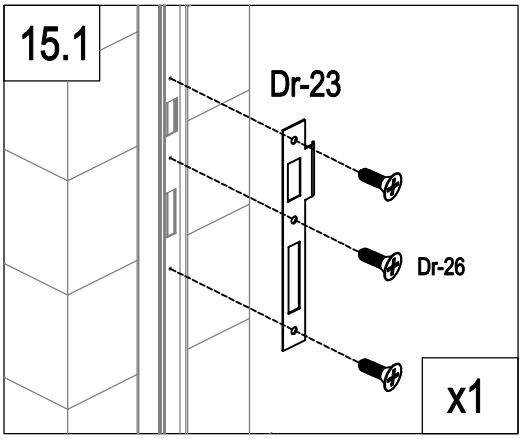

	Dr-23	1
	Dr-26	3

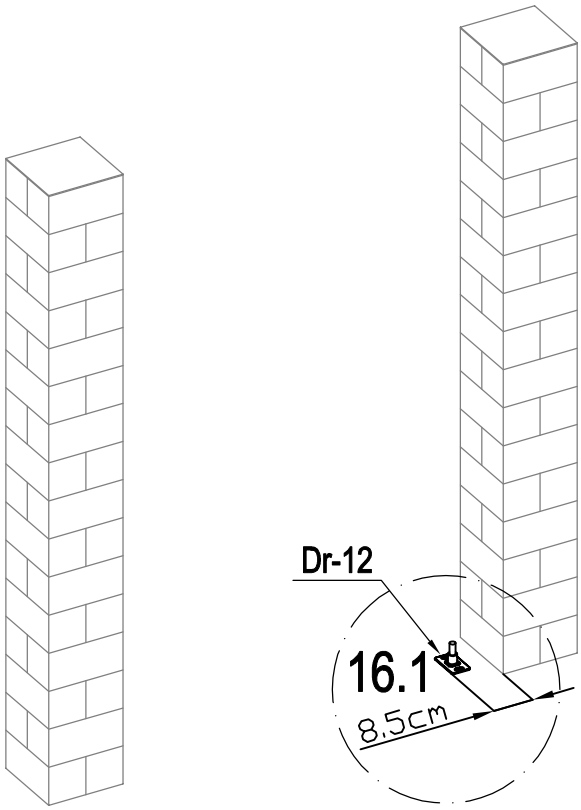

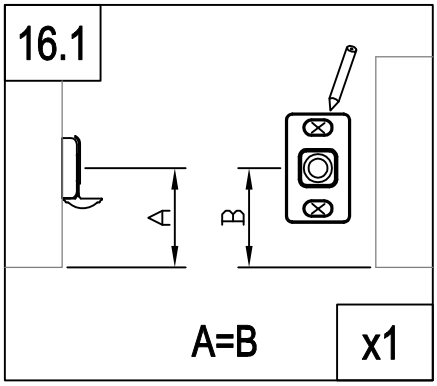

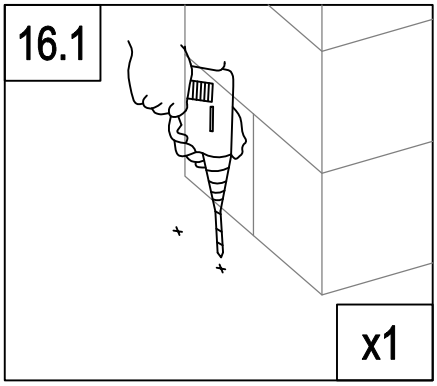

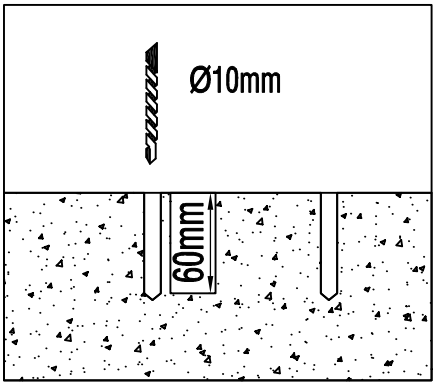

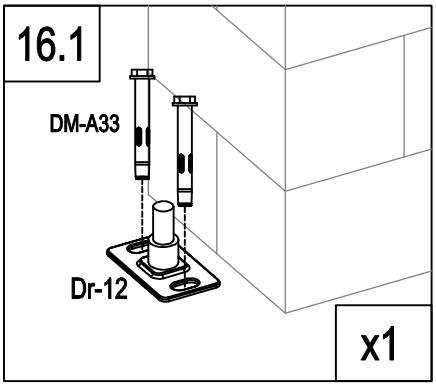

	Dr-12	1
	DM-A33	2

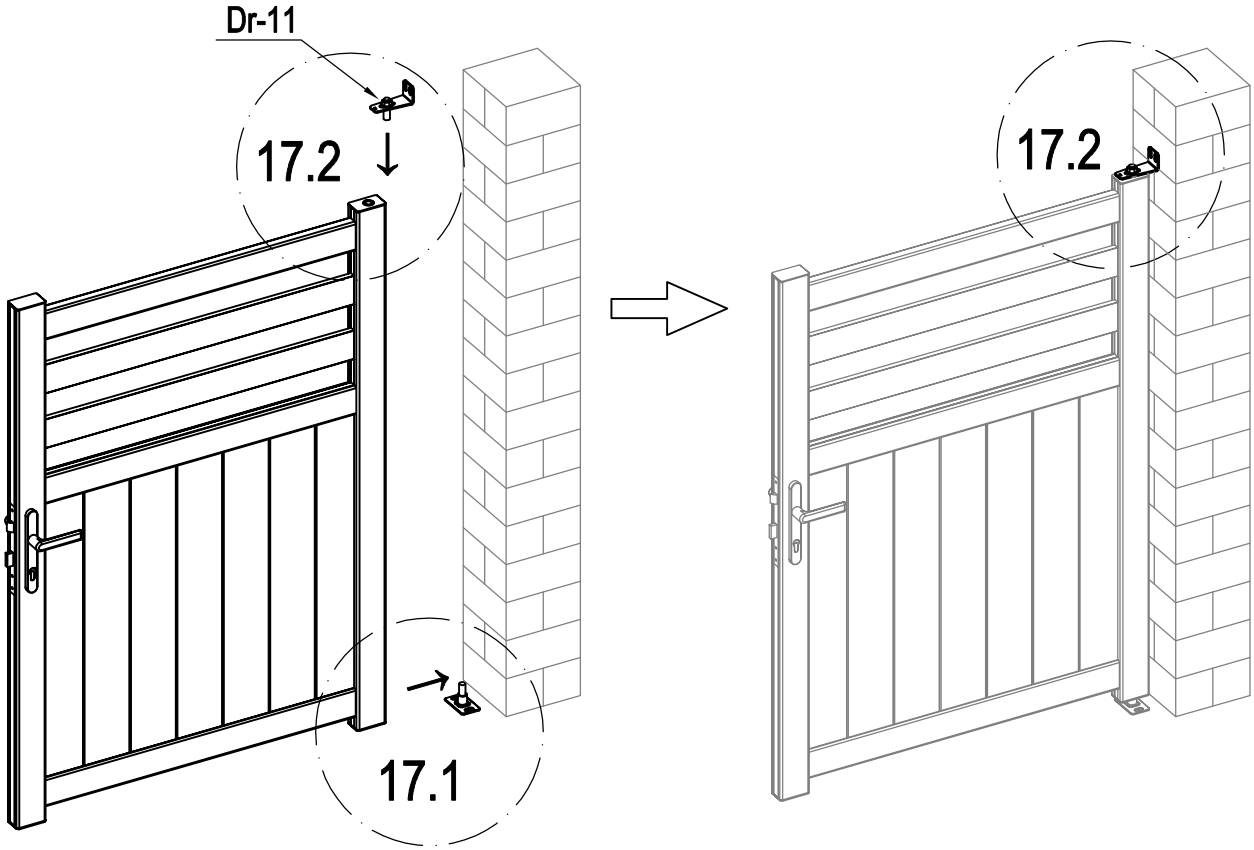

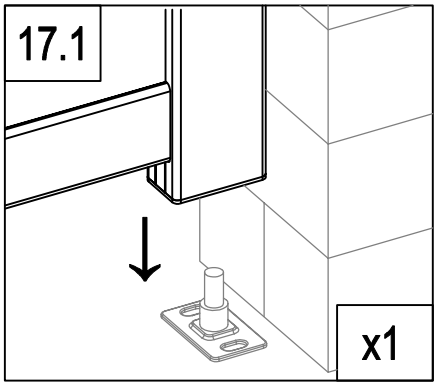

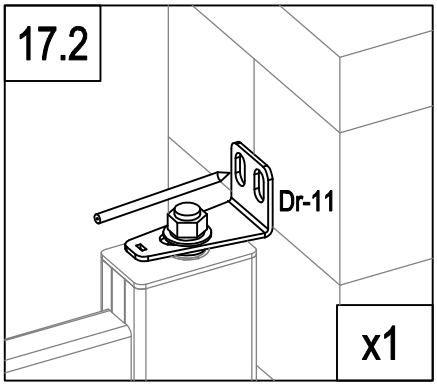

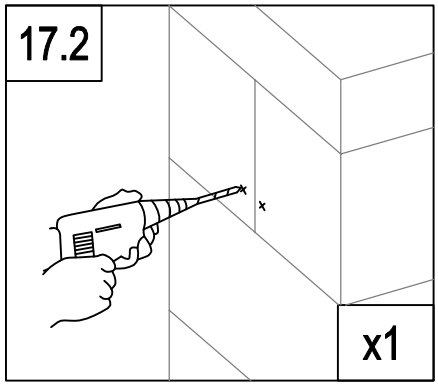

	Dr-11	1
	DM-A33	2

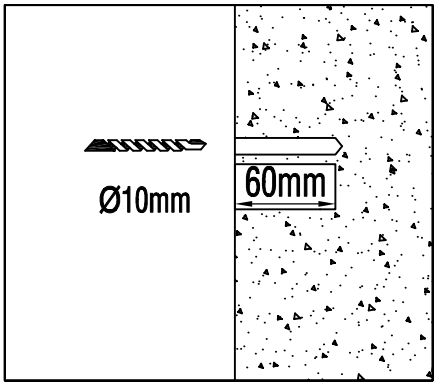

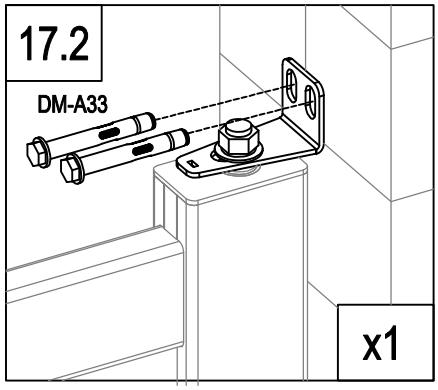

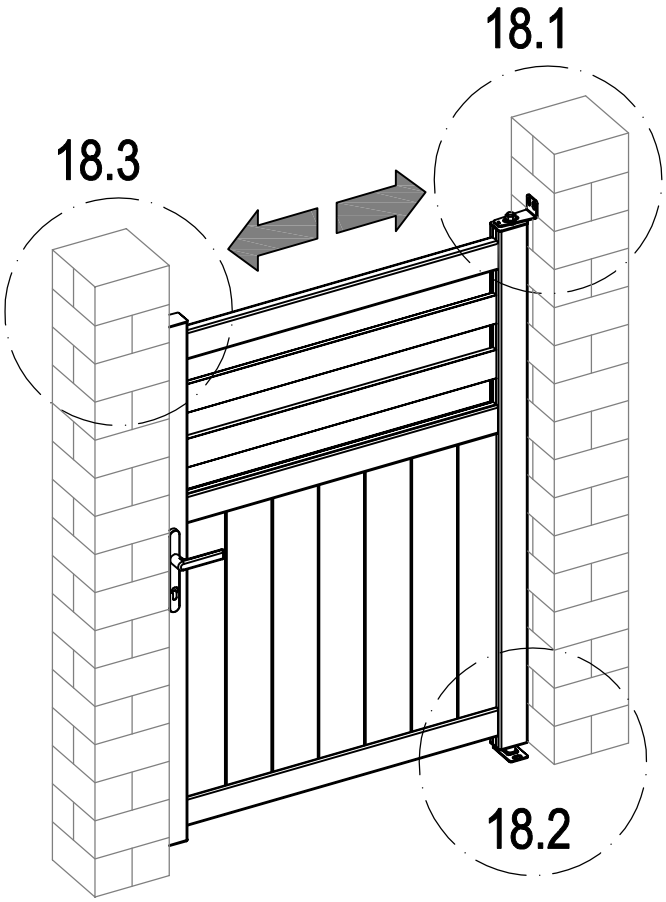
18.1
18.3
18.2

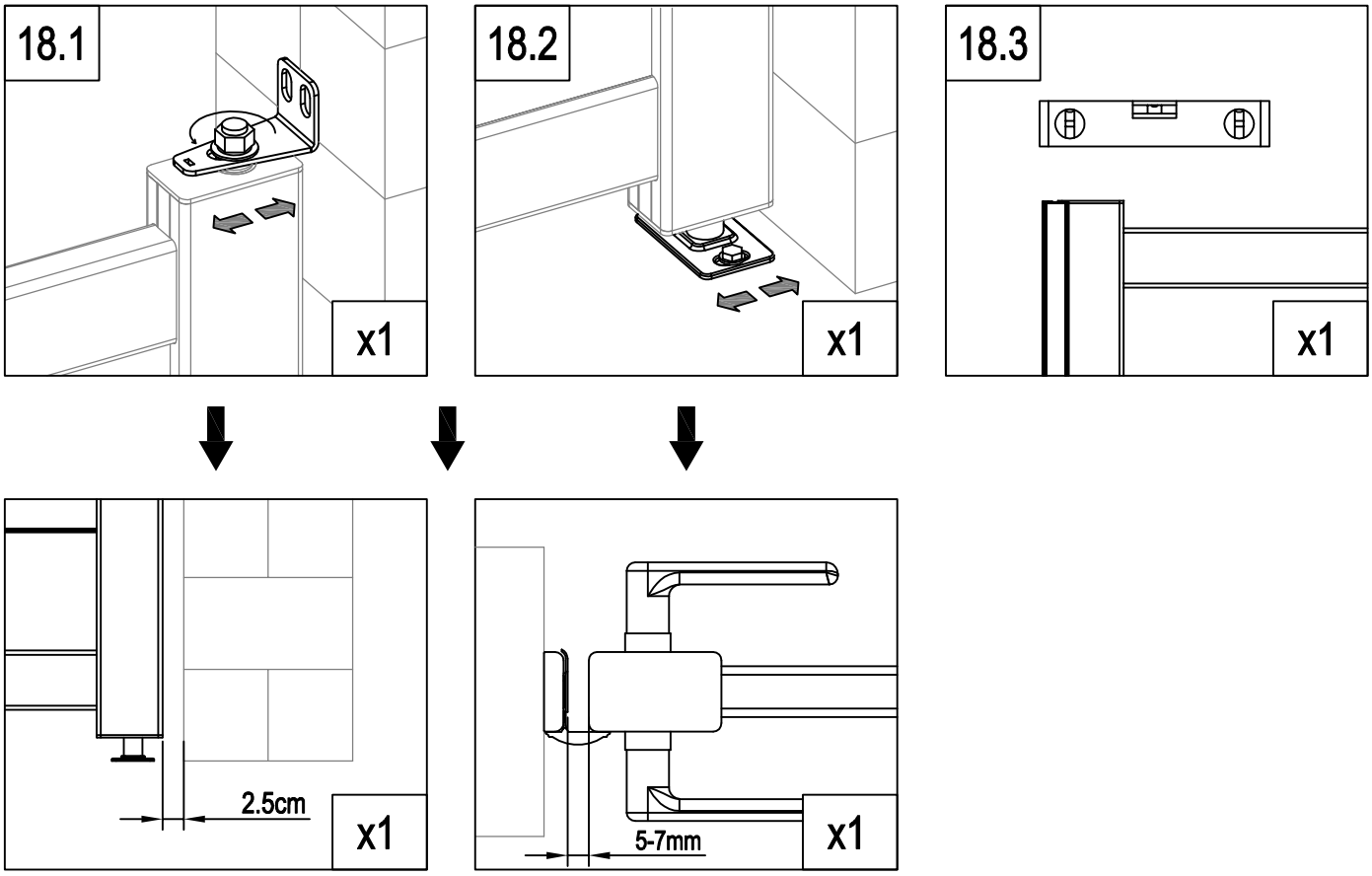
18.1
x1
18.2
x1
18.3
x1
2.5cm
x1
5-7mm
x1

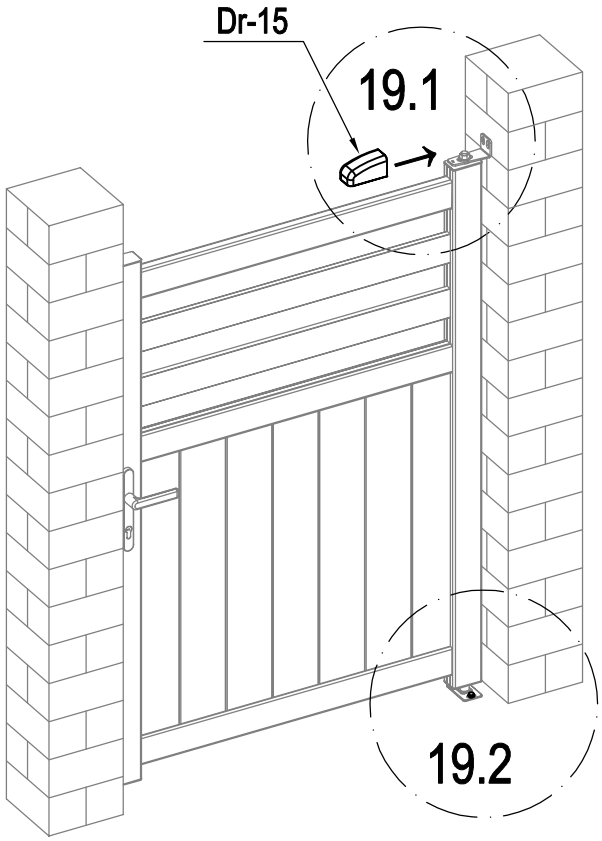

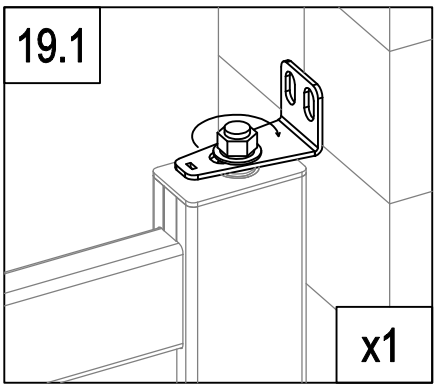

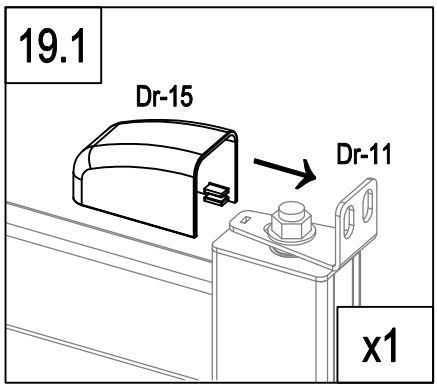

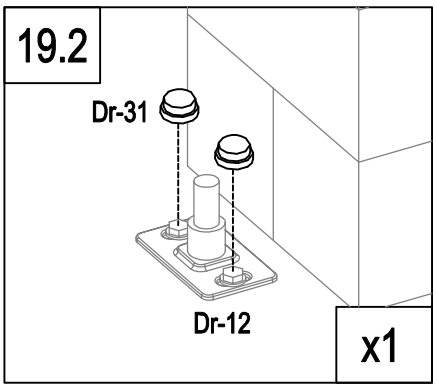

	Dr-15	1
	Dr-31	2

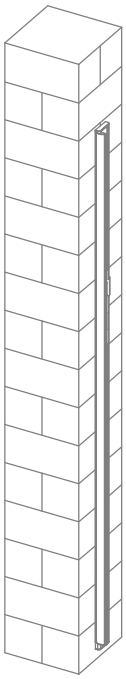

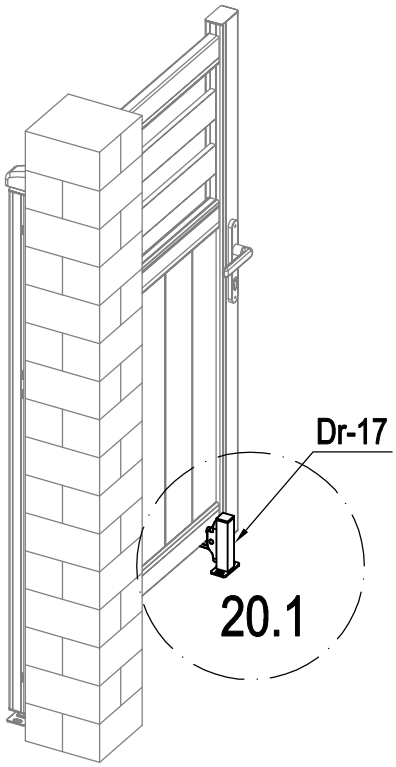

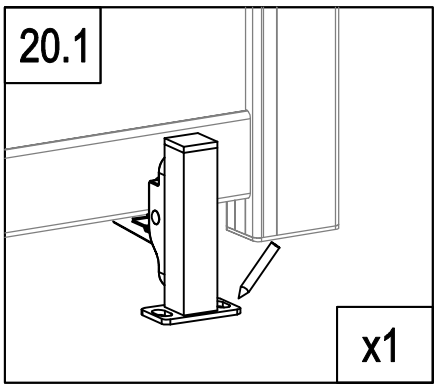

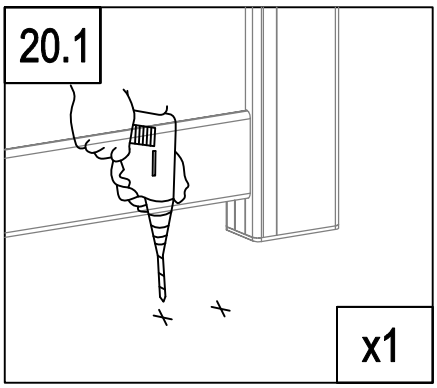

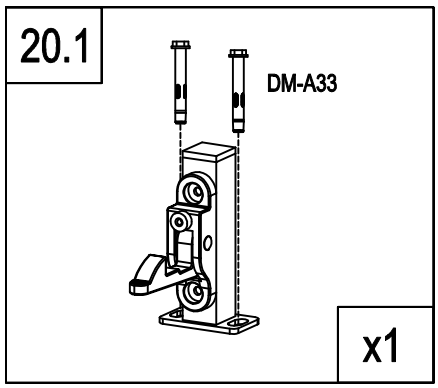

	DM-A33	2
	Dr-17	1