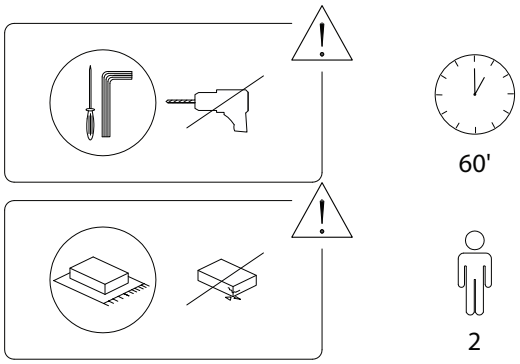

60'

2

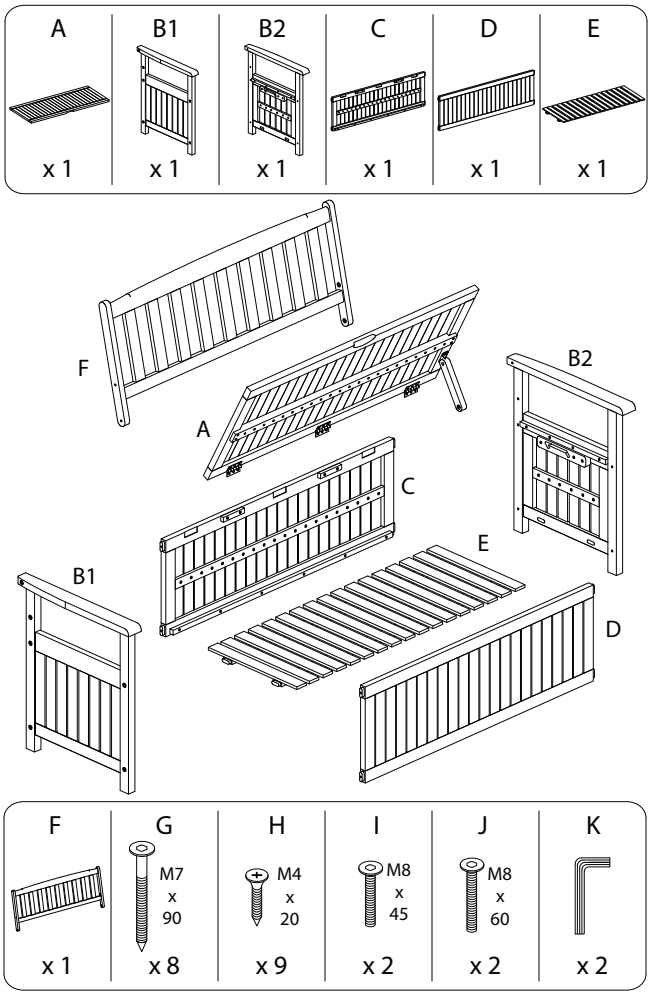
A
x 1
B1
x 1
B2
x 1
C
x 1
D
x 1
E
x 1
F
A
B2
C
E
B1
D
F
x 1
G
M7
x
90
x 8
H
M4
x
20
x 9
I
M8
x
45
x 2
J
M8
x
60
x 2
K
x 2

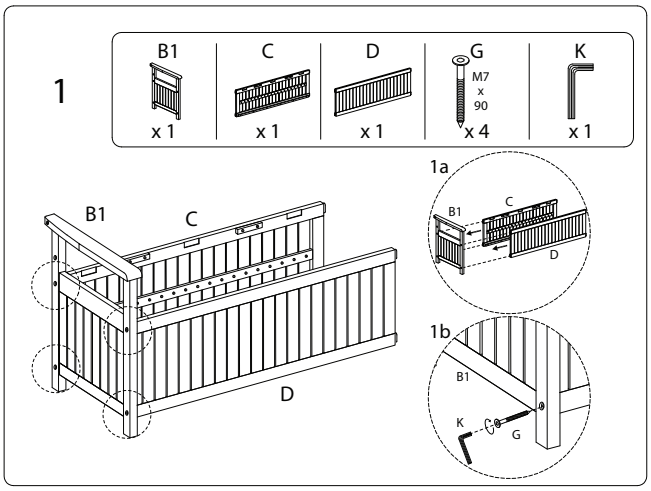
1
B1
x 1
C
x 1
D
x 1
G
M7
x
90
x 4
K
x 1
B1
C
D
1a
B1
C
D
1b
B1
K
G

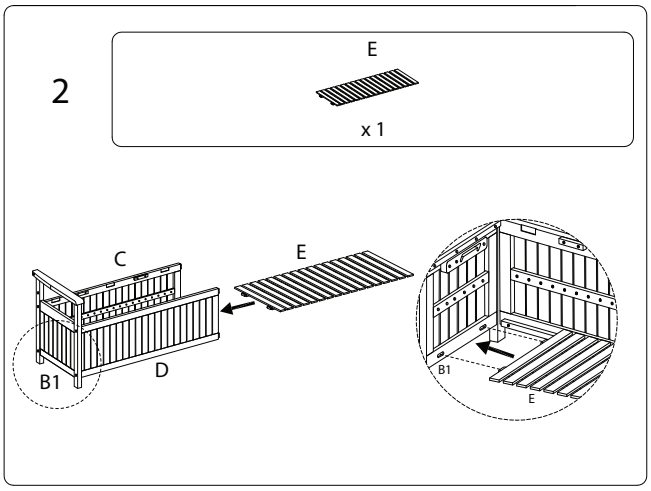
2
E
x 1
C
E
B1
D
B1
E

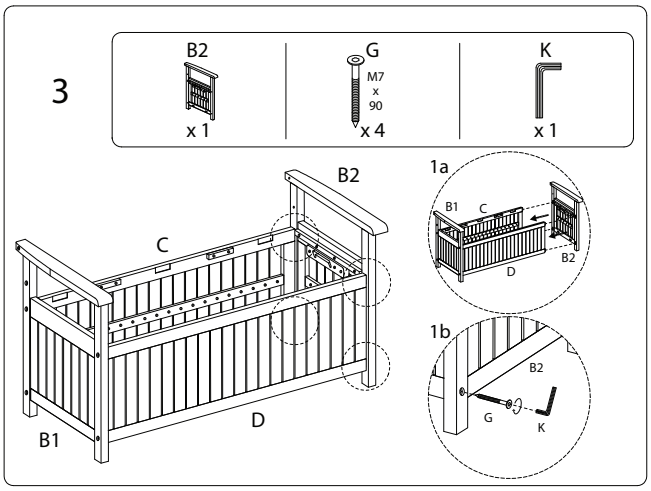
3
B2
x 1
G
M7
x
90
x 4
K
x 1
B2
C
B1
D
1a
B1
C
D
B2
1b
B2
G
K

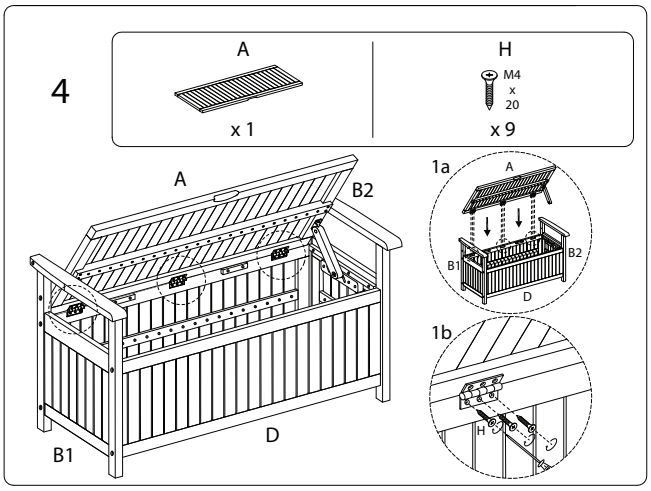
4
A
x 1
H
M4
x
20
x 9
A
B2
B1
D
1a
A
B1
B2
D
1b
H

5

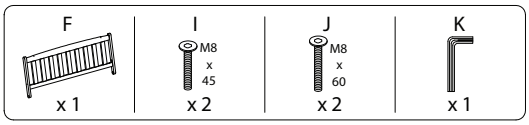

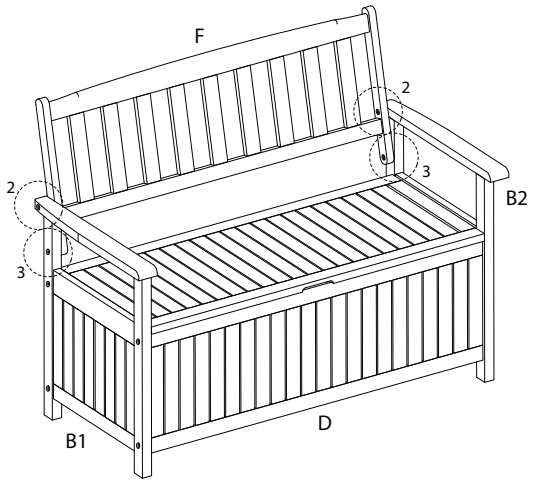

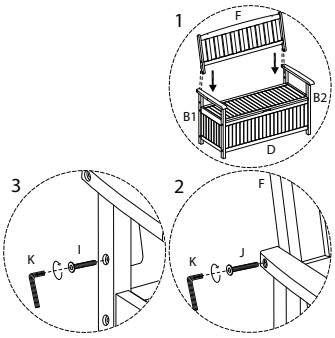
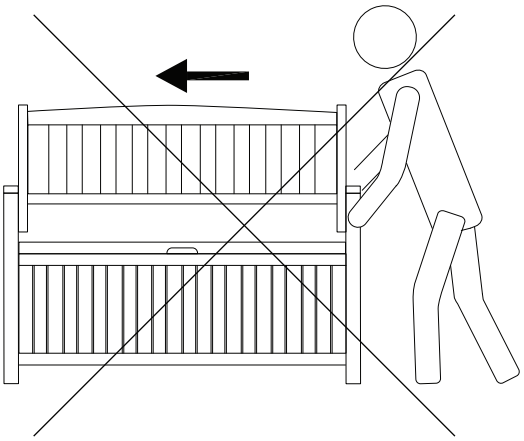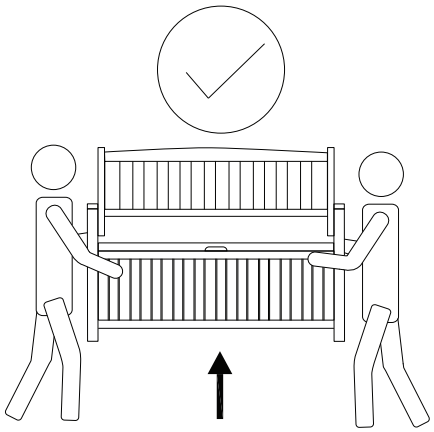
!