CASANOOV

VOGEL 100P160

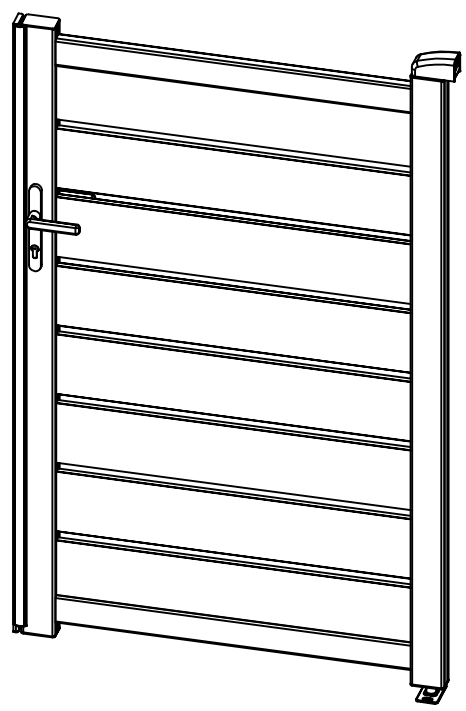

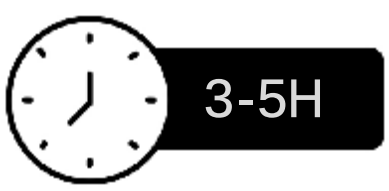

STI-000002 [x1]

FR EN ES DE IT NL PL CE

NOTICE DE MONTAGE / INSTRUCTION MANUAL / MANUAL DE MONTAJE / MONTAGEANLEITUNG / MANUALE DI MONTAGGIO / MONTAGEHANDLEIDING / INSTRUKCJA MONTAŻU

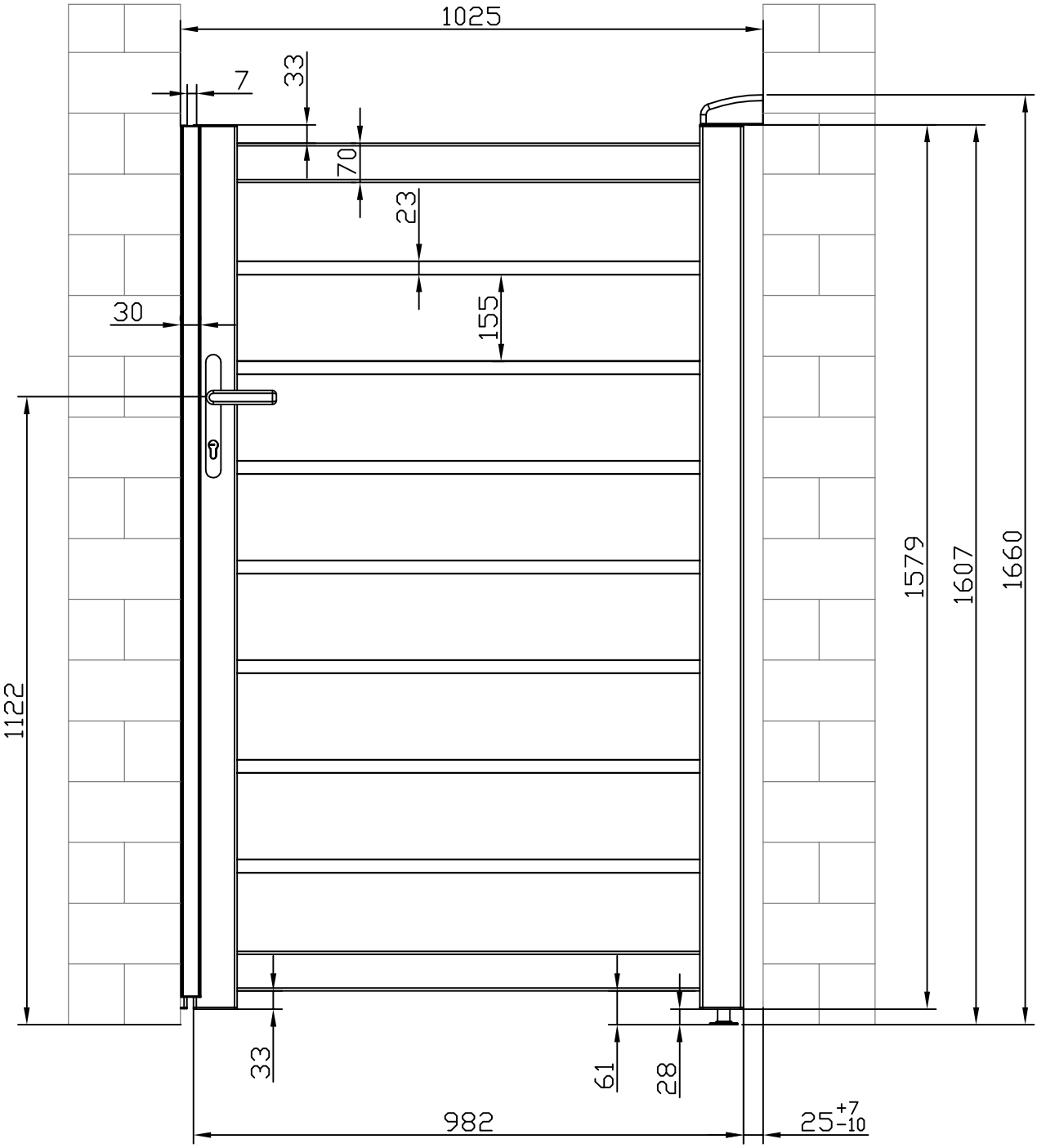
1025
7
33
70
23
155
30
1122
1579
1607
1660
33
61
28
982
25+7-10

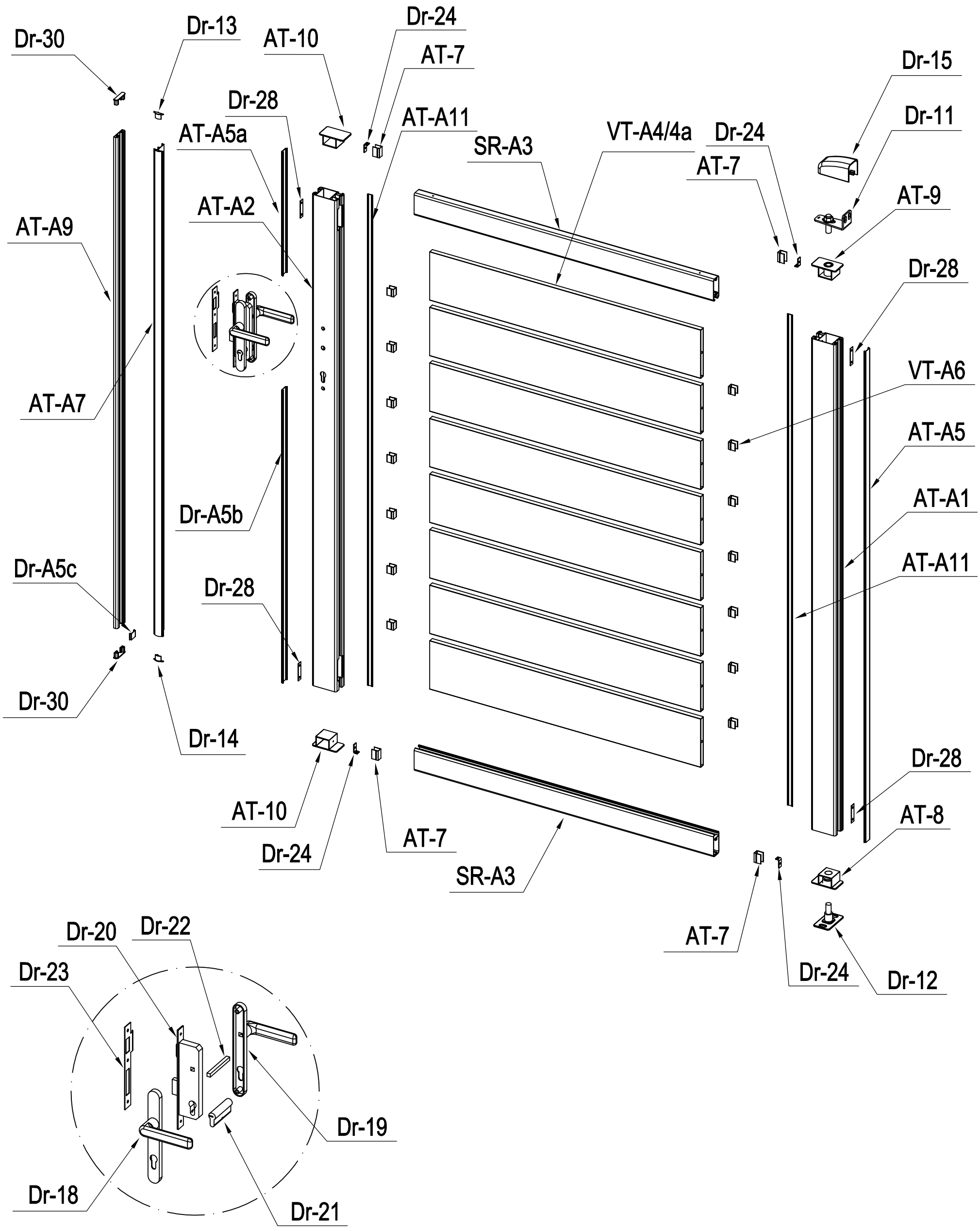
Dr-30
Dr-13
AT-10
Dr-24
AT-7
Dr-15
Dr-28
AT-A11
Dr-11
AT-A5a
SR-A3
VT-A4/4a
Dr-24
AT-7
AT-9
AT-A2
AT-A9
Dr-28
AT-A7
VT-A6
AT-A5
Dr-A5b
AT-A1
Dr-A5c
AT-A11
Dr-28
Dr-30
Dr-14
Dr-28
AT-10
AT-8
Dr-24
AT-7
SR-A3
AT-7
Dr-24
Dr-12
Dr-20
Dr-22
Dr-23
Dr-19
Dr-18
Dr-21

PART LIST

IMAGE	NO.	L.(mm)	QTY
	AT-A1	1573	1
	AT-A2	1573	1
	AT-A9	1573	1
	SR-A3	959	2
	VT-A4	868	7
	VT-A4a (+SR-A15)	868	1
	AT-A5	1573	1
	AT-A5a	395.5	1
	Dr-A5b	937	1
	Dr-A5c	19.5	1
	AT-A11	1573	2
	VT-A6	23	14
	AT-7	29.5	4
	AT-A7	1553	1
	AT-8		1
	AT-9		1
	AT-10		2
	Dr-11		1
	Dr-12		1
	Dr-13		1
	Dr-14		1

IMAGE	NO.	L.(mm)	QTY
	Dr-15		1
	Dr-17		1
	Dr-30		2
	Dr-31		2
	Dr-18		1
	Dr-19		1
	Dr-20		1
	Dr-21		1
	Dr-22		1
	Dr-23		1
	Dr-24		4
	Dr-25		1
	Dr-25a		2
	Dr-26		3
	Dr-27		2
	VT-B30		4
	VT-B31		4
	VT-B32		6
	VT-B33		8
	VT-B34		3
	VT-B35		32
	Dr-28		4

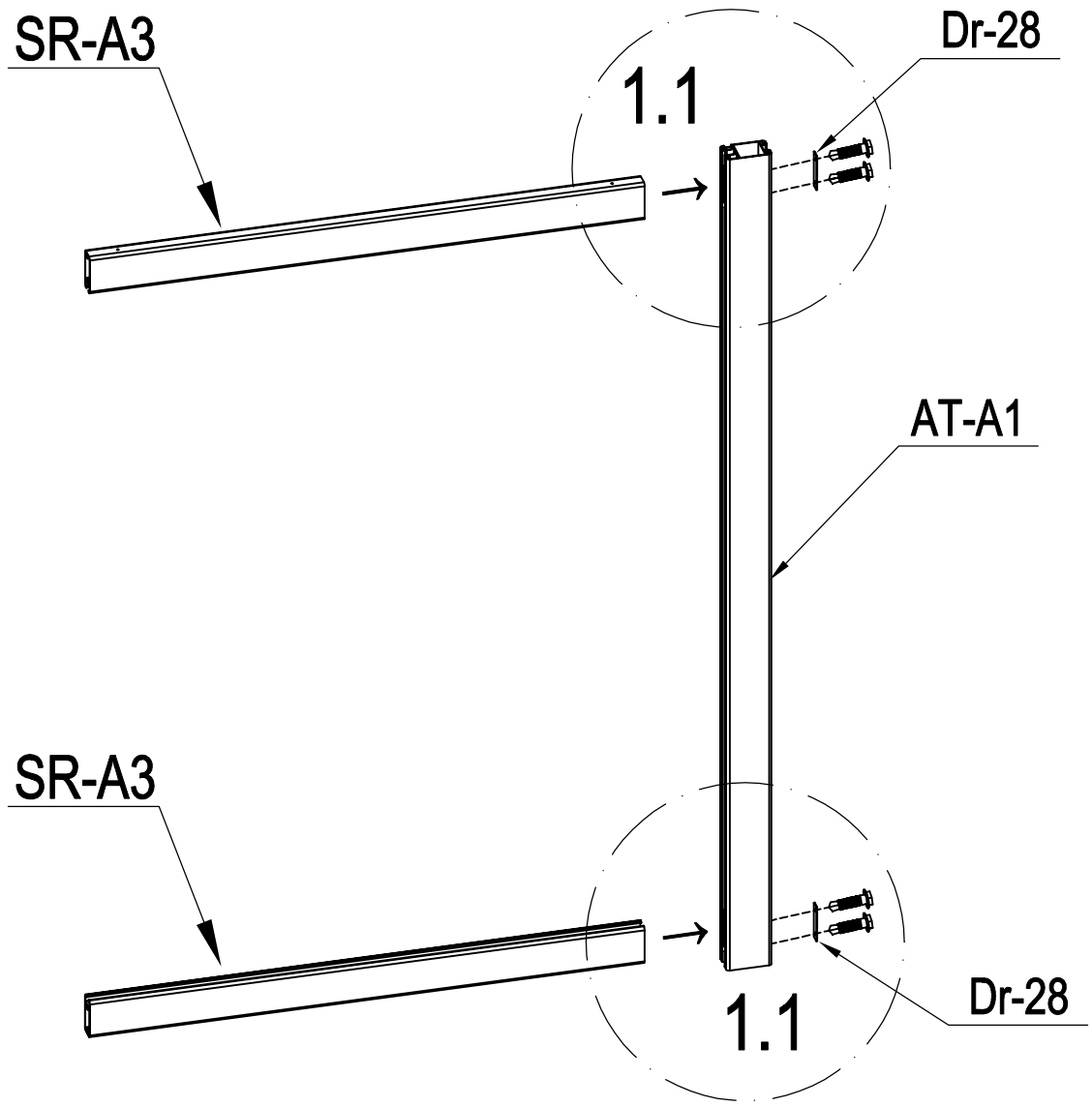

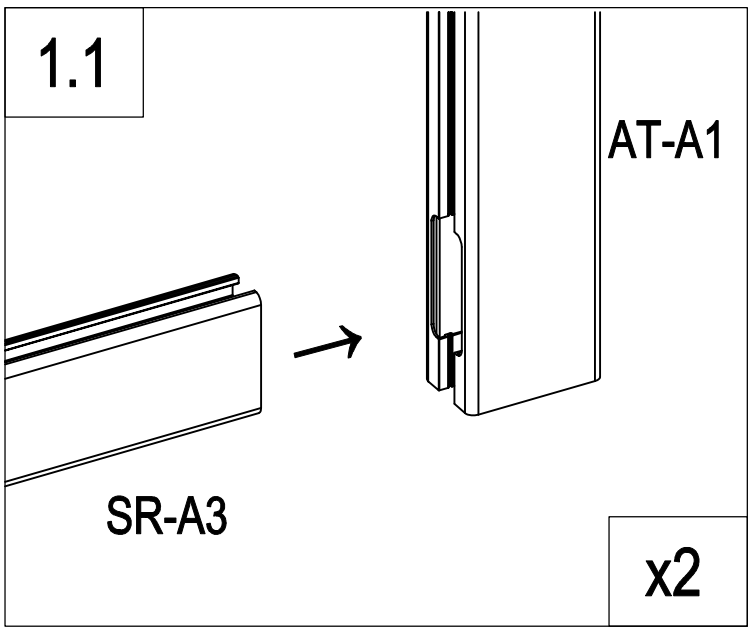

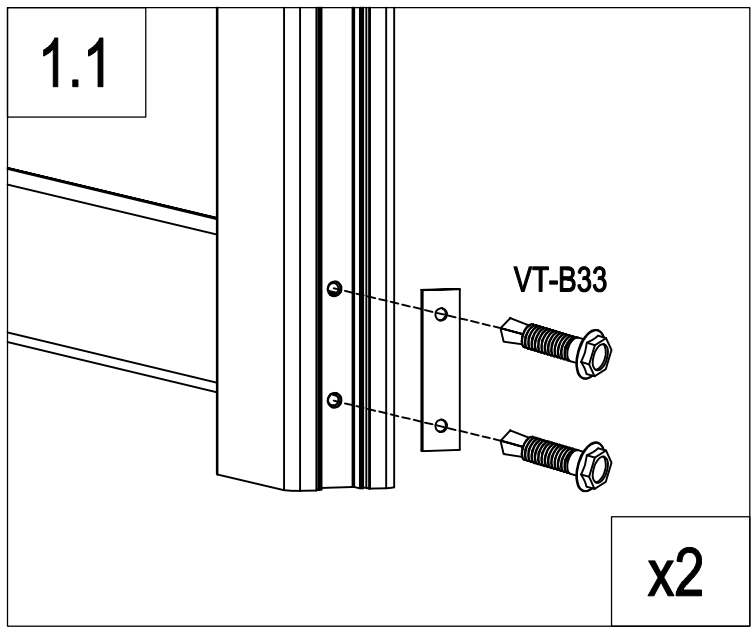

	AT-A1	1
	SR-A3	2
	Dr-28	2
	VT-B33	4

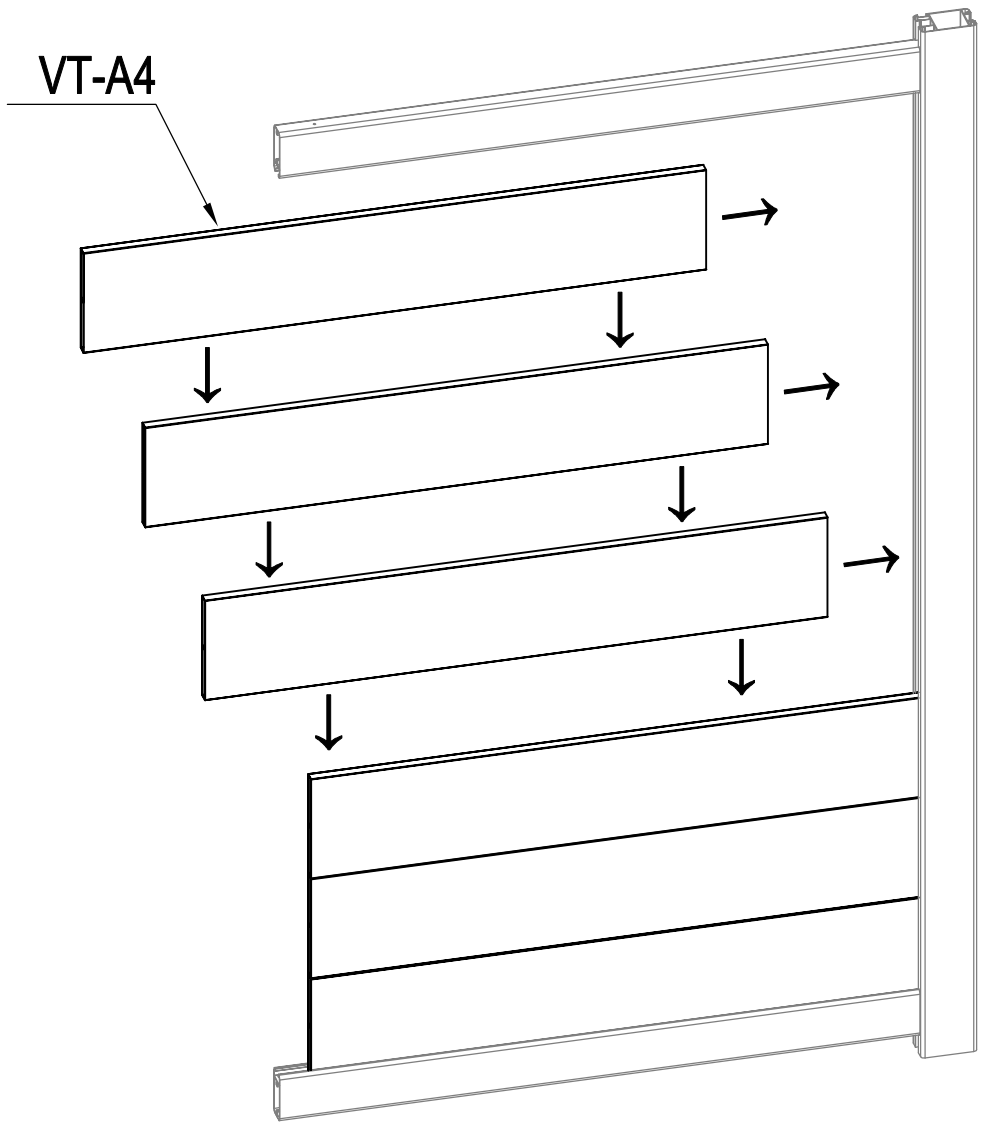

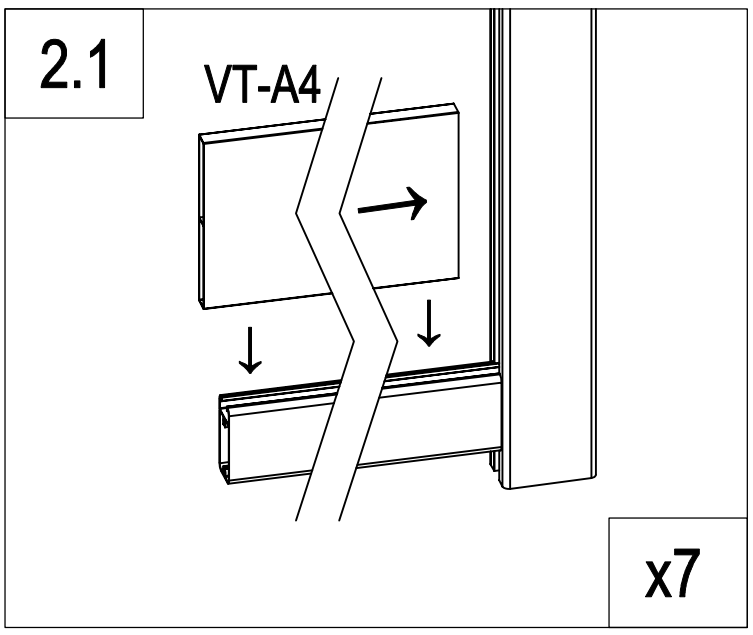

	VT-A4	7

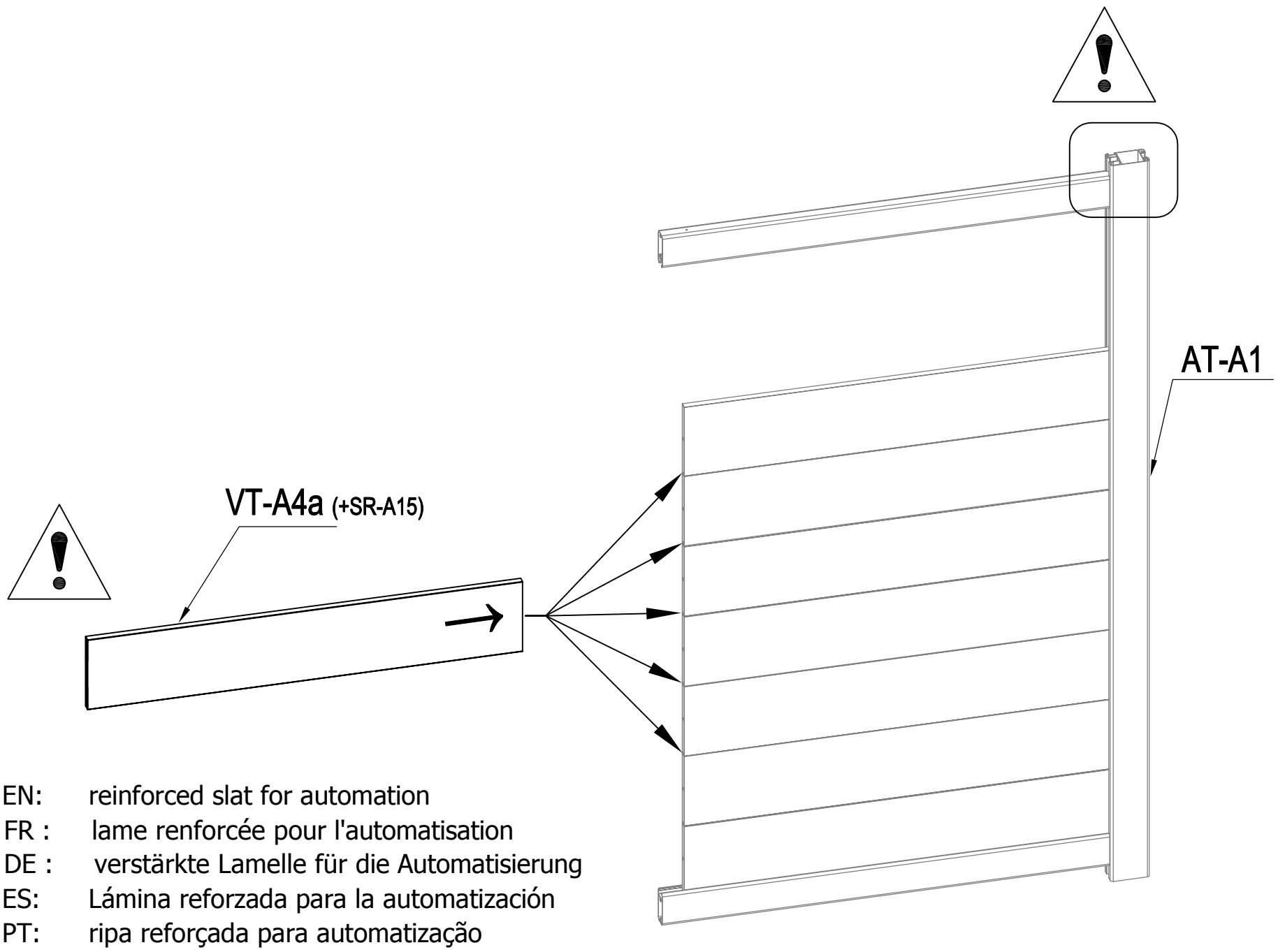

EN: reinforced slat for automation
FR : lame renforcée pour l'automatisation
DE : verstärkte Lamelle für die Automatisierung
ES: Lámina reforzada para la automatización
PT: ripa reforçada para automatização
IT: lamella rinforzata per l'automazione
NL: versterkte lat voor automatisering
PL: wzmocniona listwa do automatyzacji

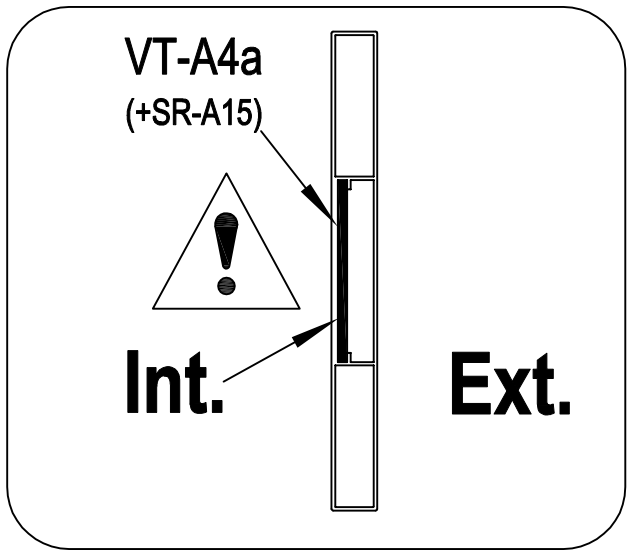

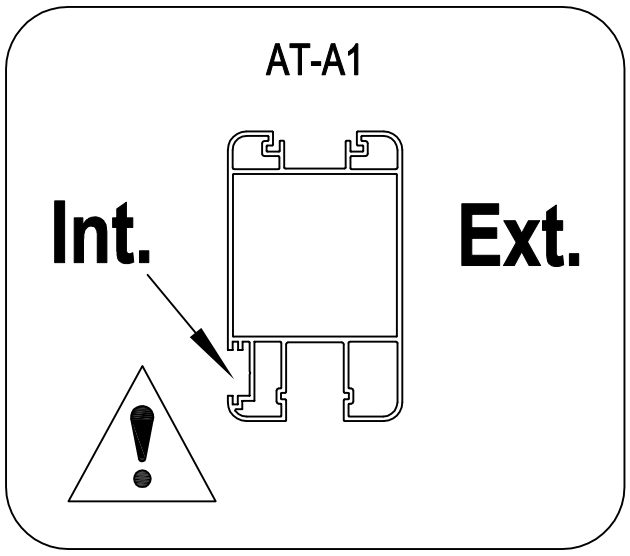

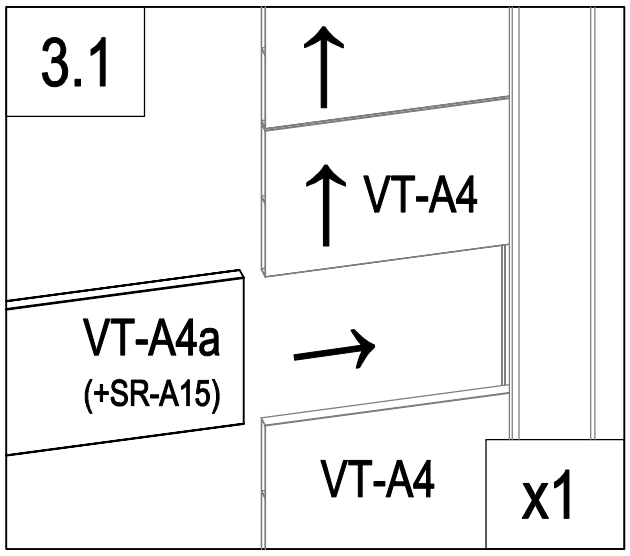

	VT-A4a (+SR-A15)	1

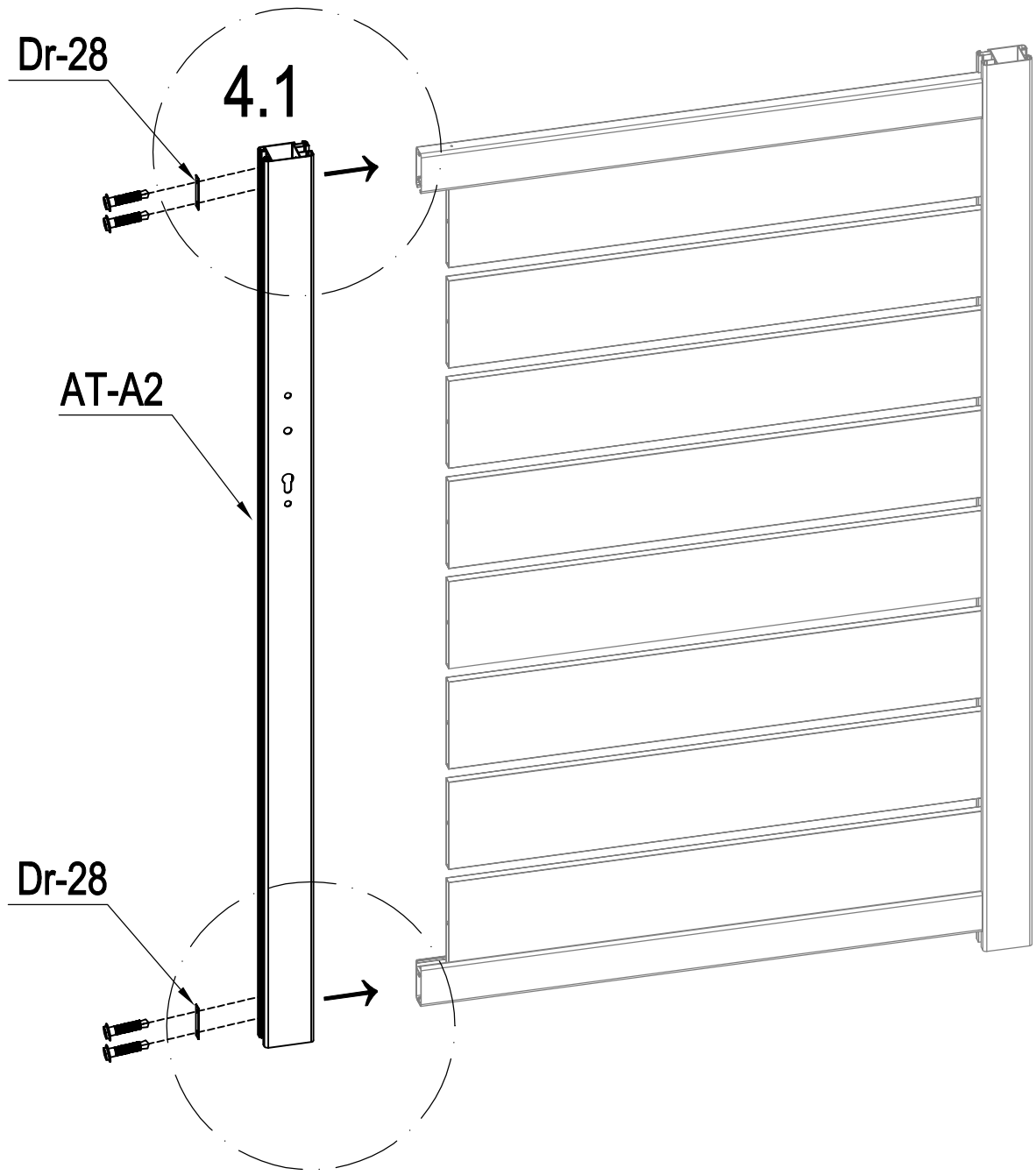

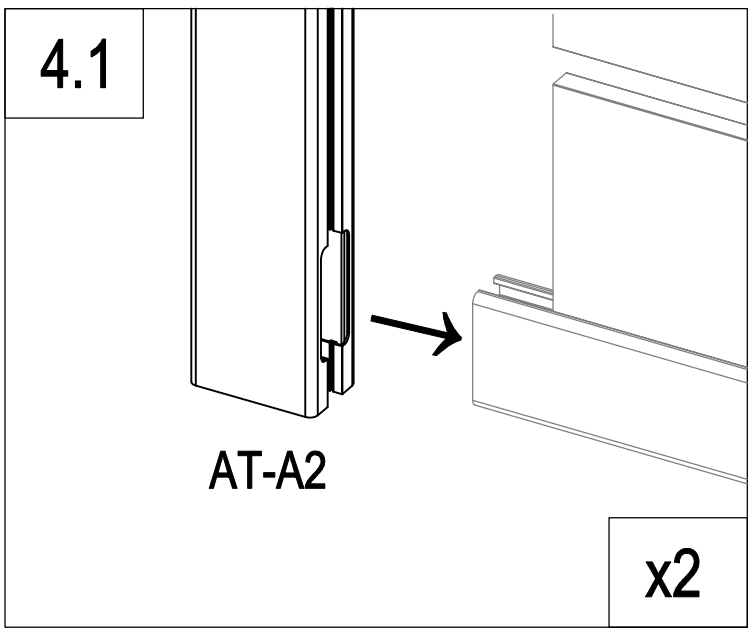

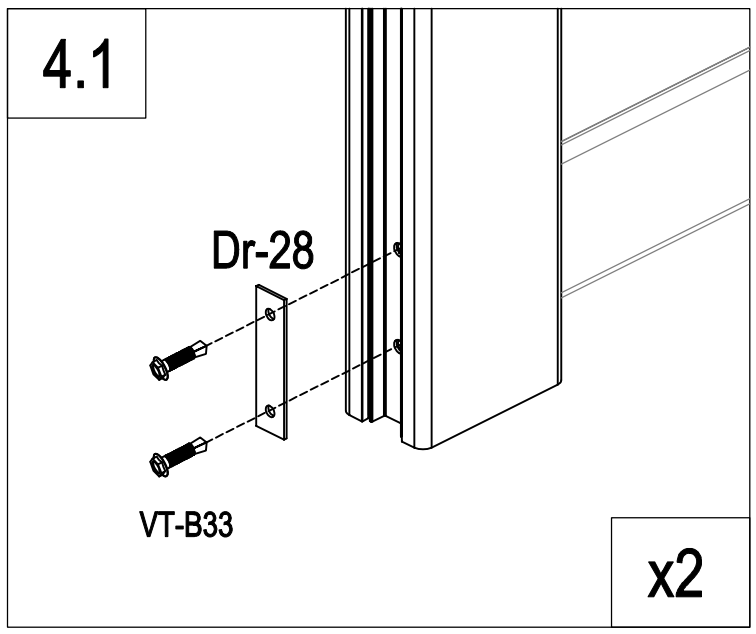

	AT-A2	1
	Dr-28	2
	VT-B33	4

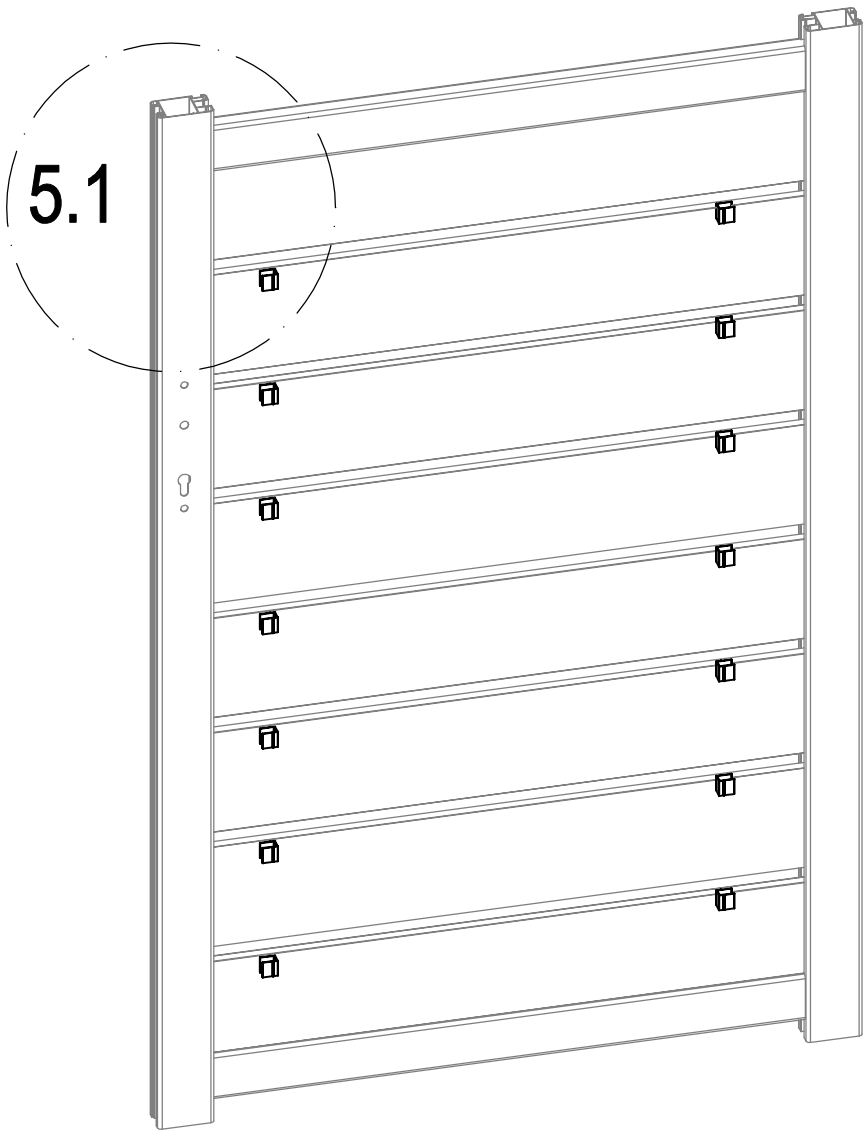

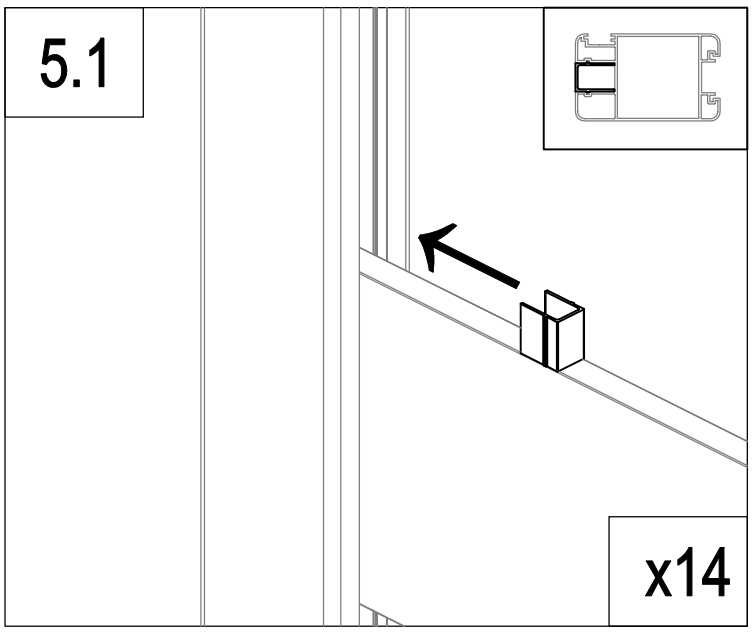

	VT-A6	14

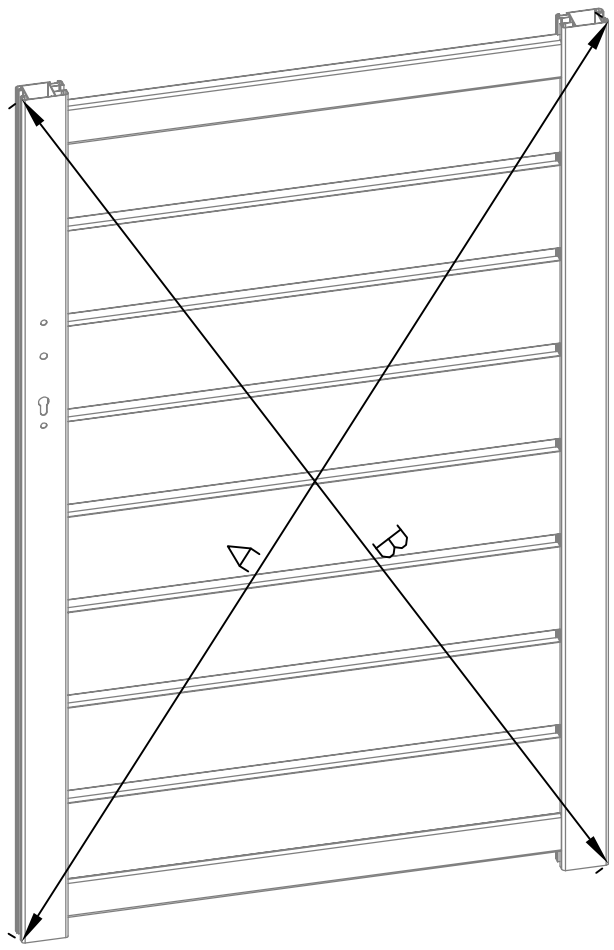

A=B

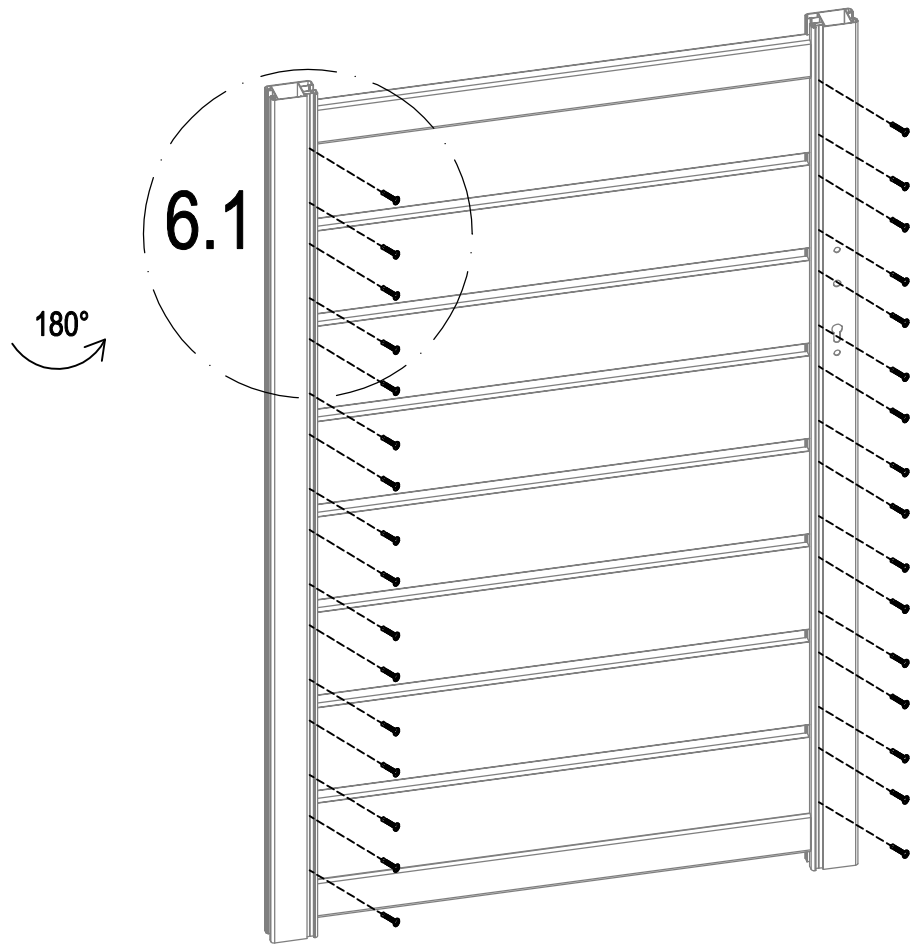

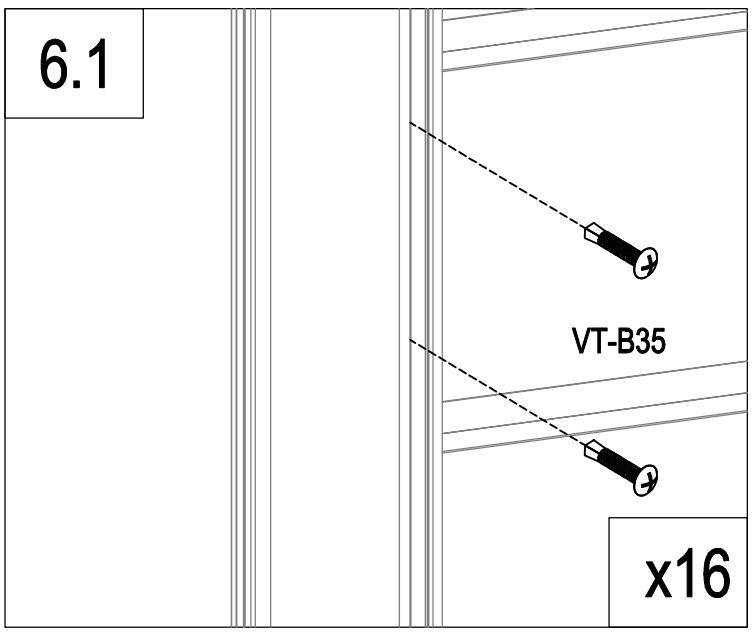

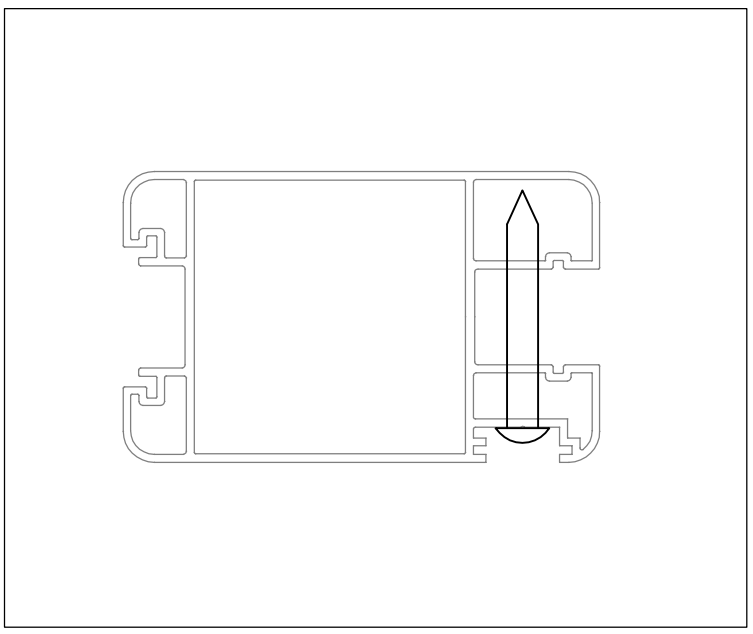

	VT-B35	32

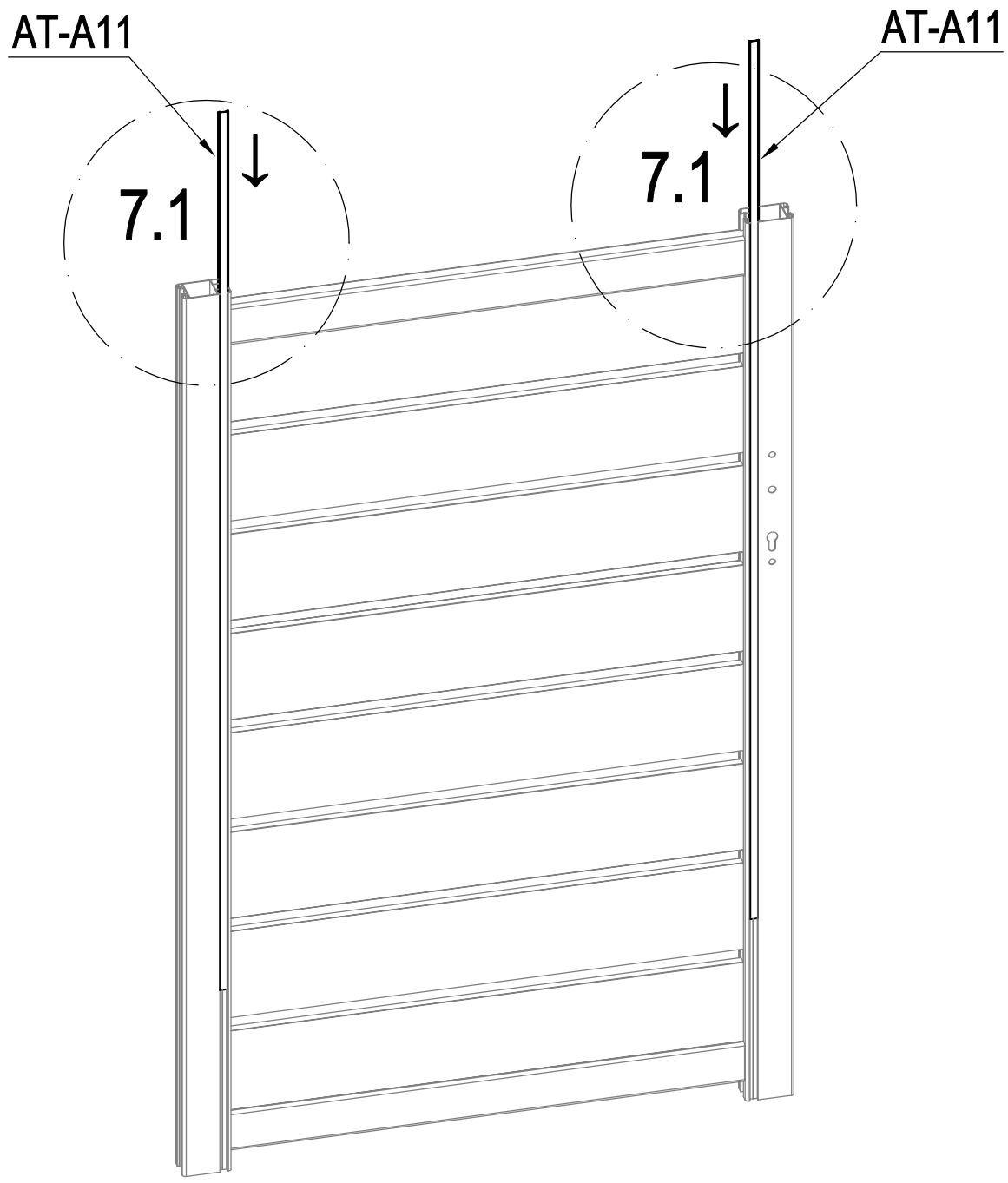

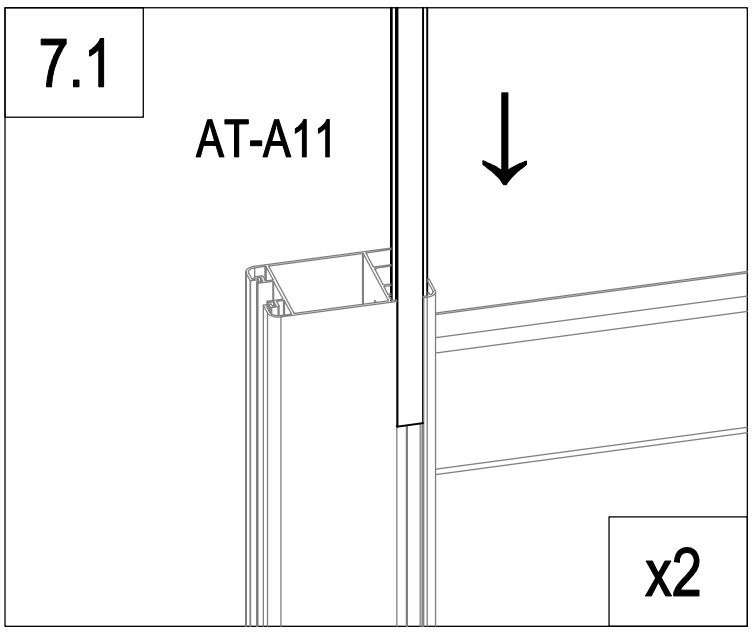

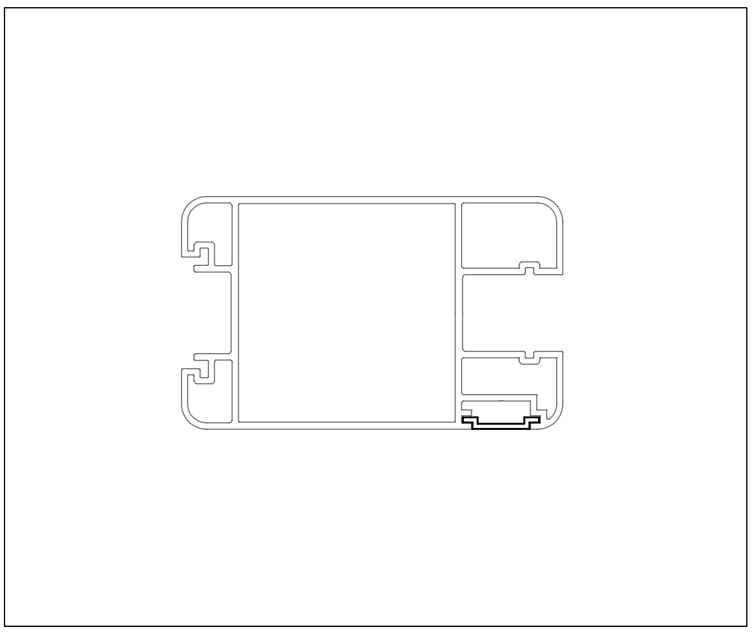

	AT-A11	2

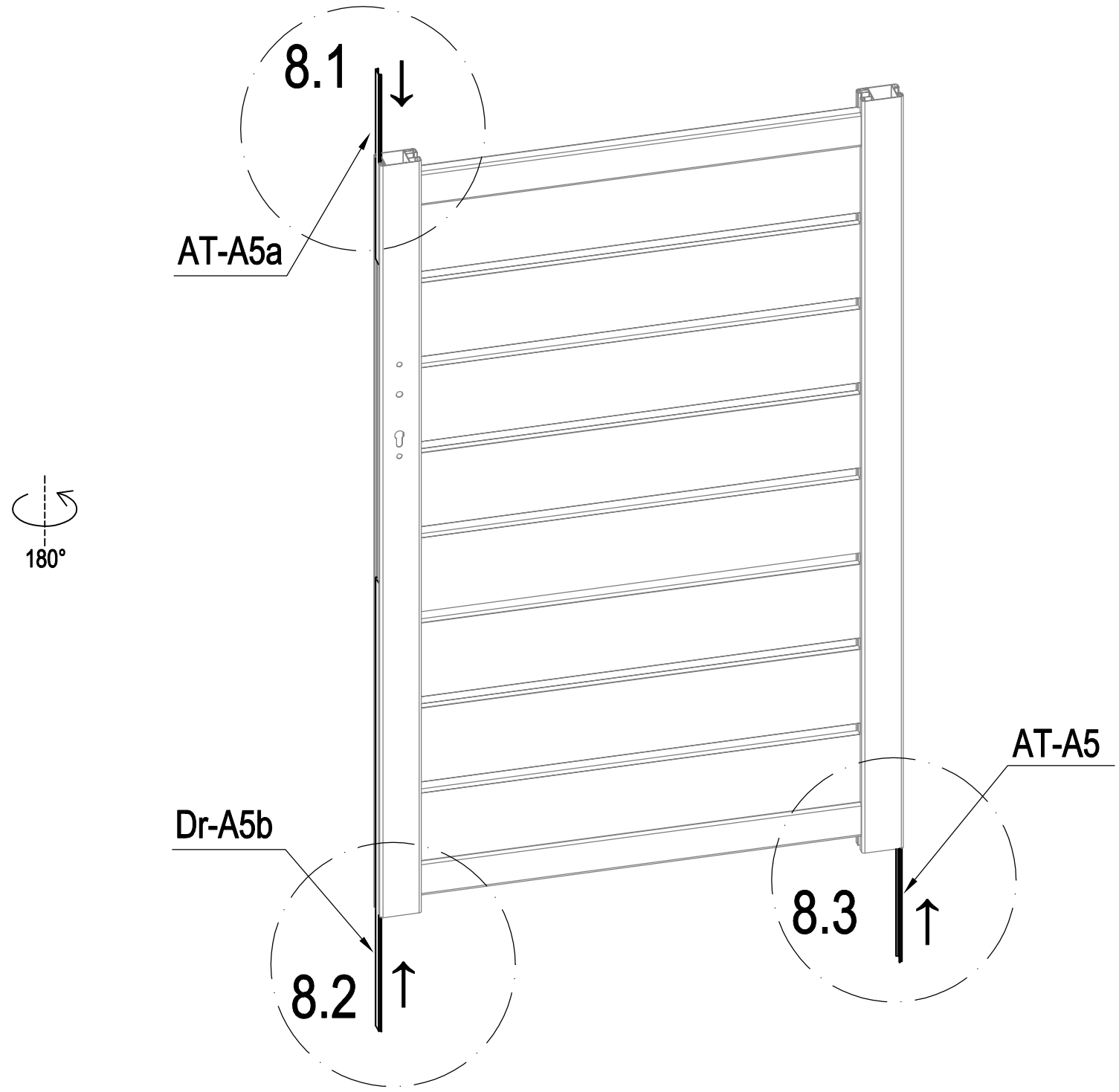

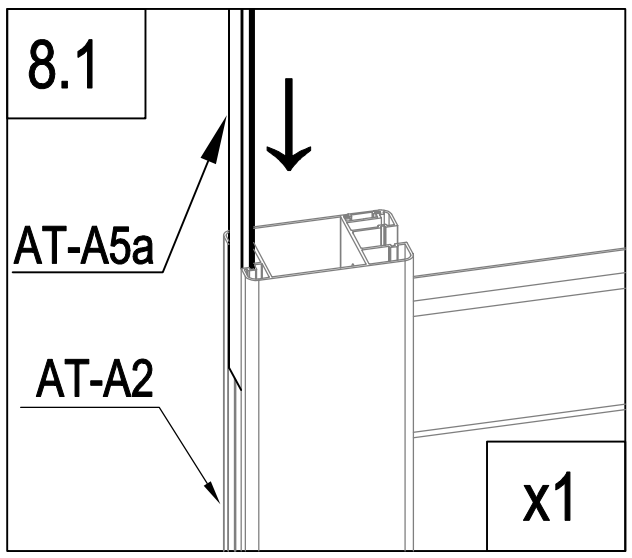

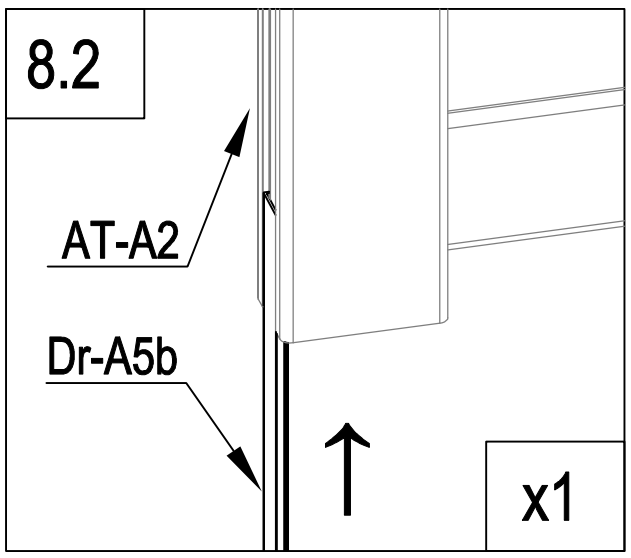

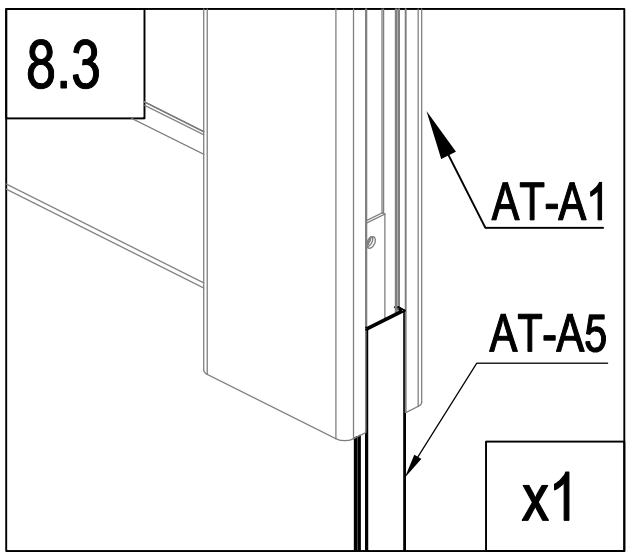

	AT-A5a	1
	Dr-A5b	1
	AT-A5	1

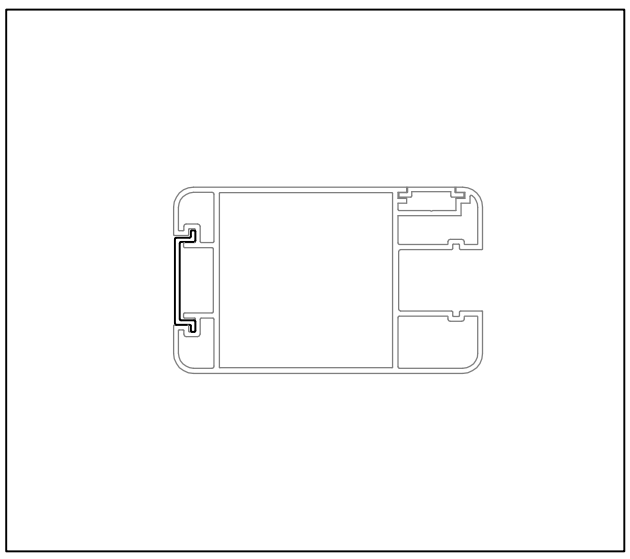

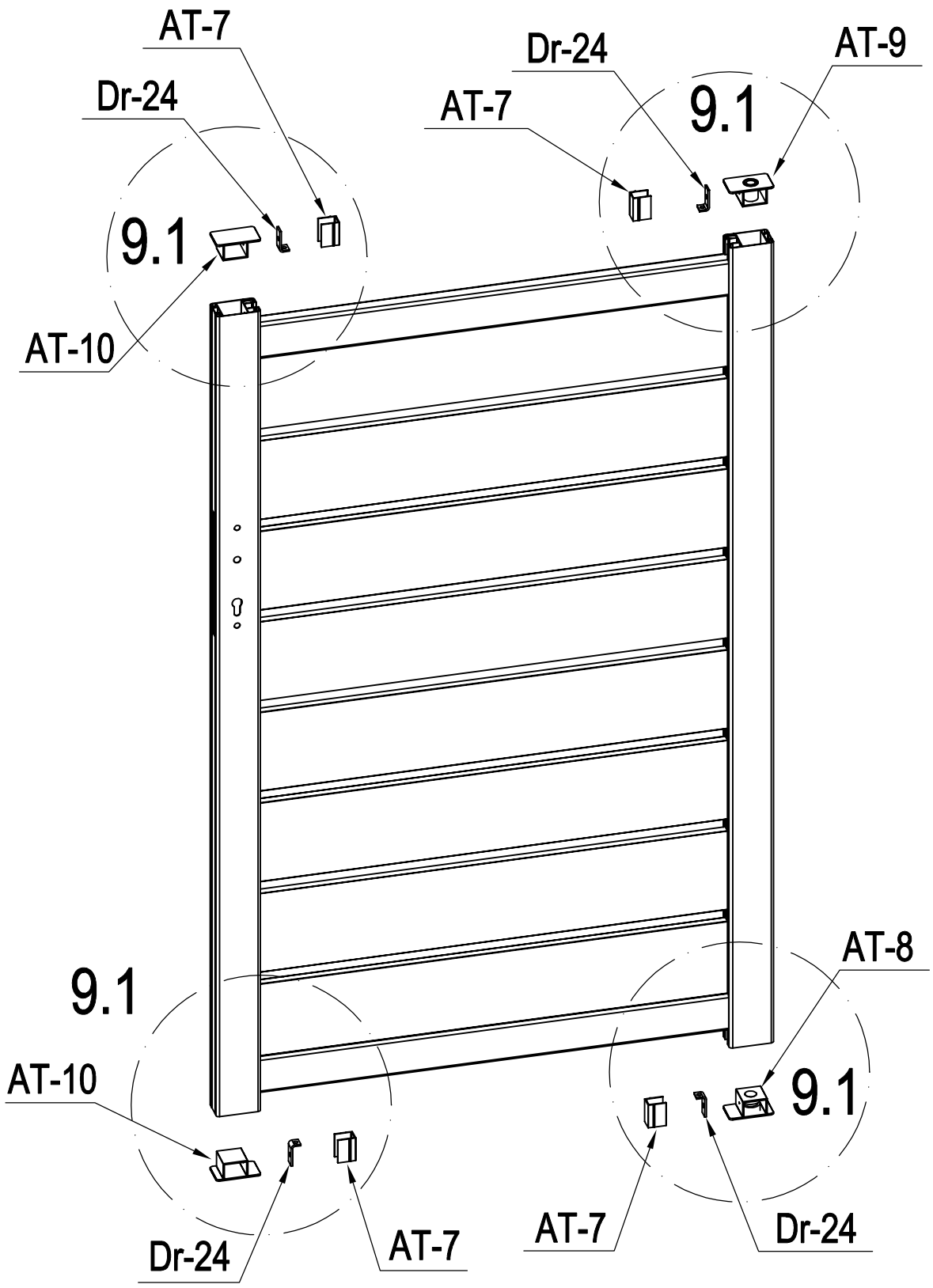

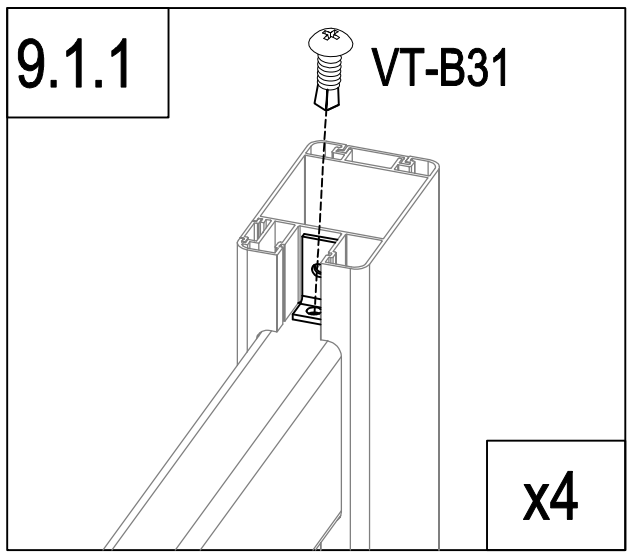

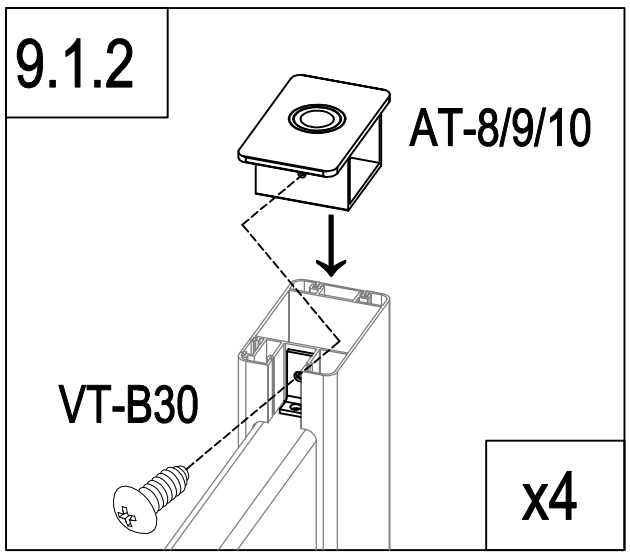

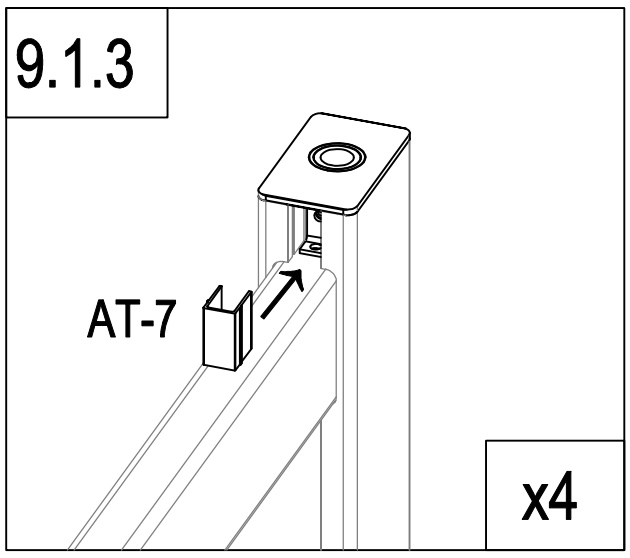

	AT-8	1
	AT-9	1
	AT-10	2
	AT-7	4

	Dr-24	4
	VT-B30	4
	VT-B31	4

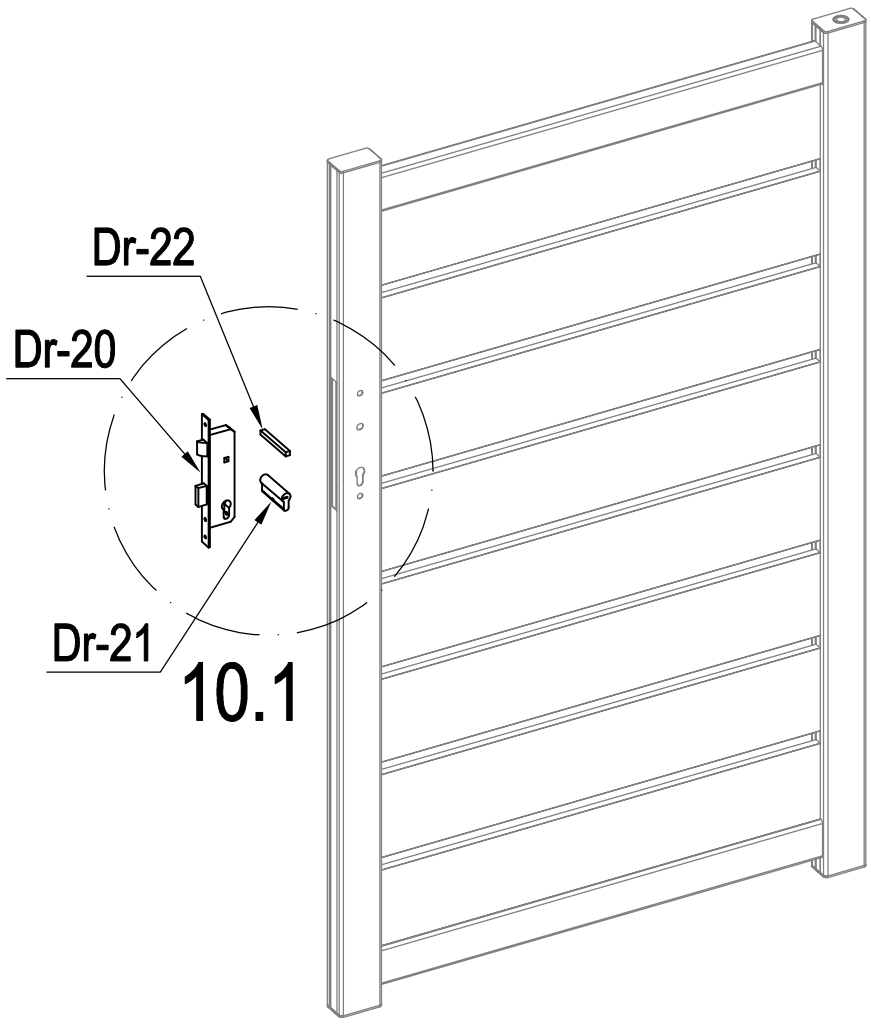

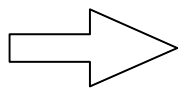

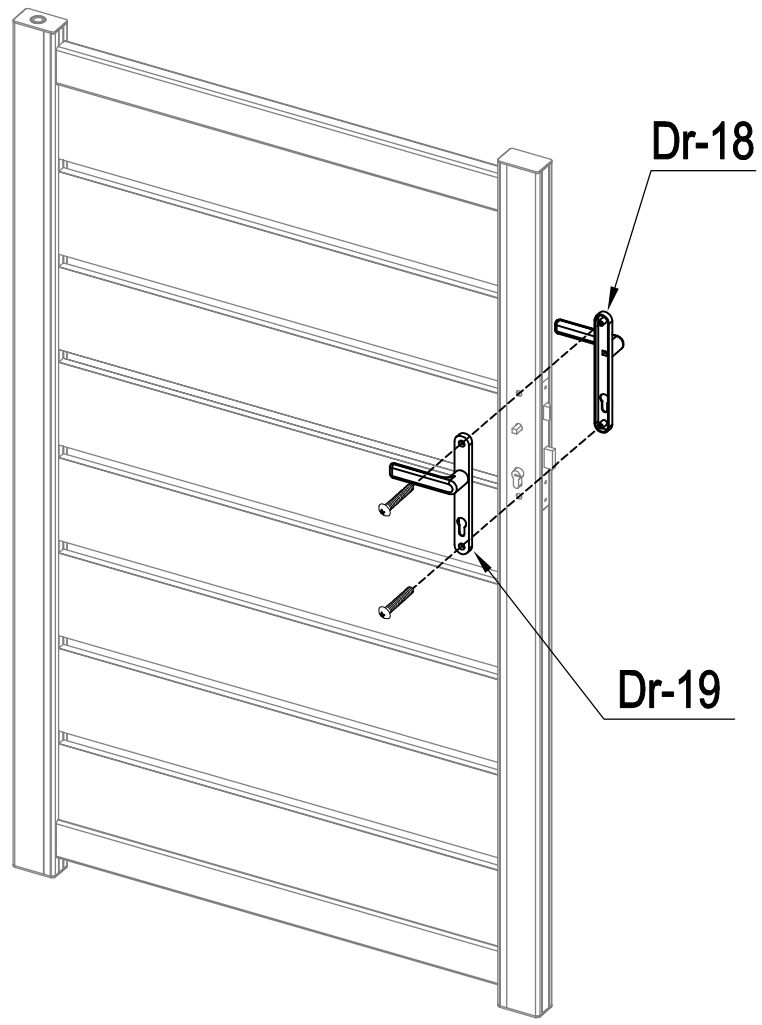

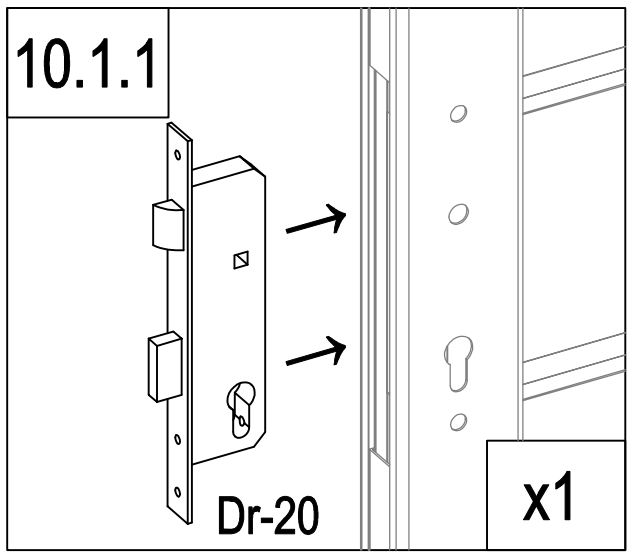

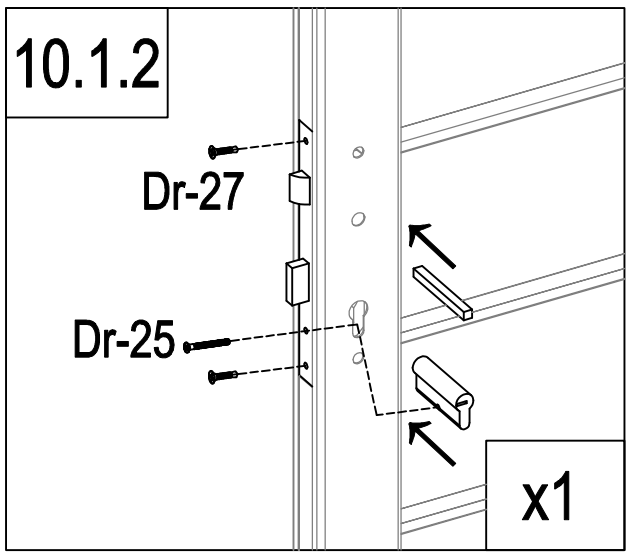

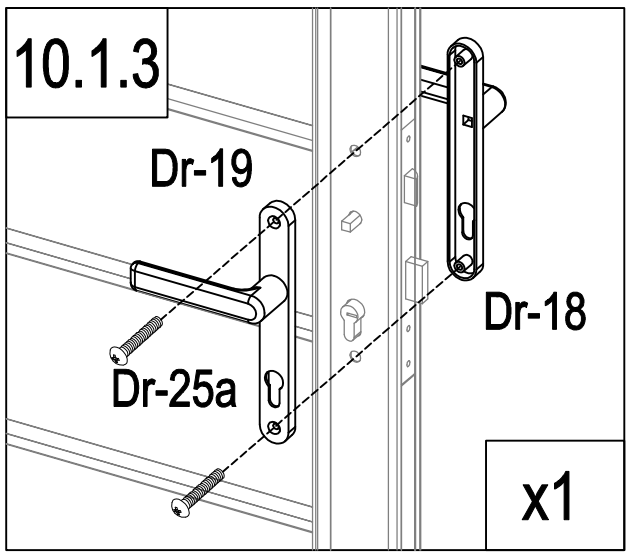

	Dr-20	1
	Dr-21	1
	Dr-22	1
	Dr-25	1

	Dr-18	1
	Dr-19	1
	Dr-25a	2
	Dr-27	2

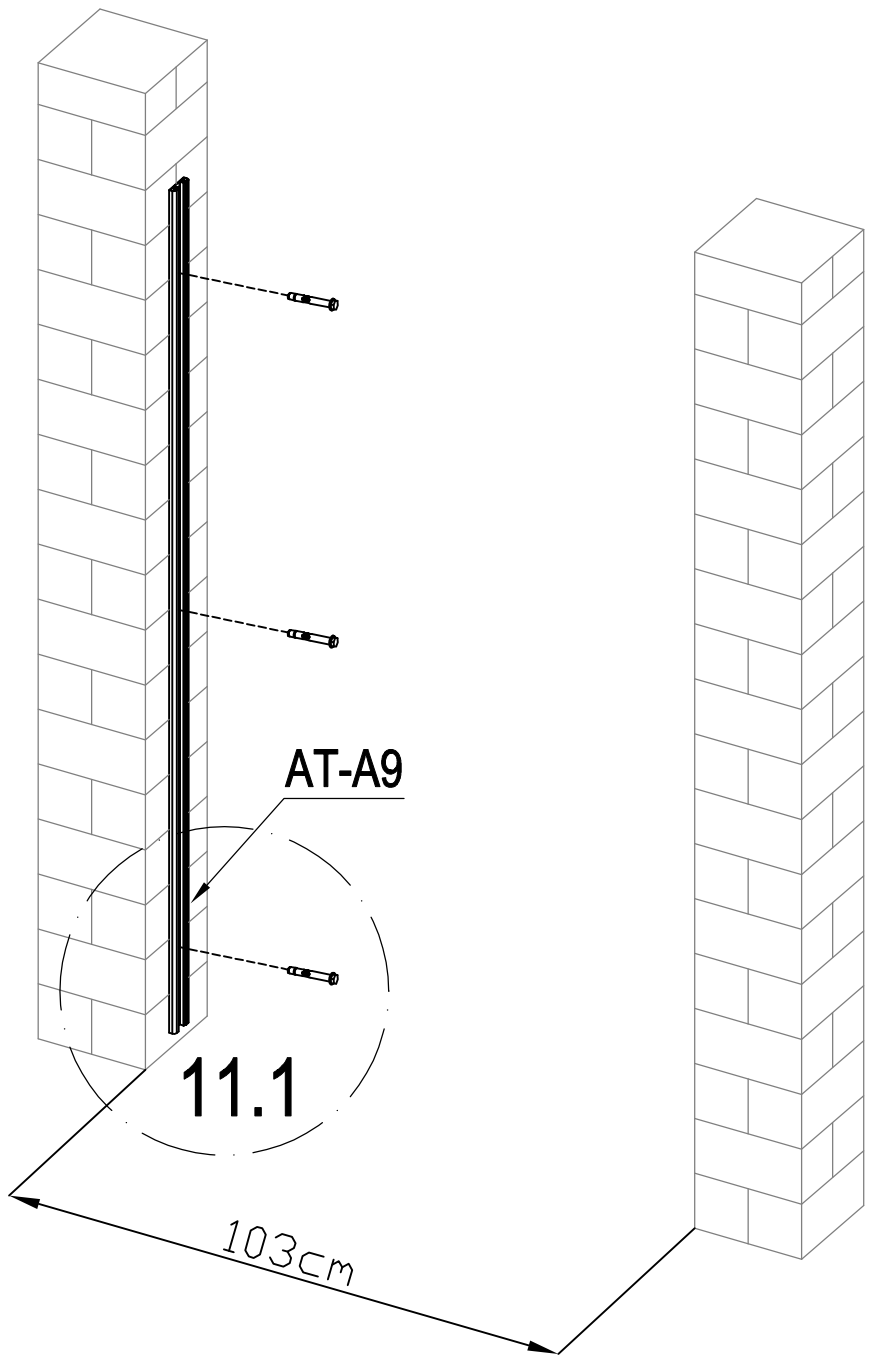

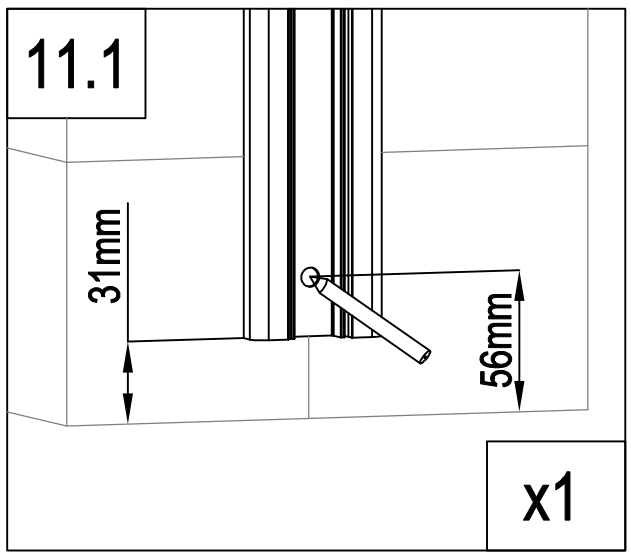

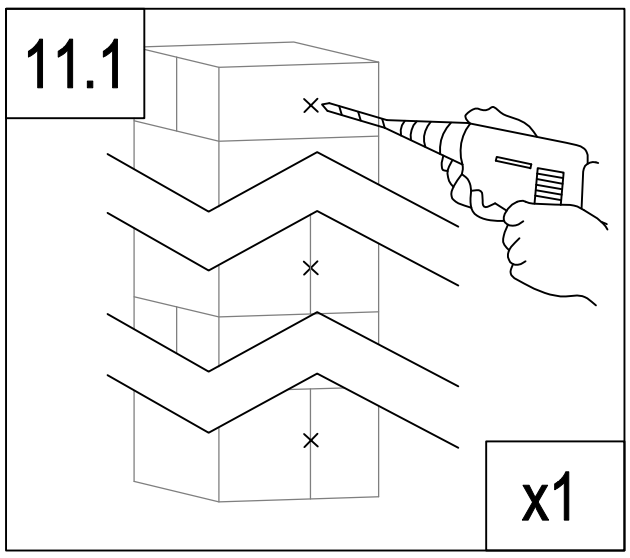

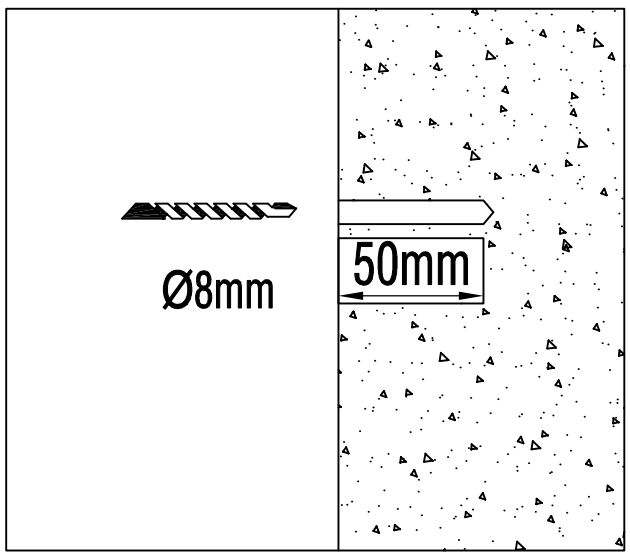

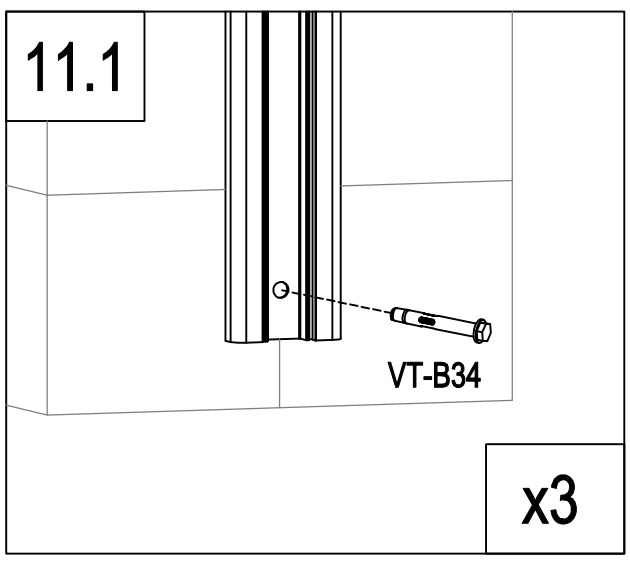

	AT-A9	1
	VT-B34	3

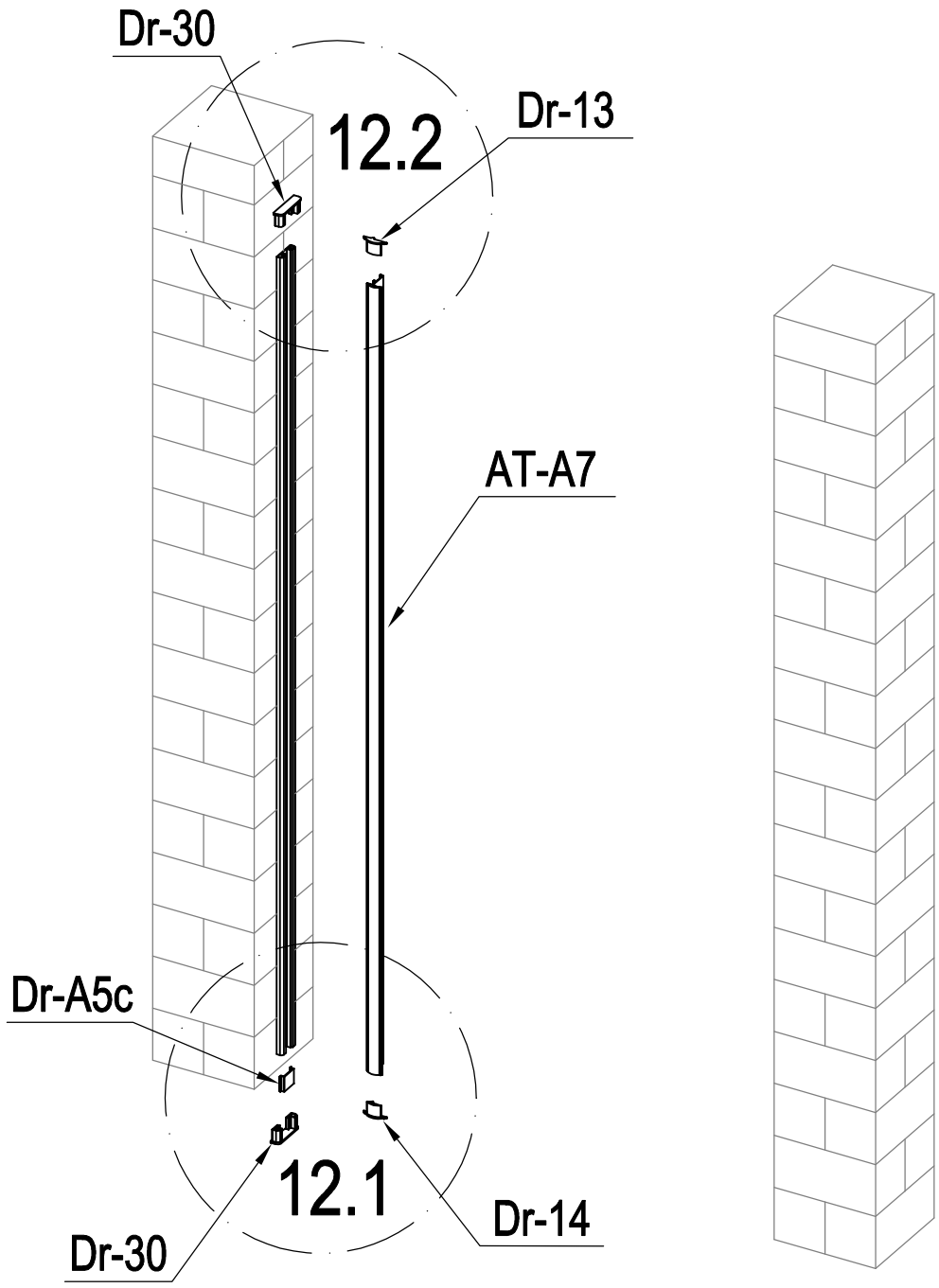

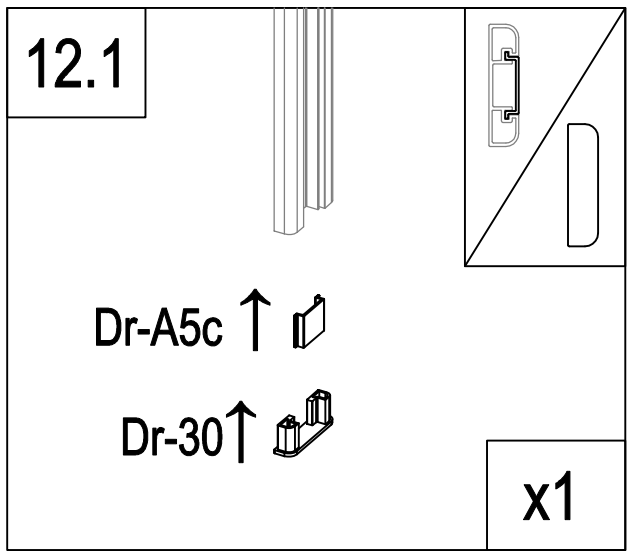

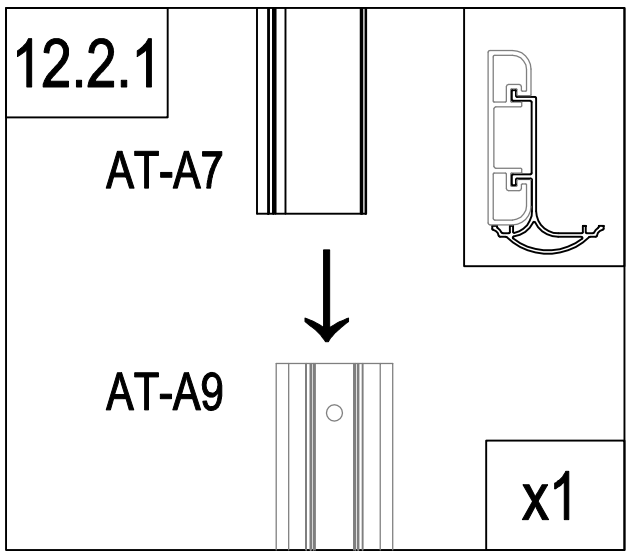

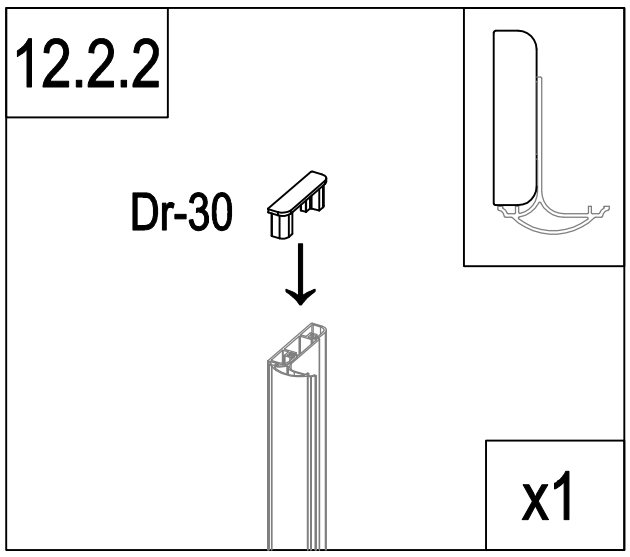

	AT-A7	1
	Dr-13	1
	Dr-14	1
	Dr-30	2
	Dr-A5c	1

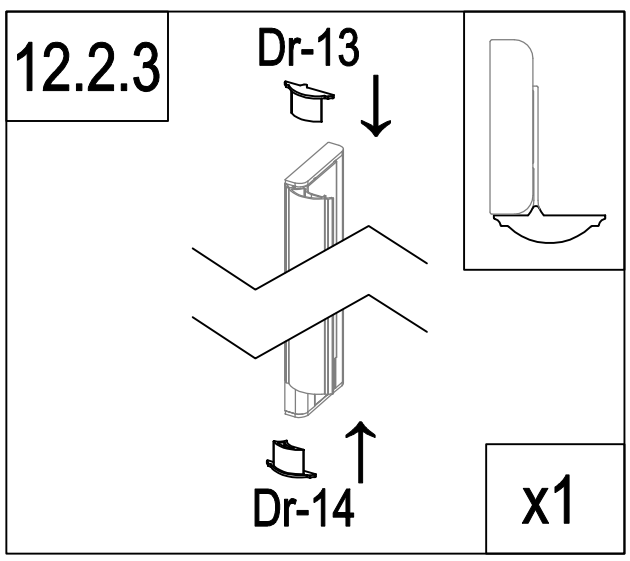

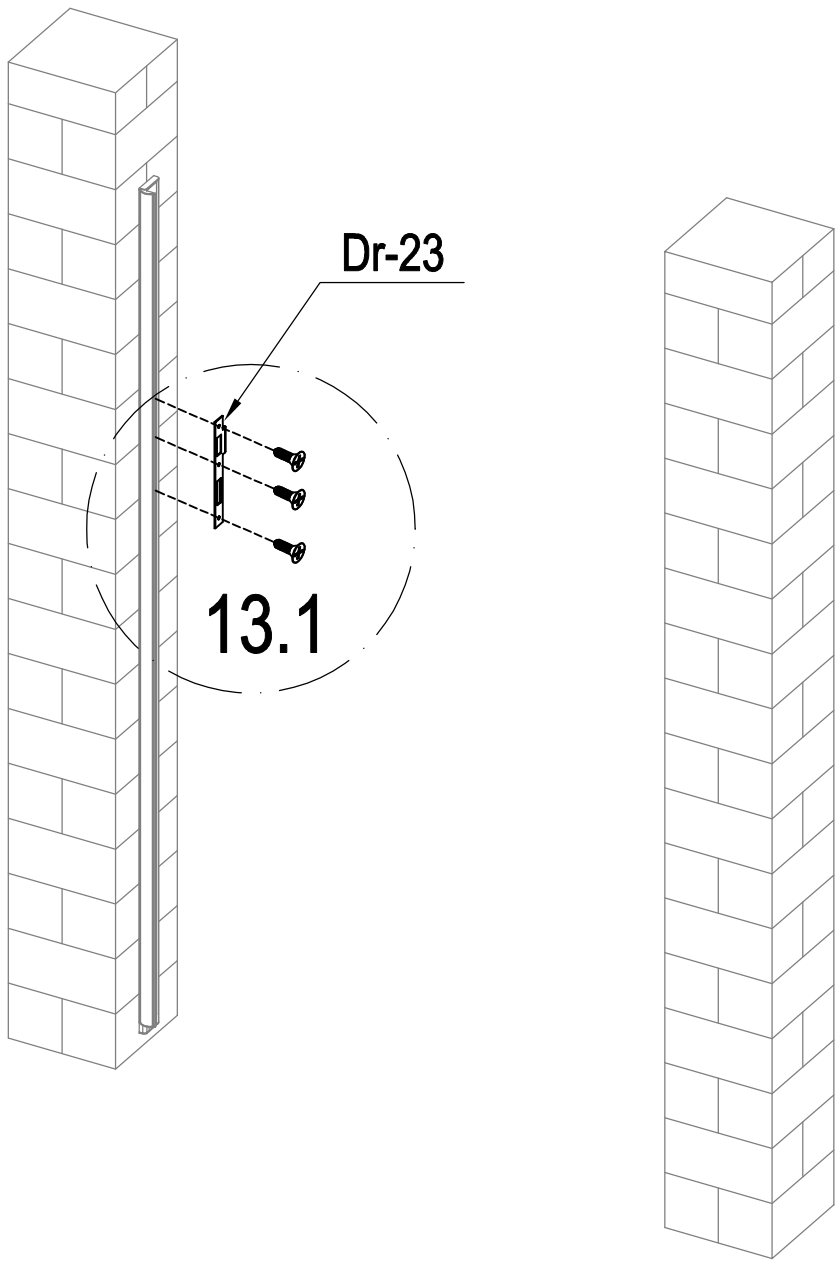

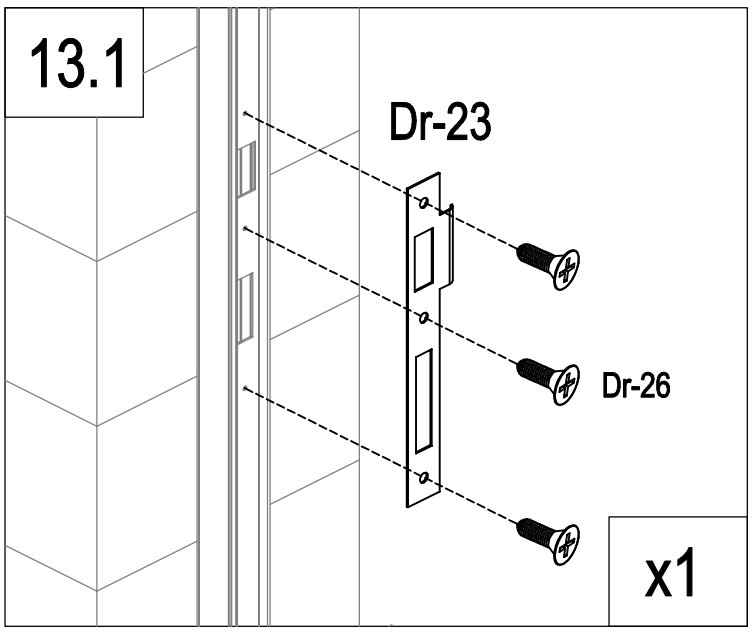

	Dr-23	1
	Dr-26	3

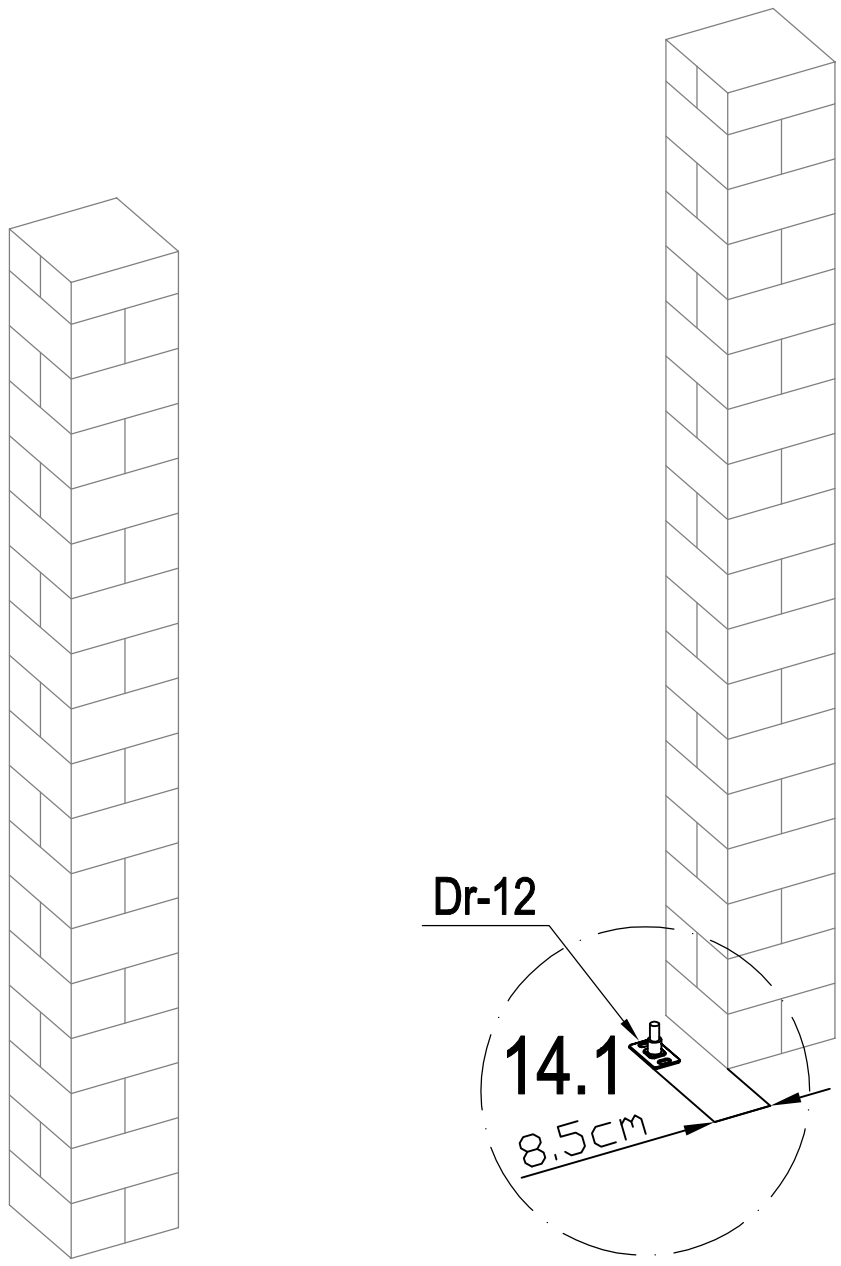

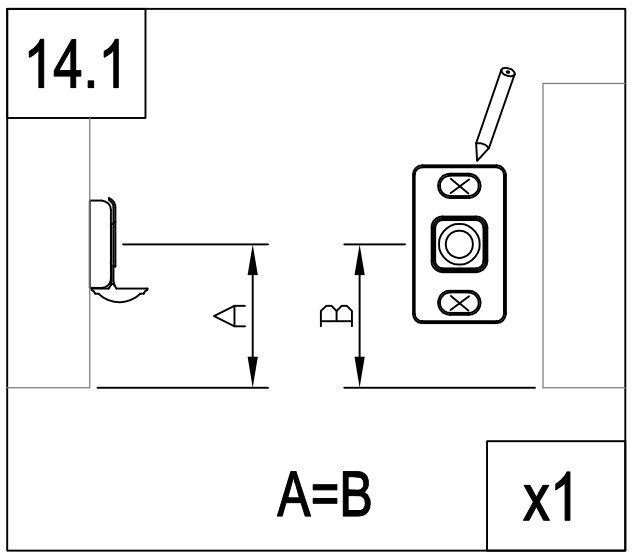

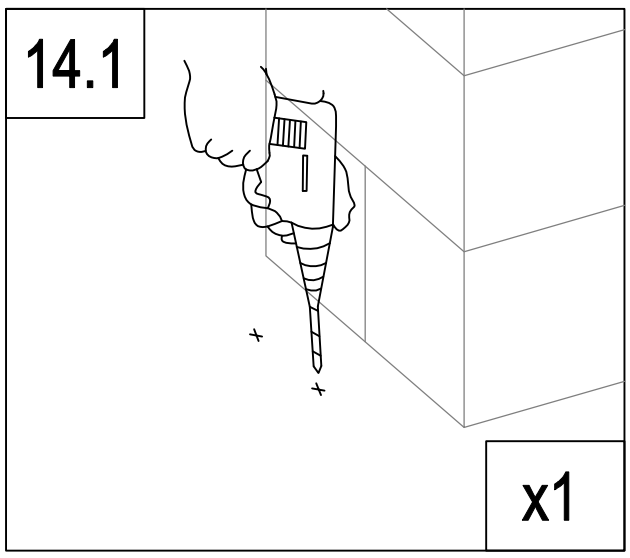

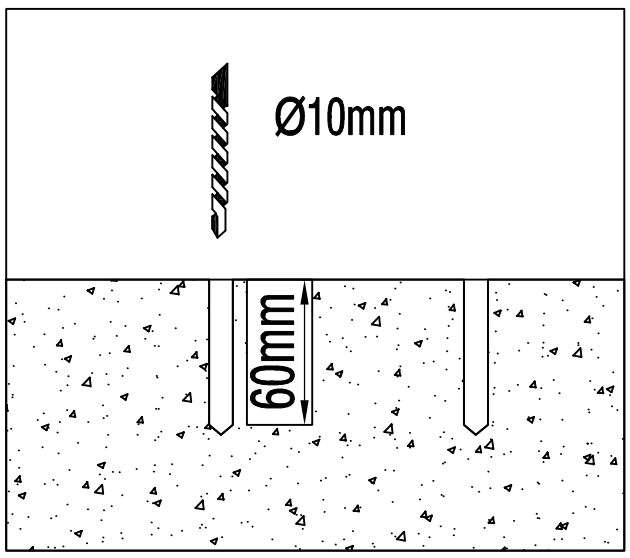

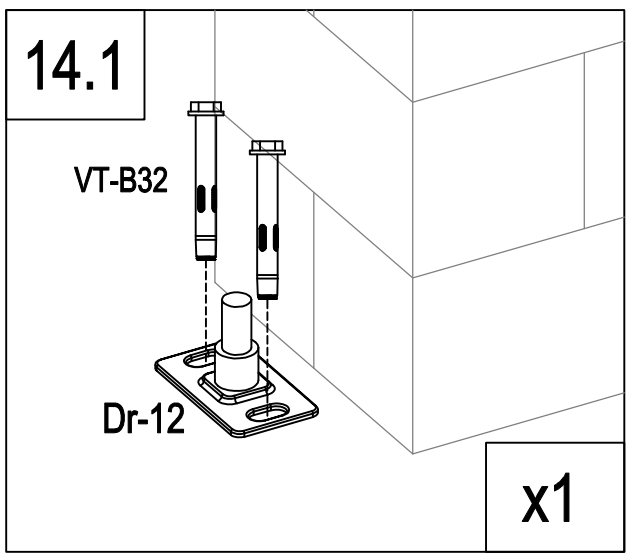

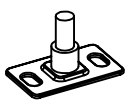	Dr-12	1
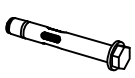	VT-B32	2

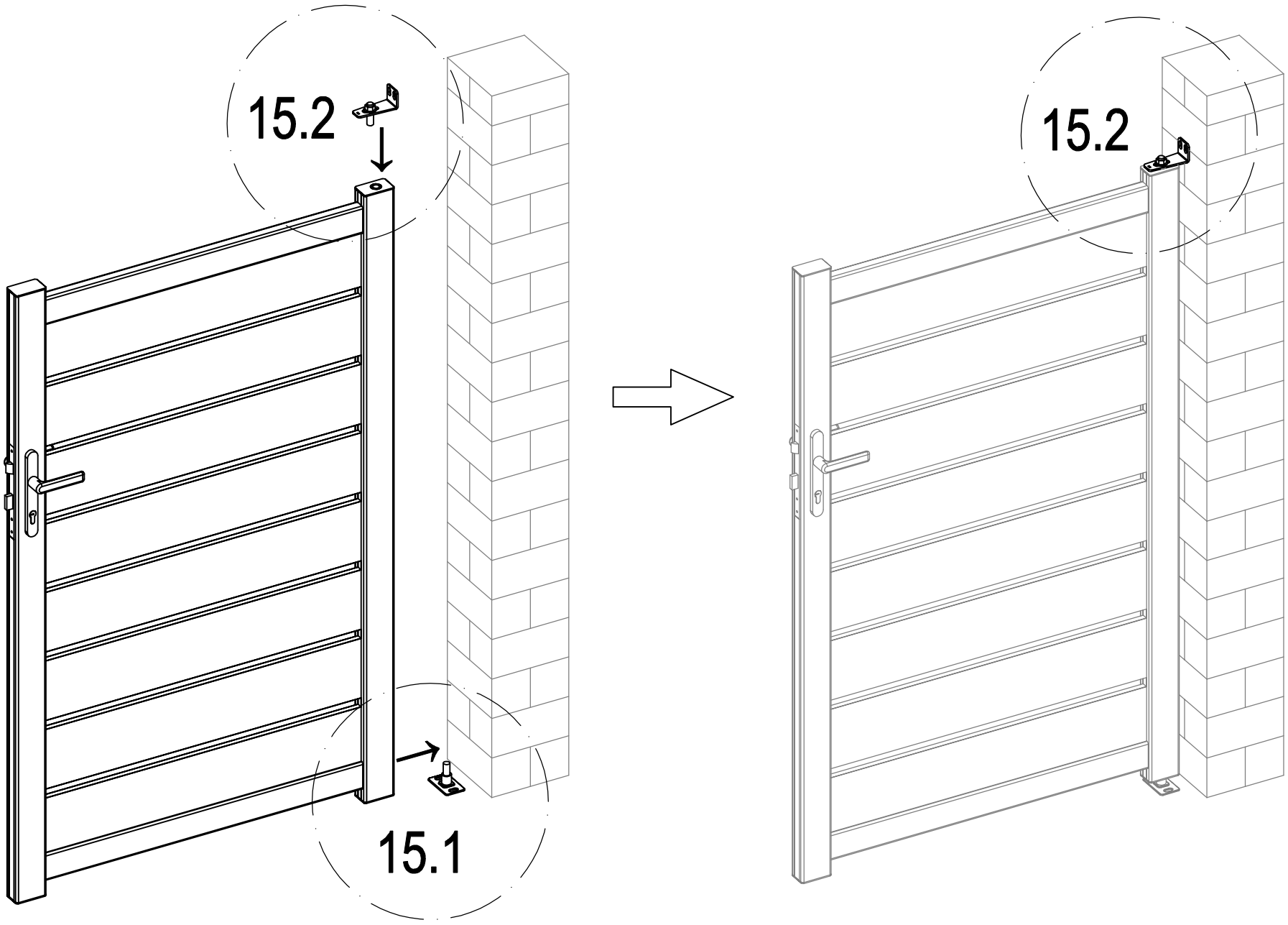

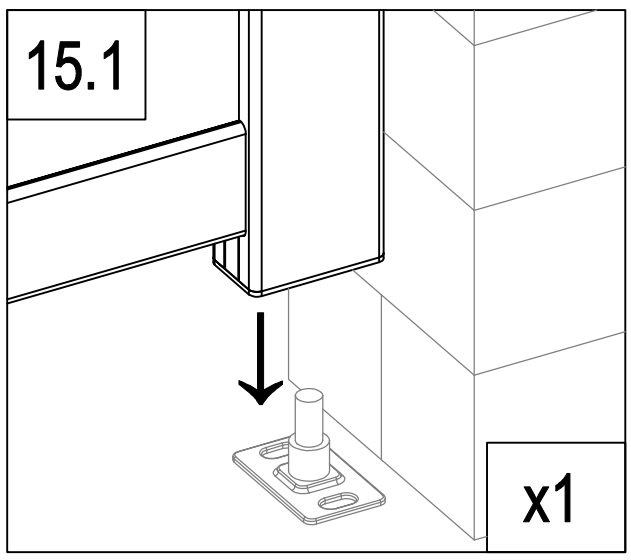

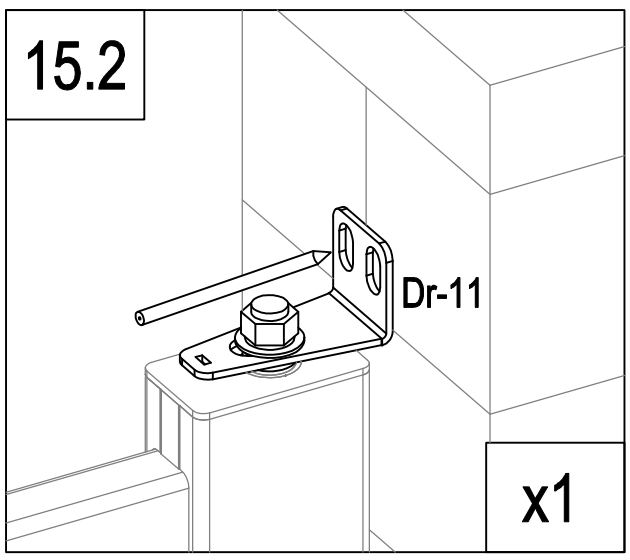

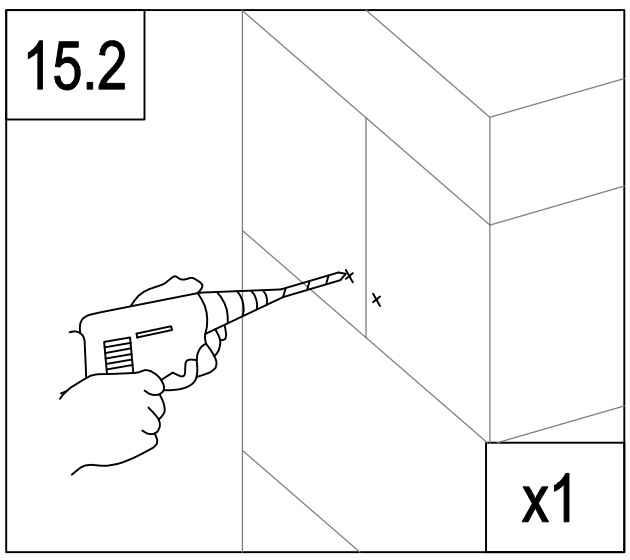

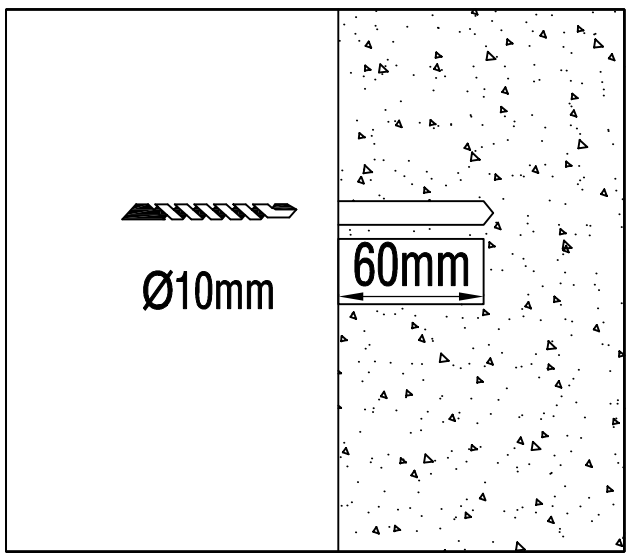

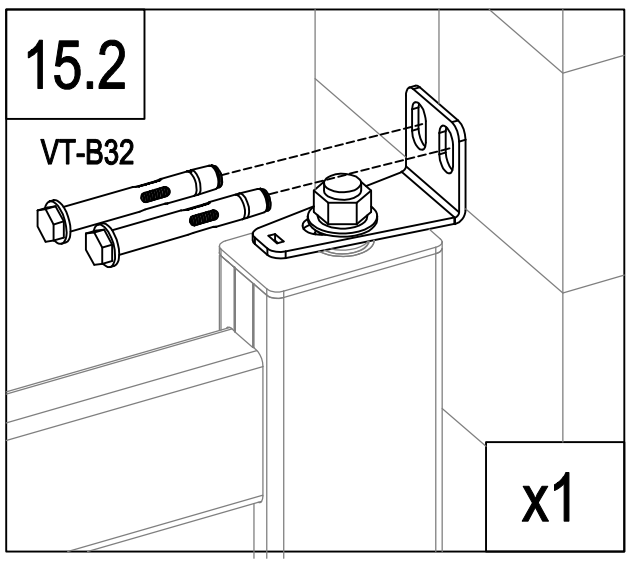

	Dr-11	1
	VT-B32	2

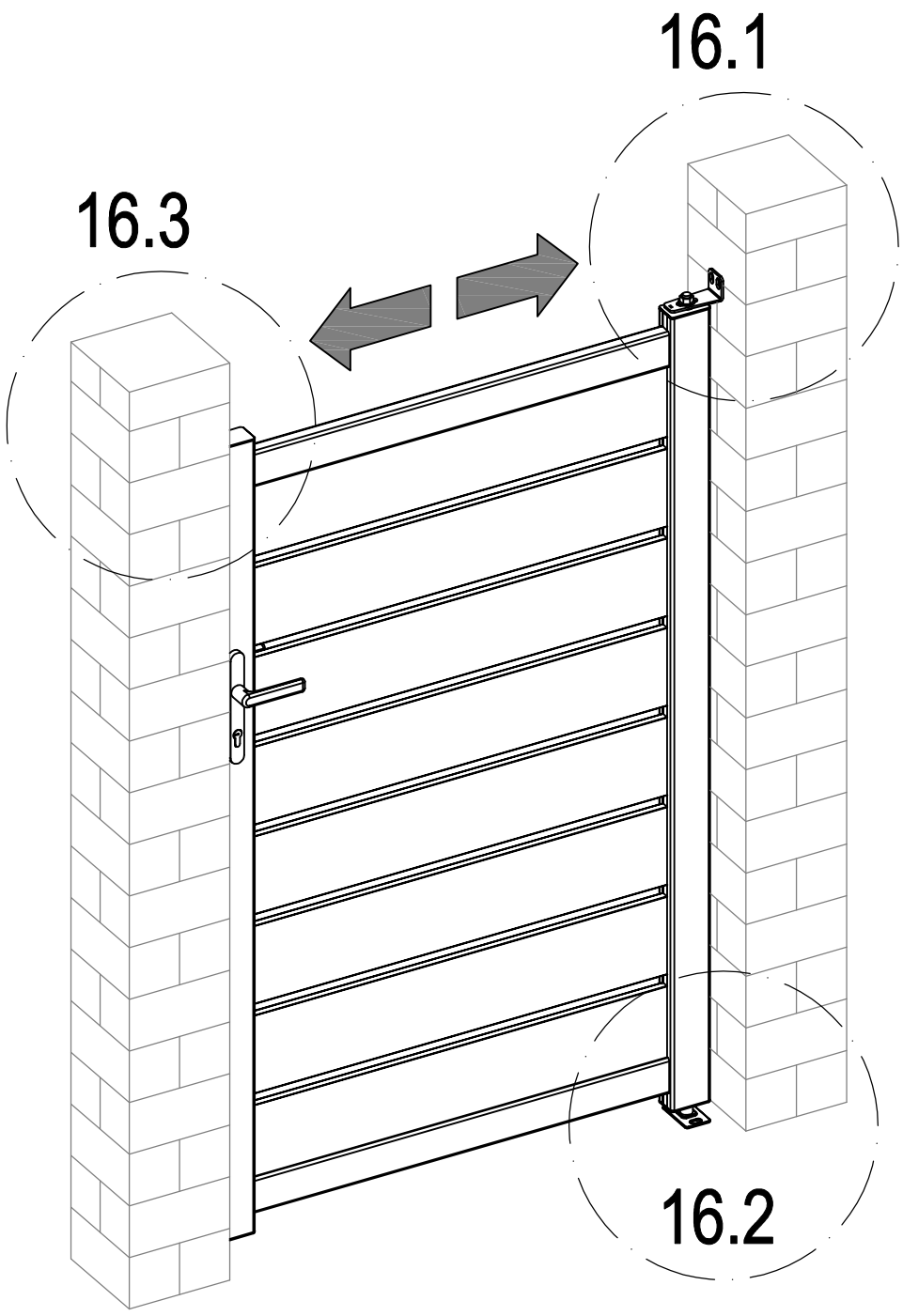
16.1
16.3
16.2

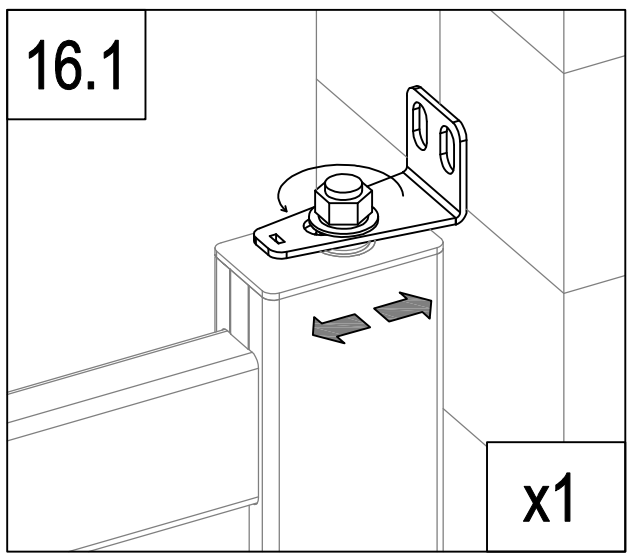
16.1
x1

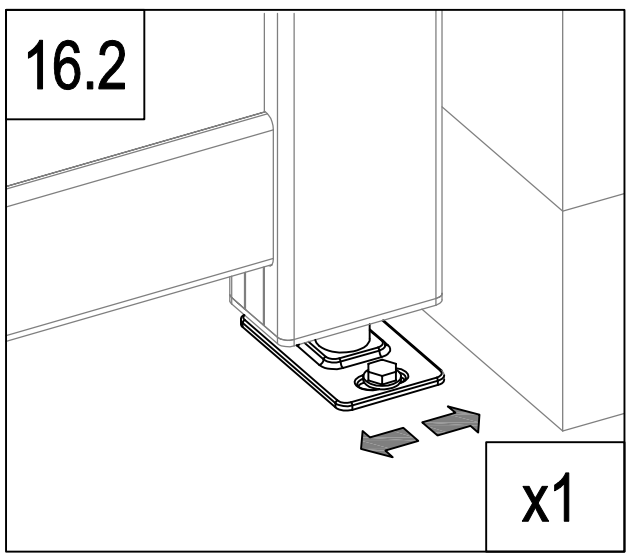
16.2
x1

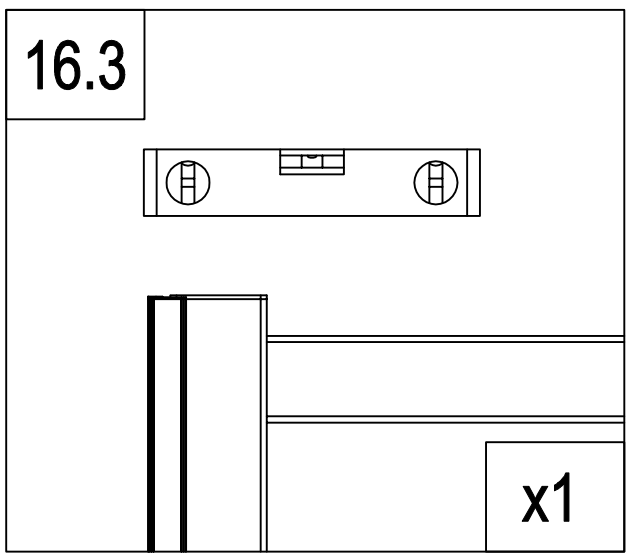
16.3
x1

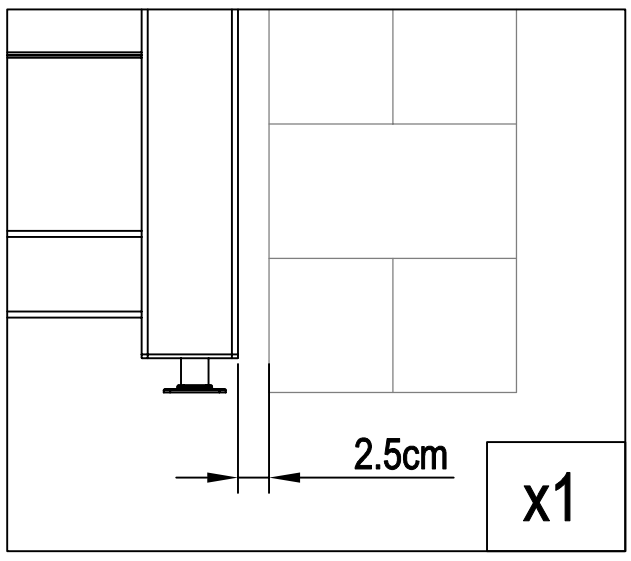
2.5cm
x1

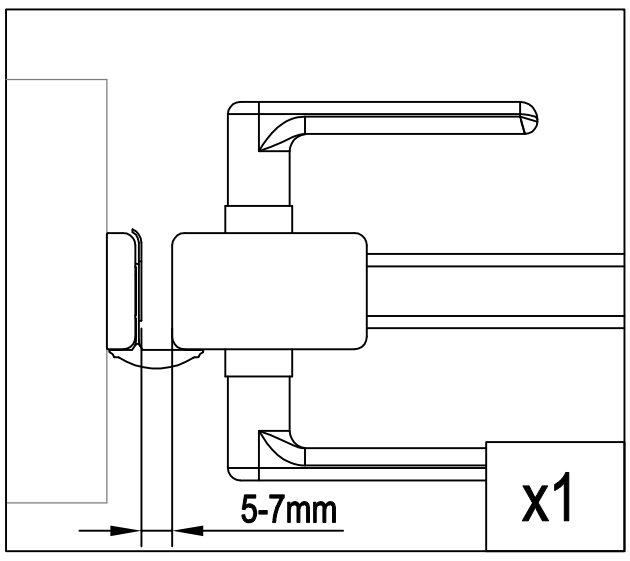
5-7mm
x1

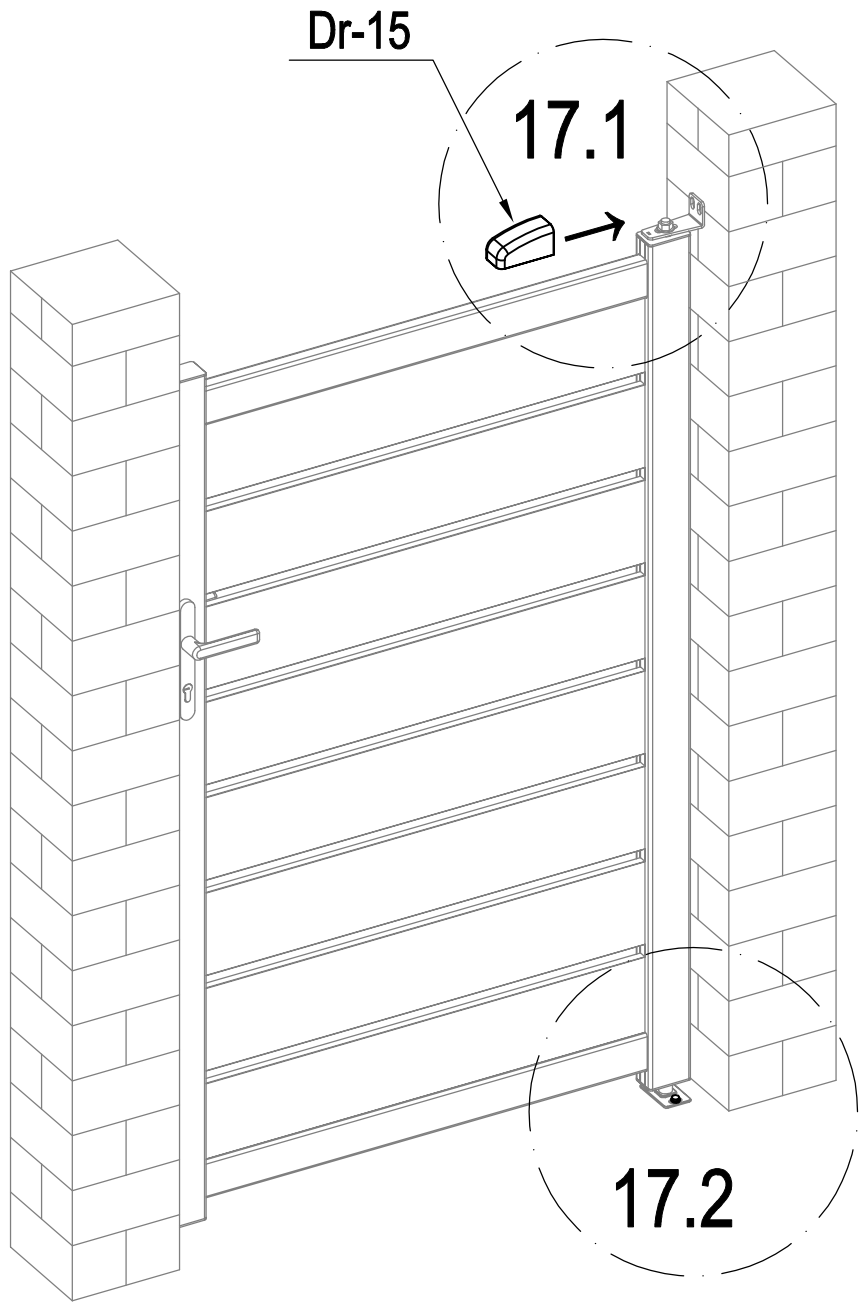

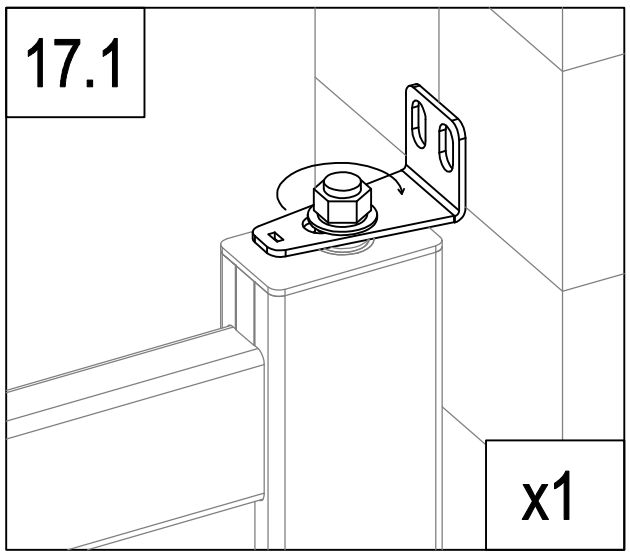

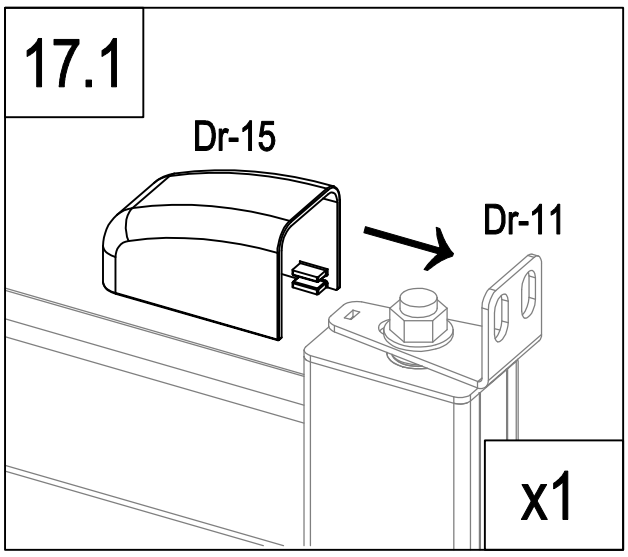

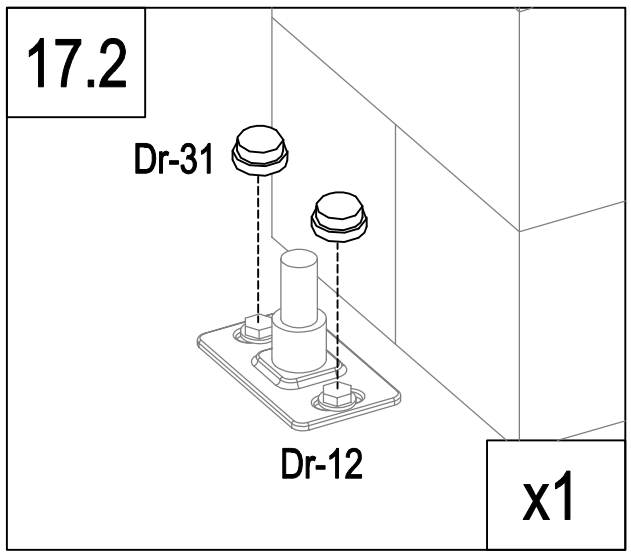

	Dr-15	1
	Dr-31	2

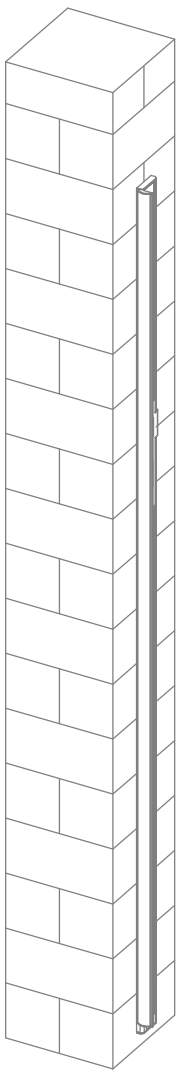

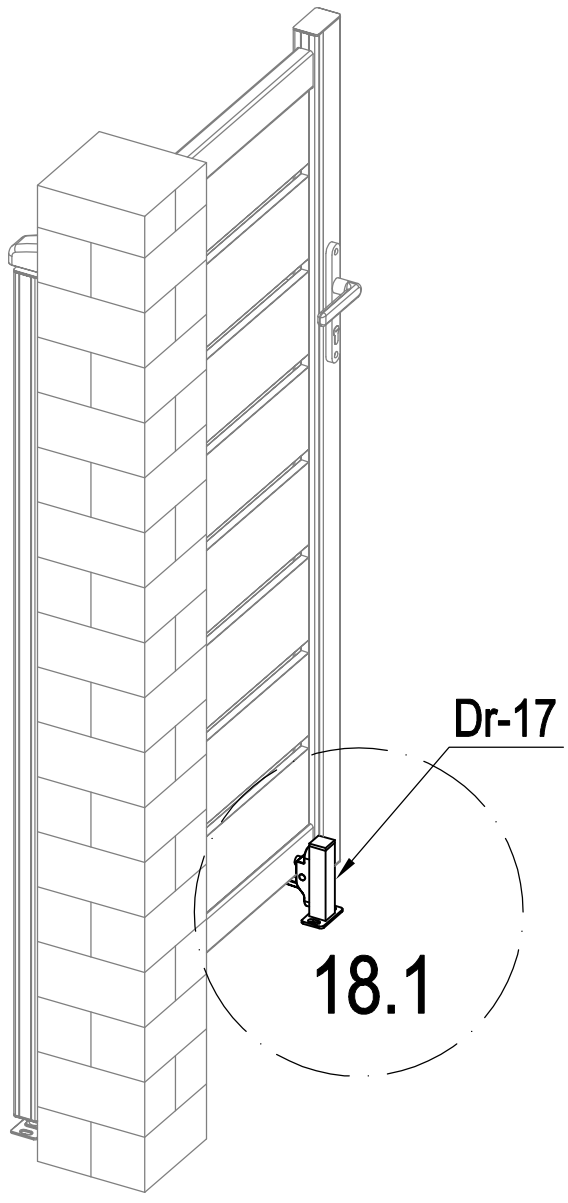

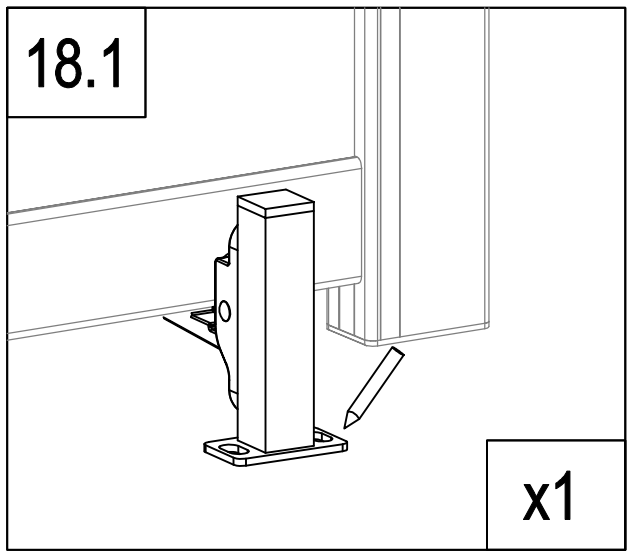

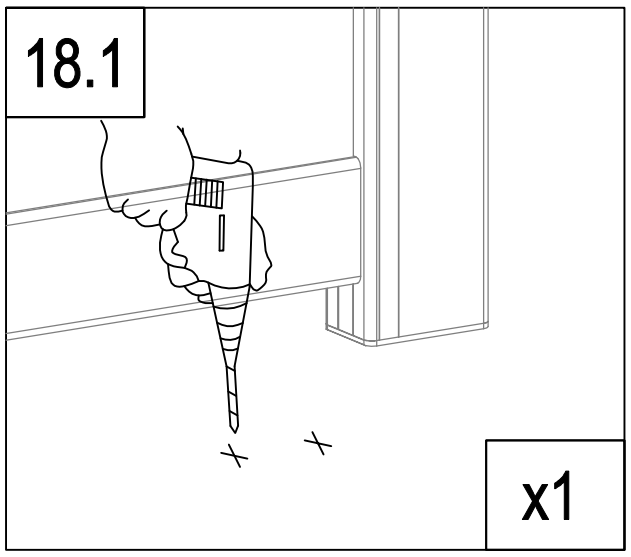

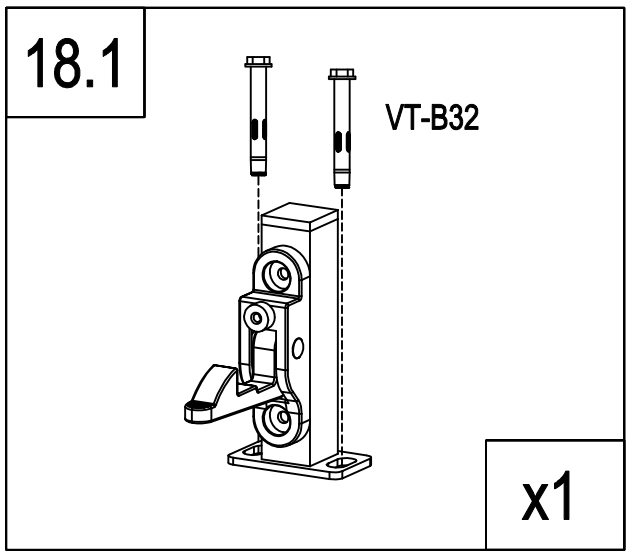

	VT-B32	2
	Dr-17	1