INSTRUCTION MANUAL

Tess HL Gold Black 40
102545

1

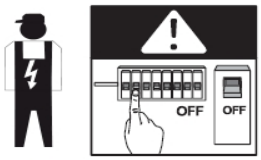

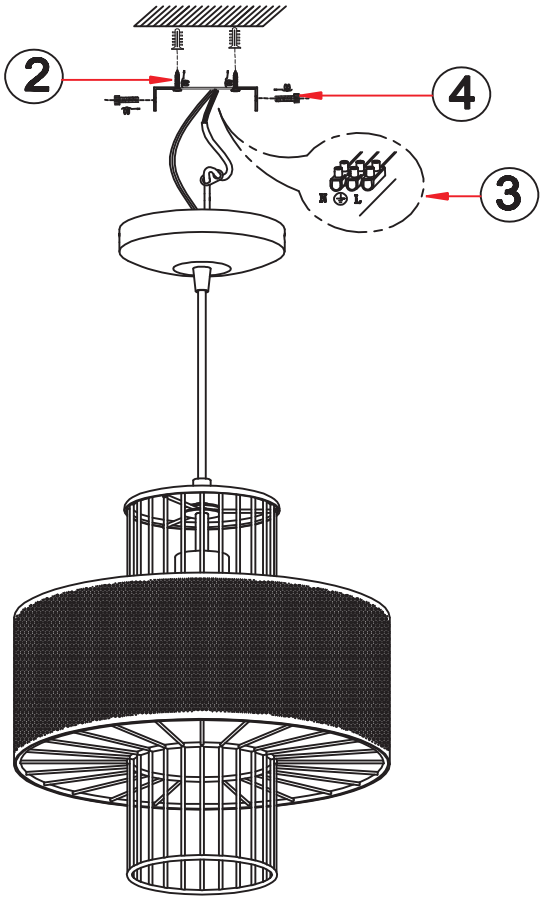

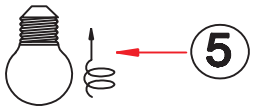

6

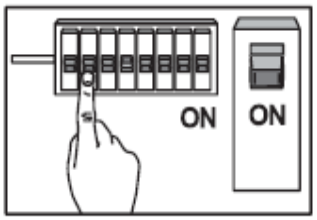

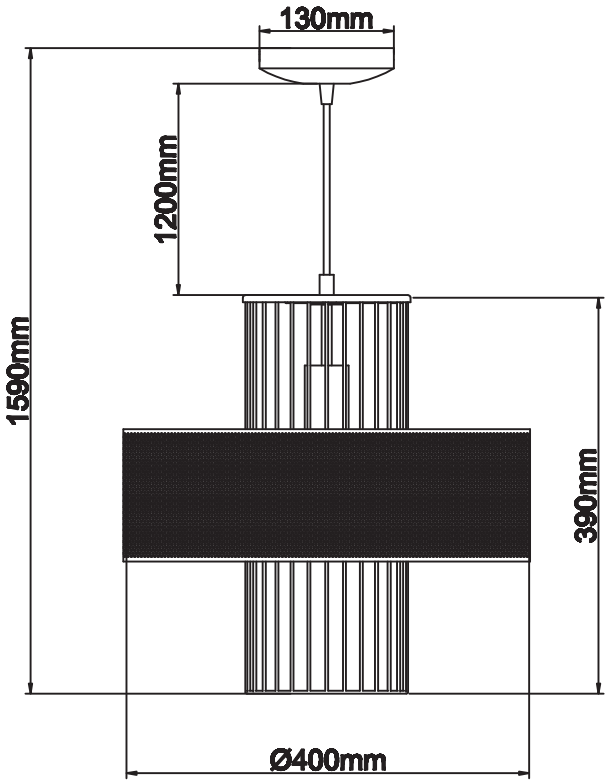

FittinQ B.V.
Smaragdweg 52, 5527 LB Hapert, The Netherlands
www.qazqa.nl

QAZQA