CASANOOV

# EIGER 300C180

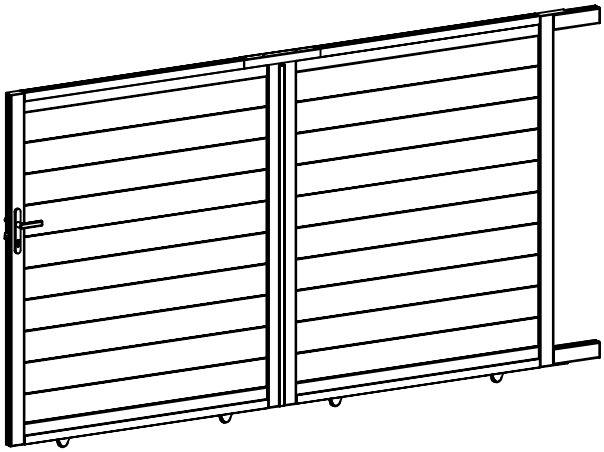

| | |
|---|---|
| COM-000095 | [x1] |
| COM-000096 | [x1] |
| COM-000097 | [x1] |

FR EN ES DE IT NL PL PT CE

NOTICE DE MONTAGE / INSTRUCTION MANUAL / MANUAL DE MONTAJE / MONTAGEANLEITUNG / MANUALE DI MONTAGGIO / MONTAGEHANDLEIDING / INSTRUKCJA MONTAŻU

# Ext.

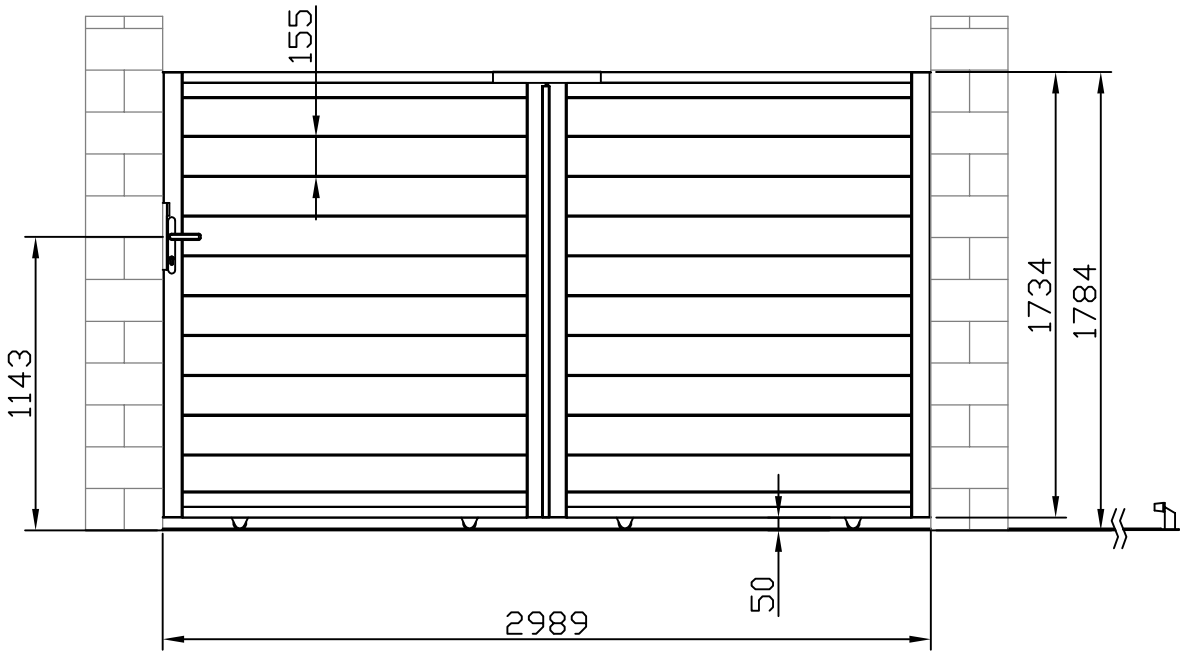


# Int.

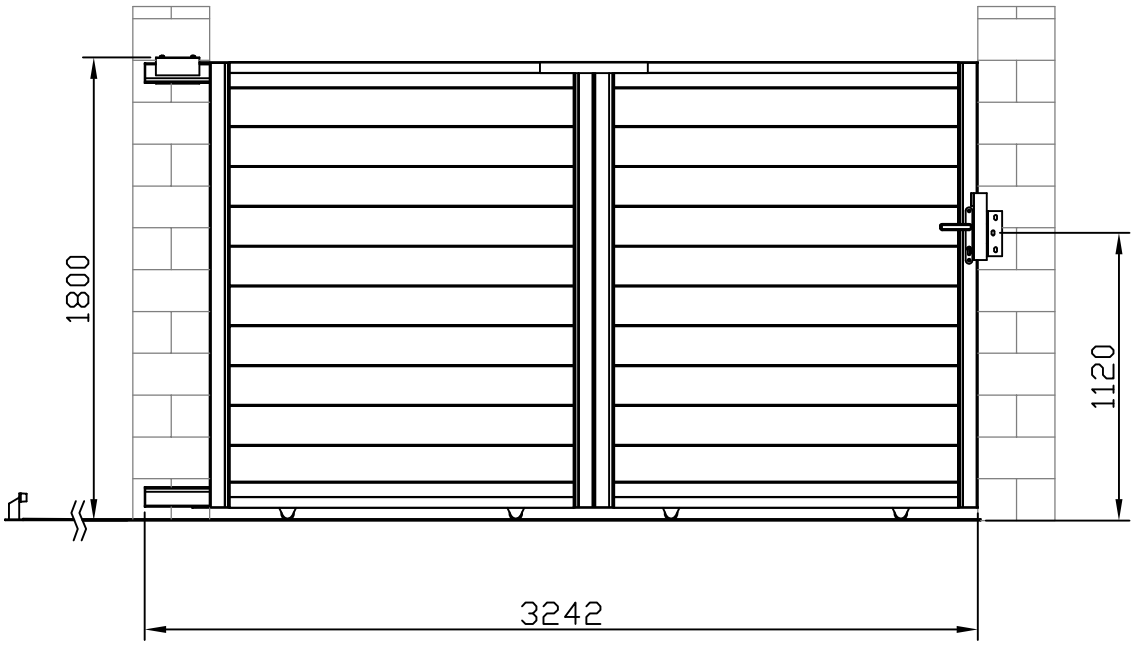

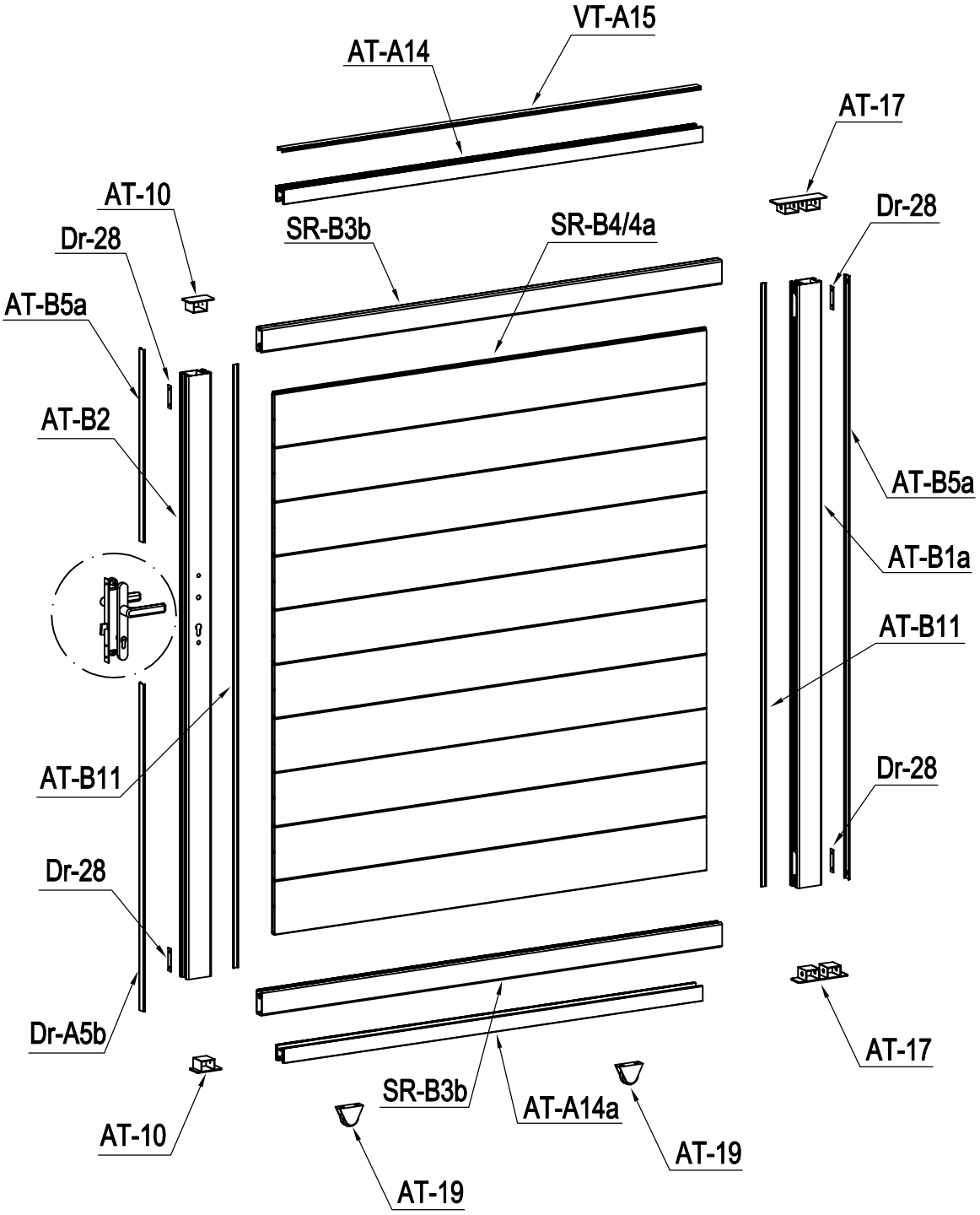
VT-A15
AT-A14
AT-17
AT-10
Dr-28
SR-B3b
SR-B4/4a
Dr-28
AT-B5a
AT-B2
AT-B5a
AT-B1a
AT-B11
AT-B11
Dr-28
Dr-28
Dr-A5b
AT-17
SR-B3b
AT-A14a
AT-10
AT-19
AT-19

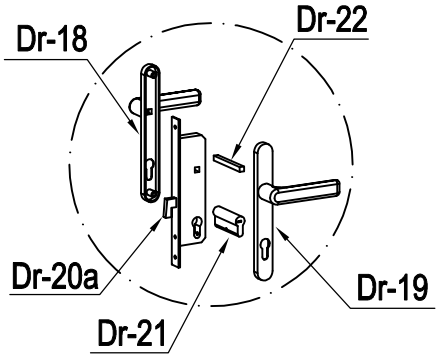
Dr-18
Dr-22
Dr-20a
Dr-19
Dr-21

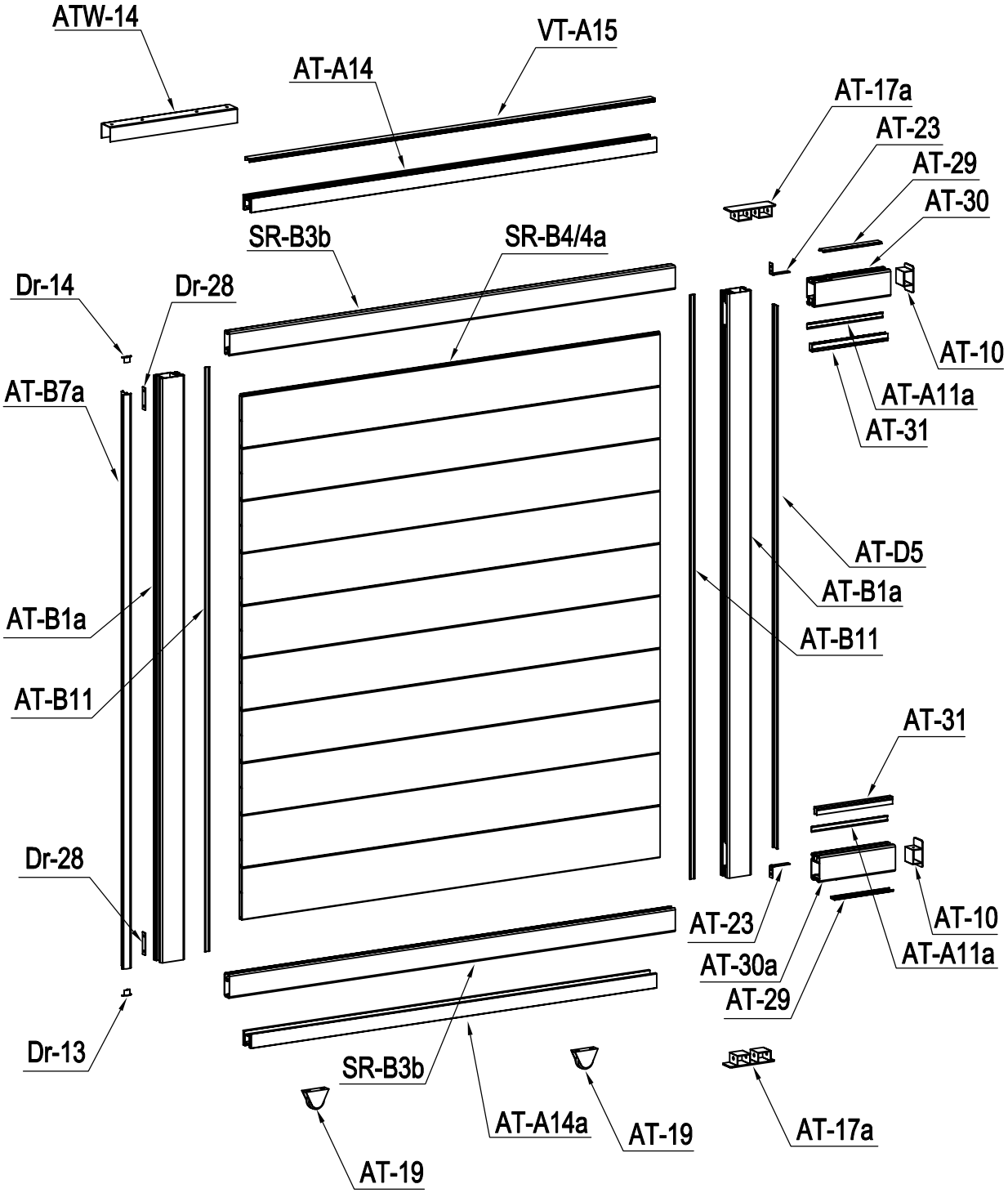
ATW-14
VT-A15
AT-A14
AT-17a
AT-23
AT-29
AT-30
SR-B3b
SR-B4/4a
Dr-14
Dr-28
AT-10
AT-B7a
AT-A11a
AT-31
AT-D5
AT-B1a
AT-B1a
AT-B11
AT-B11
AT-31
Dr-28
AT-23
AT-10
AT-30a
AT-A11a
AT-29
Dr-13
SR-B3b
AT-A14a
AT-19
AT-17a
AT-19

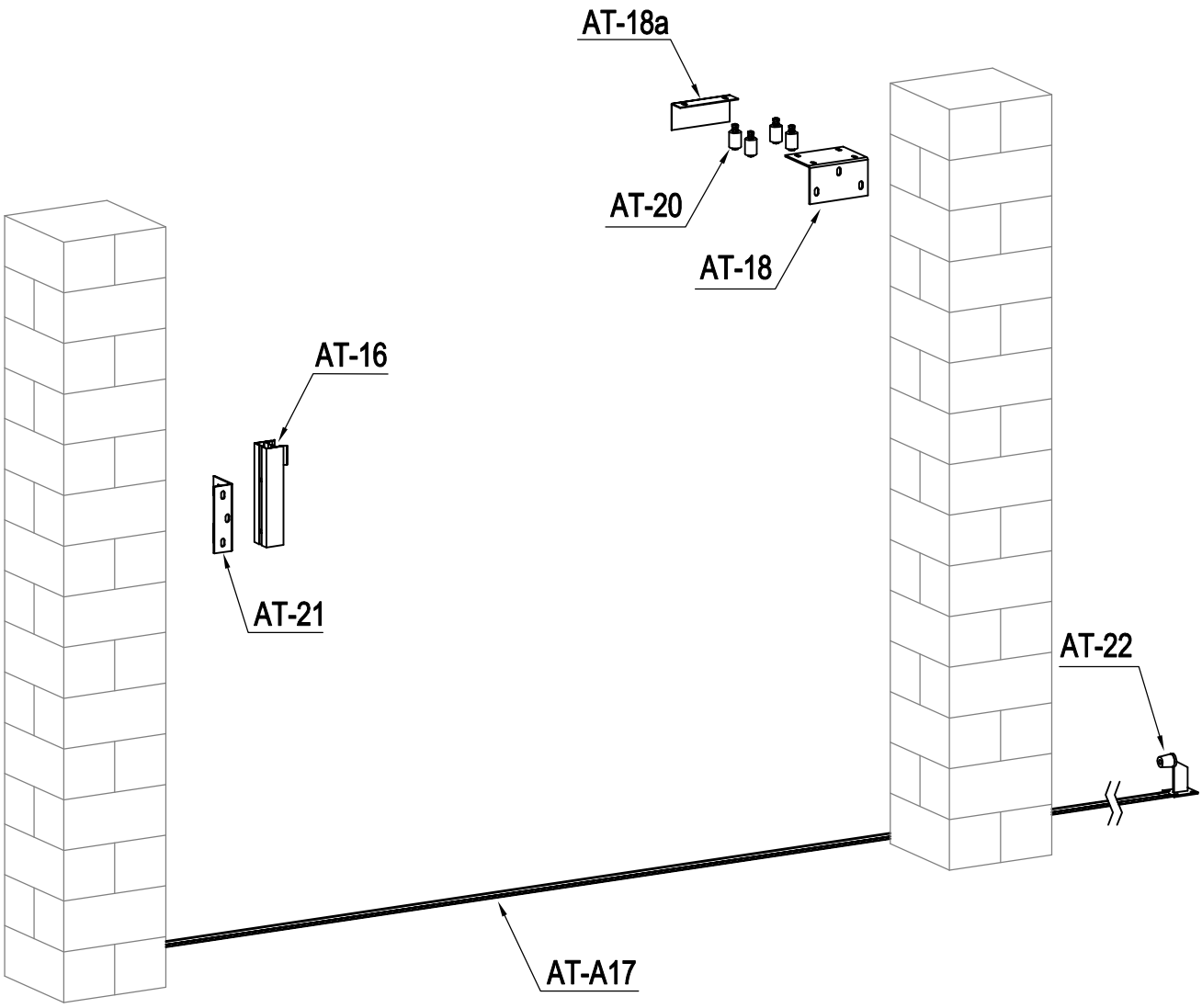
AT-18a
AT-20
AT-18
AT-16
AT-21
AT-22
AT-A17

# PART LIST

| IMAGE | NO. | L.(mm) | QTY |
|---|---|---|---|
| | AT-B1a | 1728 | 3 |
| | AT-B2 | 1728 | 1 |
| | AT-30 | 250 | 1 |
| | AT-30a | 250 | 1 |
| | SR-B3b | 1471 | 4 |
| | SR-B4 | 1380 | 18 |
| | SR-B4a | 1380 | 2 |
| | AT-D5 | 1603 | 1 |
| | AT-B5a | 550.5 | 1 |
| | Dr-A5b | 937 | 1 |
| | AT-B5b | 1728 | 1 |
| | AT-29 | 193 | 2 |
| | AT-B11 | 1728 | 4 |
| | AT-A11a | 250 | 2 |
| | AT-31 | 250 | 2 |
| | AT-B7a | 1675 | 1 |
| | AT-A14 | 1338 | 2 |
| | AT-A14a | 1338 | 2 |
| | VT-A15 | 1337 | 2 |
| | AT-16 | 260 | 1 |
| | AT-A17 | 1212 | 5 |
| | AT-17 | | 2 |
| | AT-17a | | 2 |
| | AT-10 | | 4 |
| | Dr-13 | | 1 |
| | Dr-14 | | 1 |
| | AT-18 | | 1 |

| IMAGE | NO. | L.(mm) | QTY |
|---|---|---|---|
| | AT-18a | | 1 |
| | AT-19 | | 4 |
| | AT-20 | | 4 |
| | AT-21 | | 1 |
| | AT-22 | | 1 |
| | AT-23 | | 2 |
| | Dr-18 | | 1 |
| | Dr-19 | | 1 |
| | Dr-20a | | 1 |
| | Dr-21 | | 1 |
| | Dr-22 | | 1 |
| | Dr-25 | | 1 |
| | Dr-25a | | 2 |
| | Dr-27 | | 2 |
| | CK-U30 | | 4 |
| | CK-U31 | | 10 |
| | CK-U32 | | 28 |
| | CK-U33 | | 4 |
| | CK-U34 | | 84 |
| | CK-U35 | | 6 |
| | CK-U36 | | 2 |
| | CK-U37 | | 8 |
| | CK-U38 | | 40 |
| | Dr-28 | | 6 |
| | AT-22J | | 7 |
| | ATW-14 | | 1 |
| | | | |

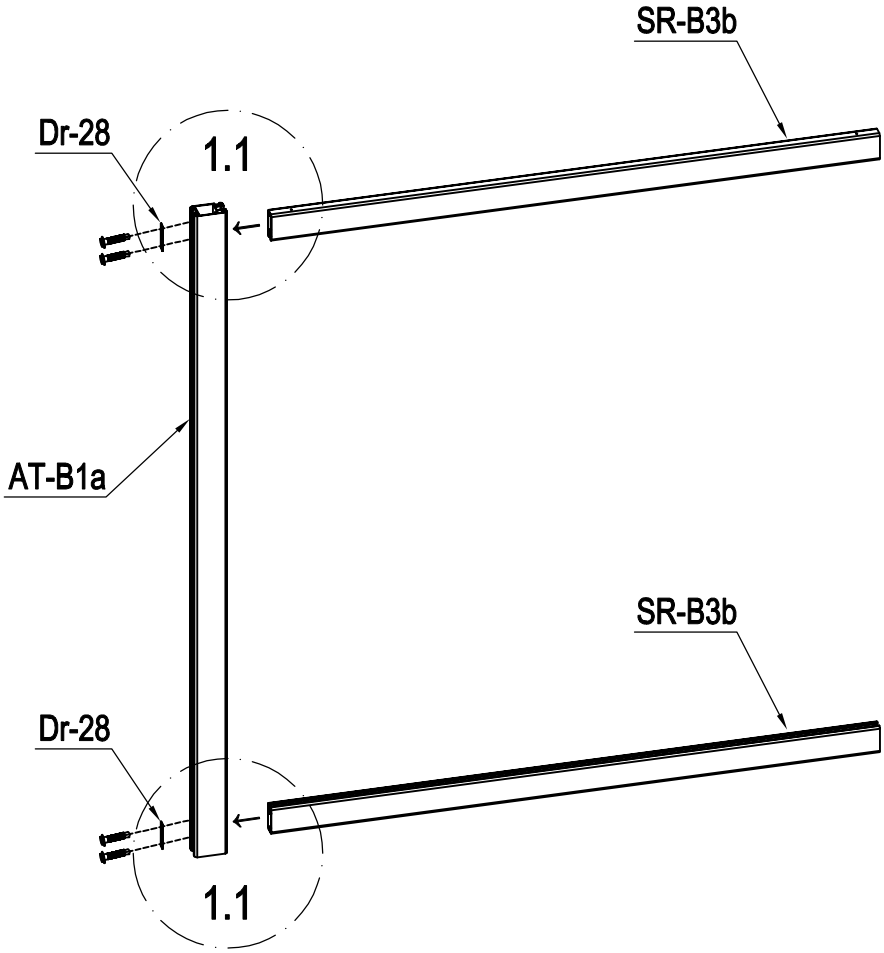


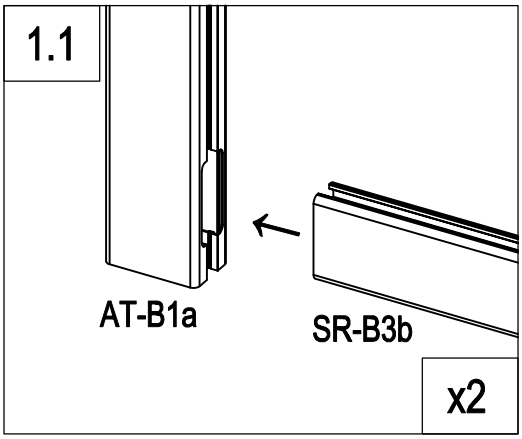


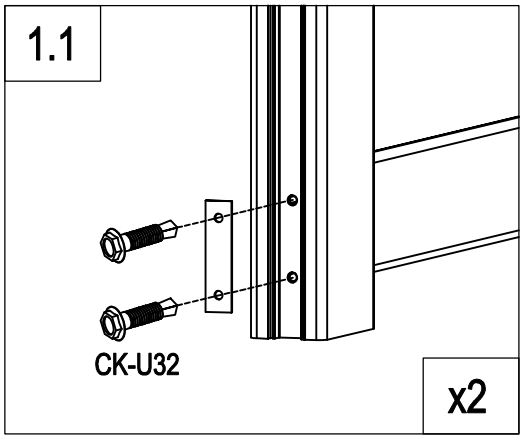


| | | |
|---|---|---|
| | AT-B1a | 1 |
| | SR-B3b | 2 |
| | Dr-28 | 2 |
| | CK-U32 | 4 |

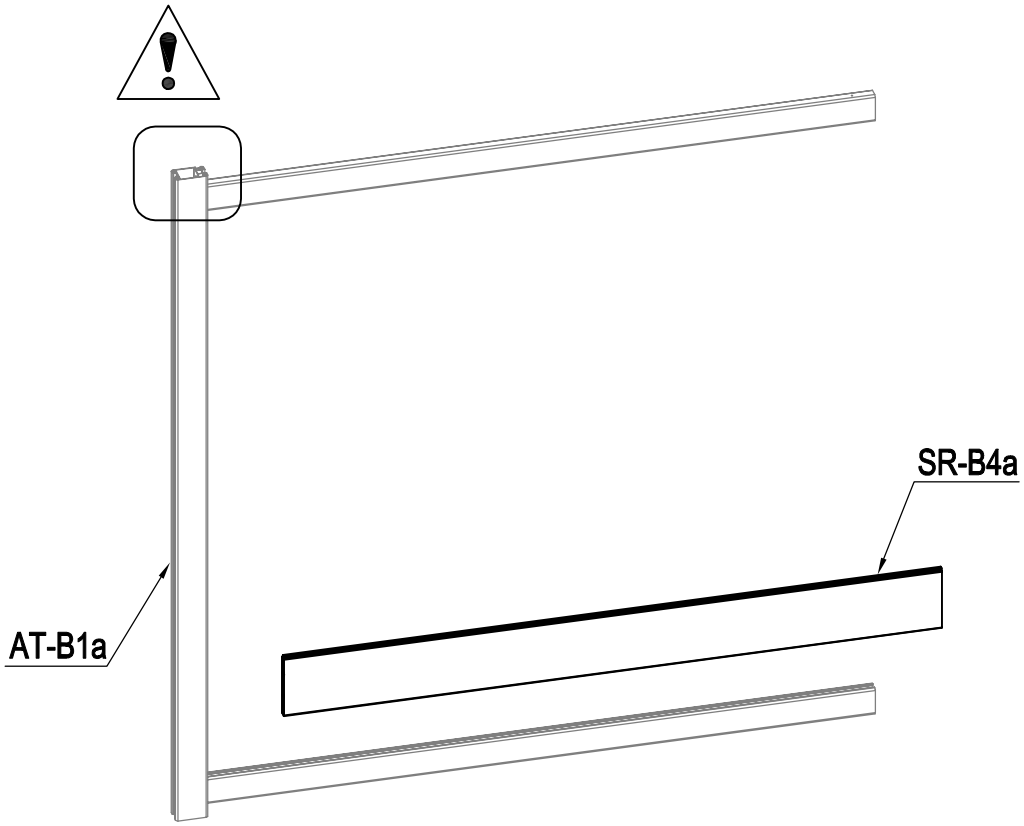


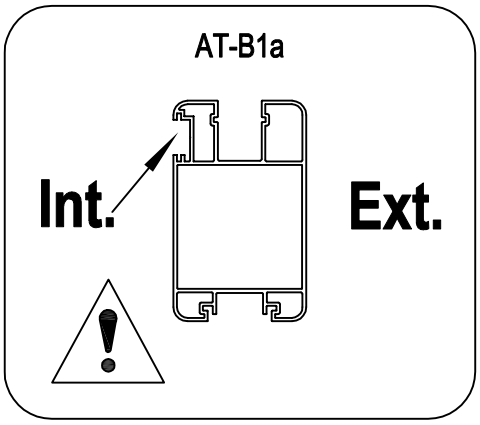


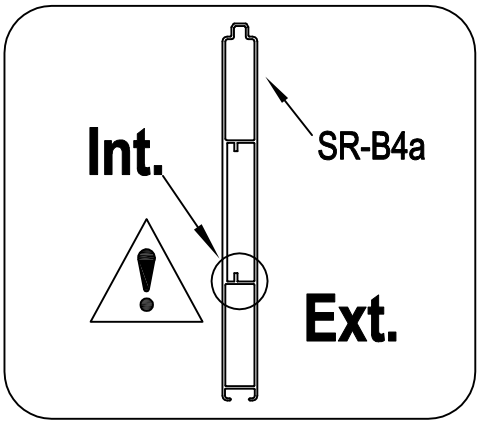


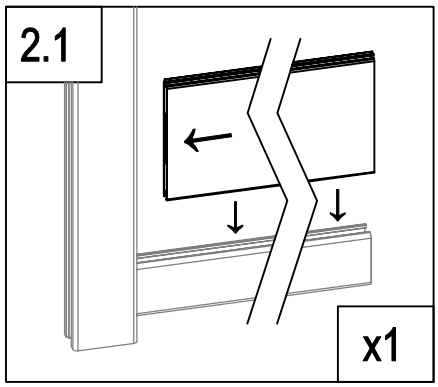


| | | |
|---|---|---|
| | SR-B4a | 1 |

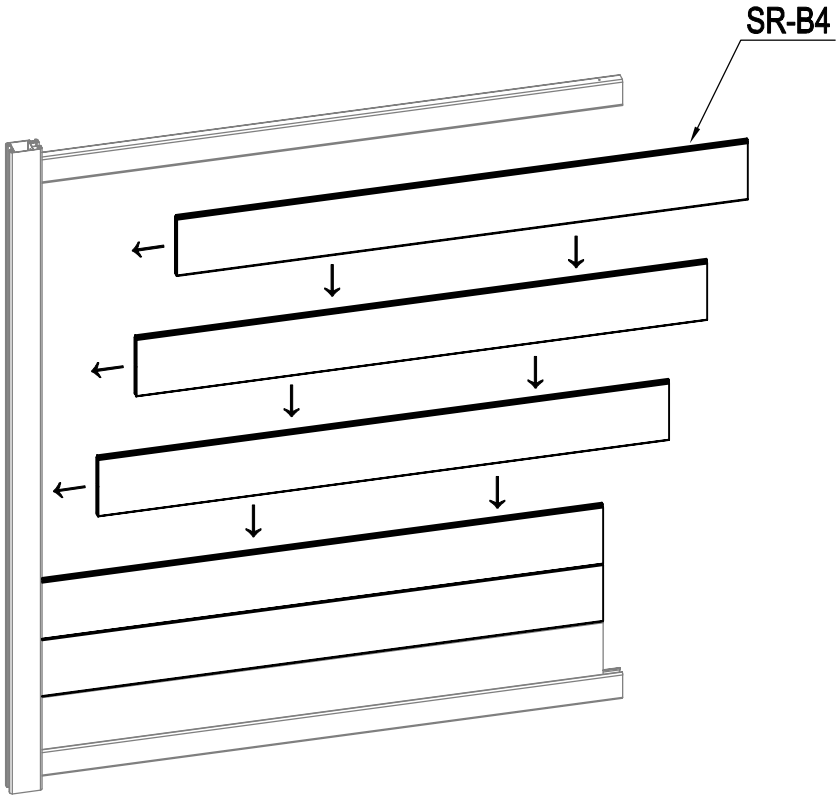


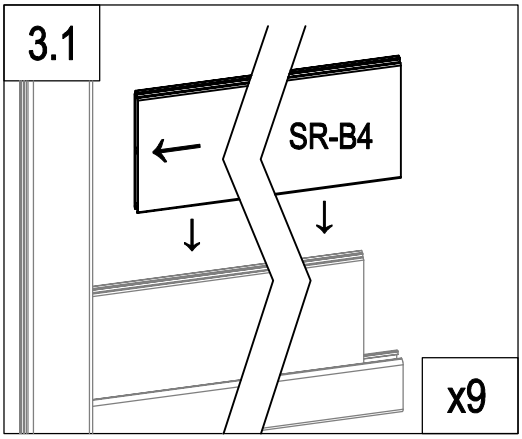


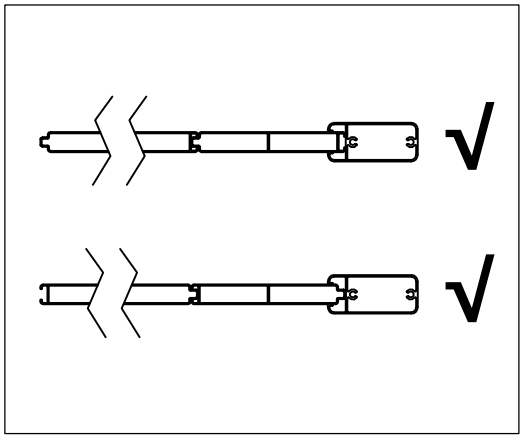

| | | |
|---|---|---|
| | SR-B4 | 9 |

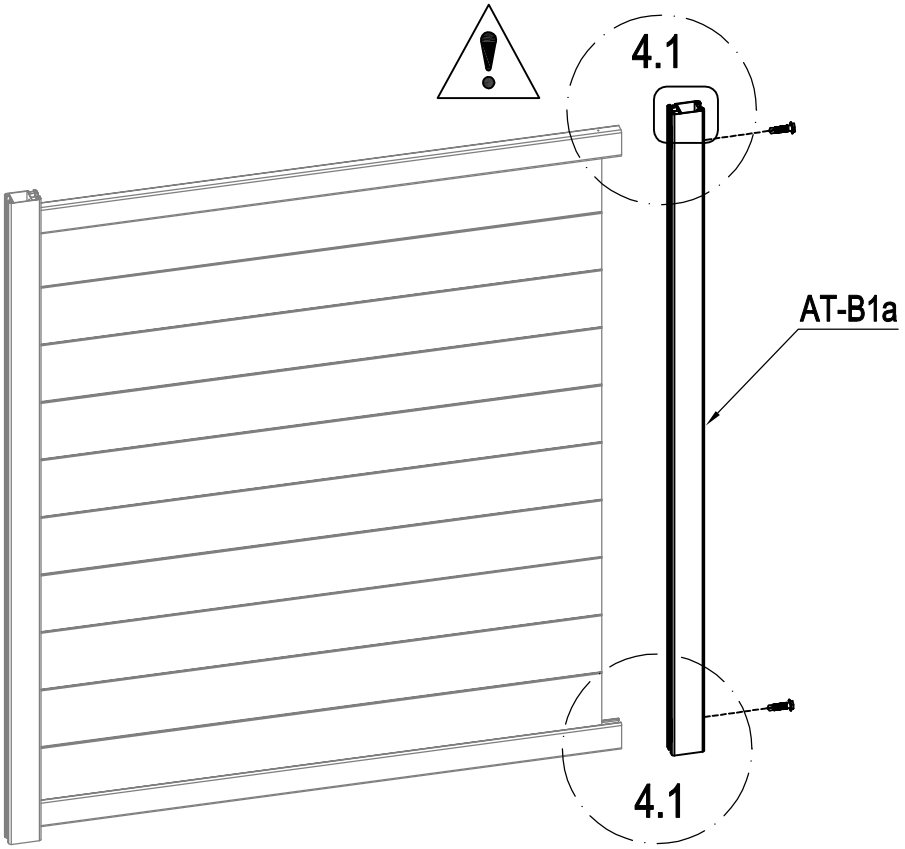


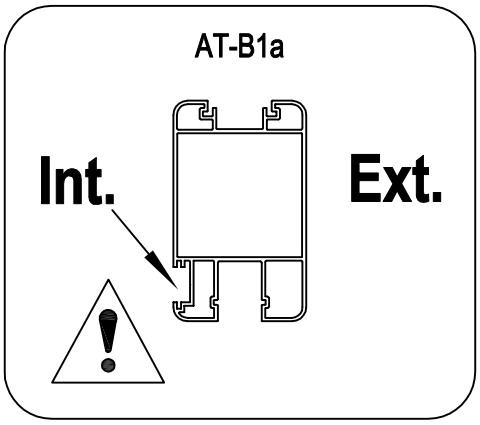


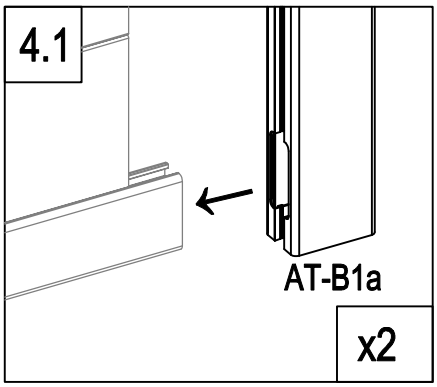


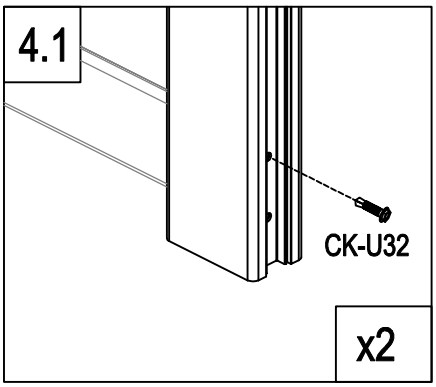


| | | |
|---|---|---|
| | AT-B1a | 1 |
| | CK-U32 | 2 |

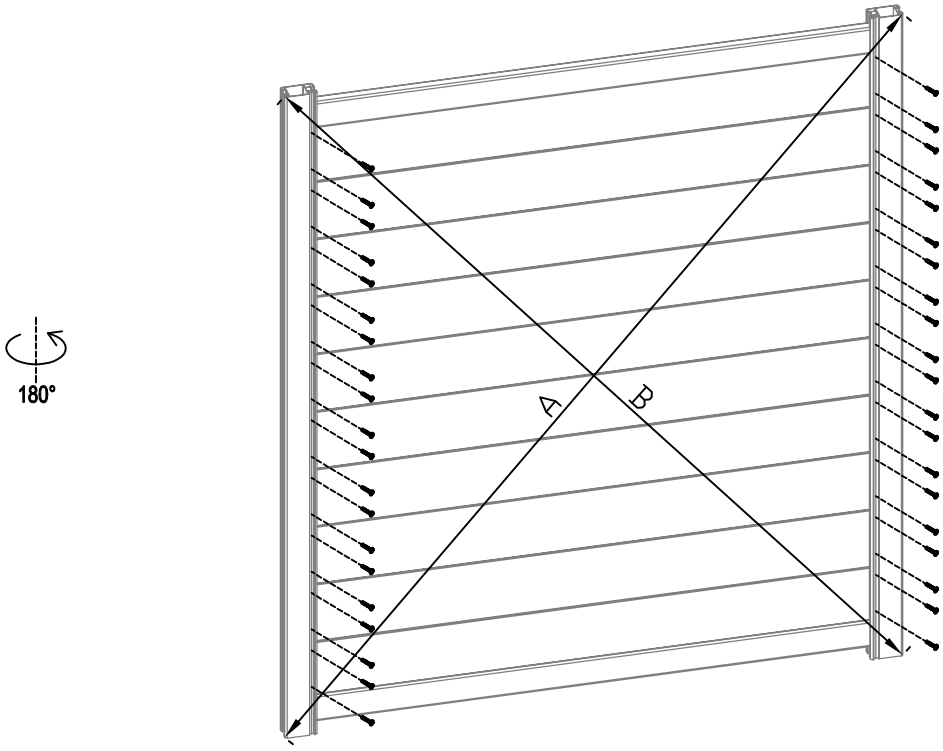


A=B

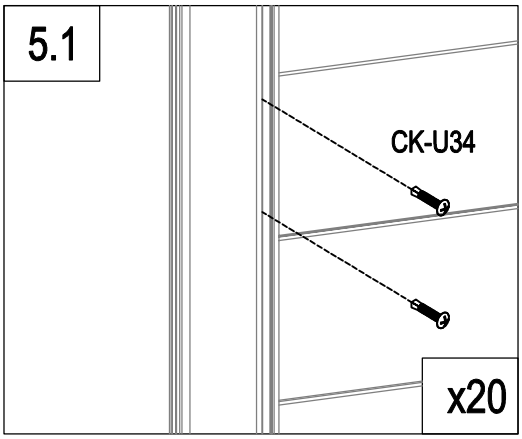


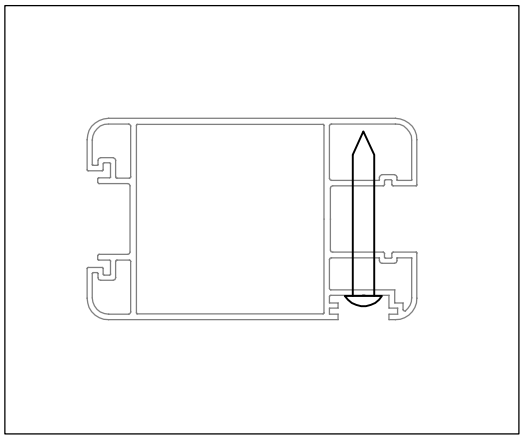

| | | |
|---|---|---|
| | CK-U34 | 40 |

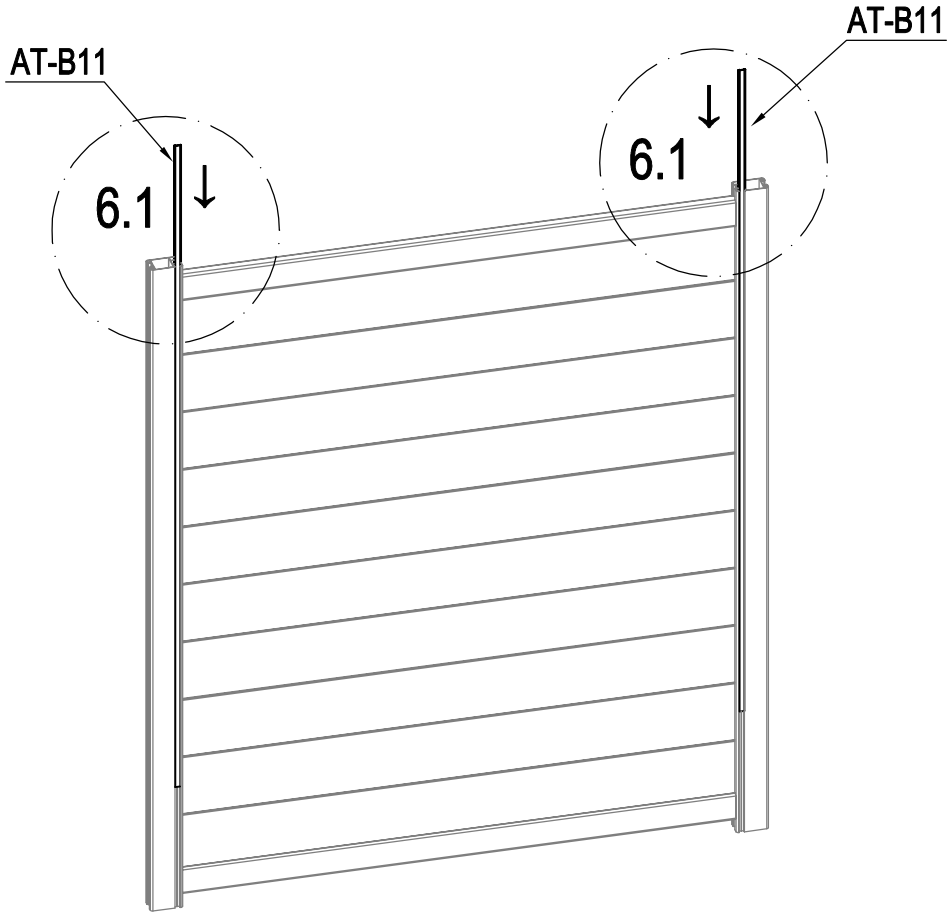


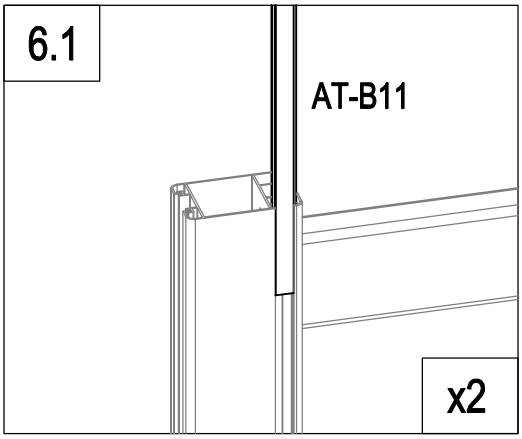


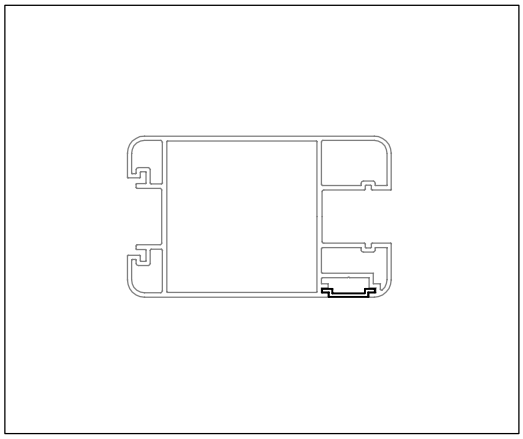

| | | |
|---|---|---|
| | AT-B11 | 2 |

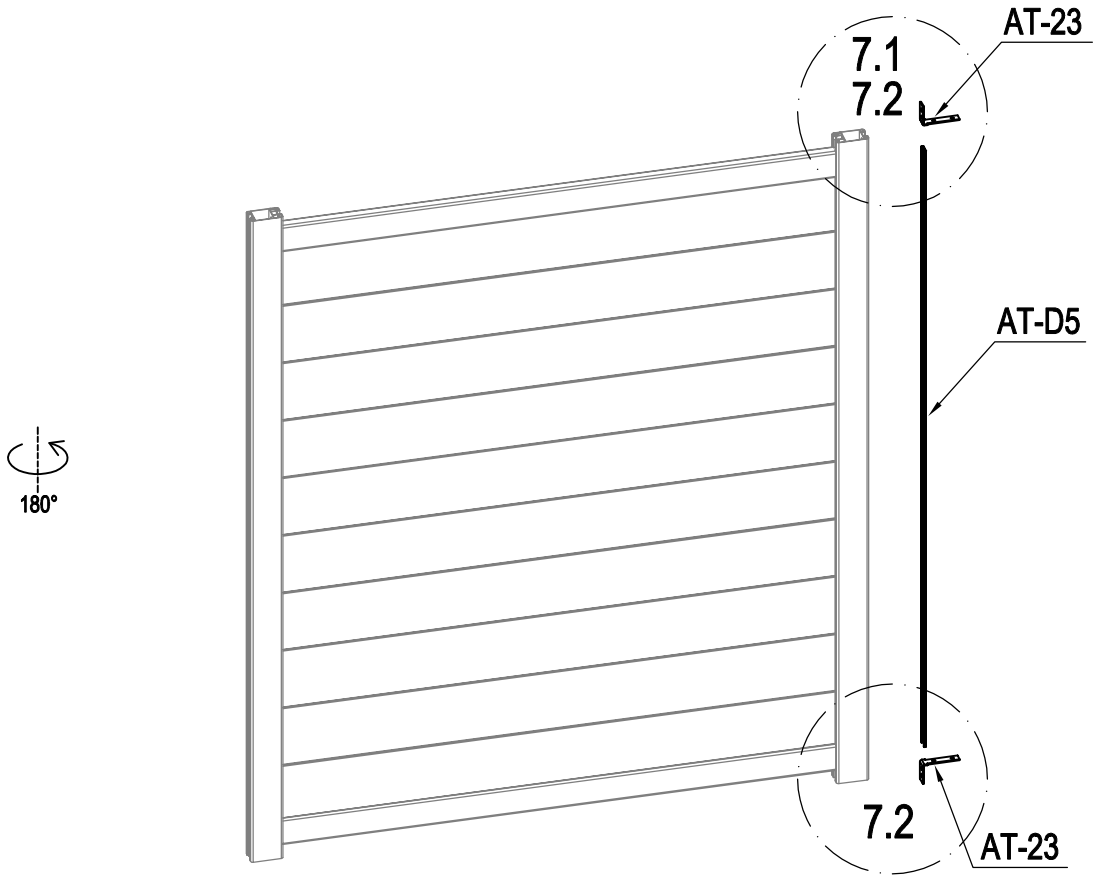


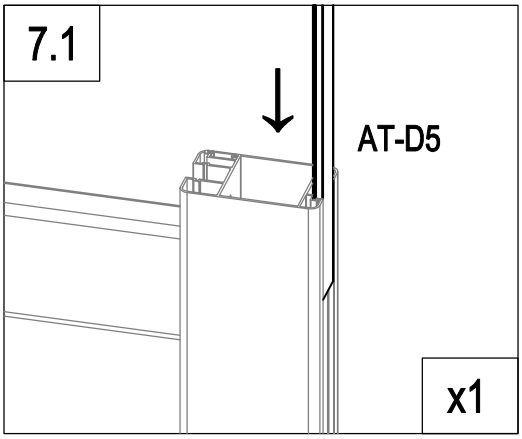


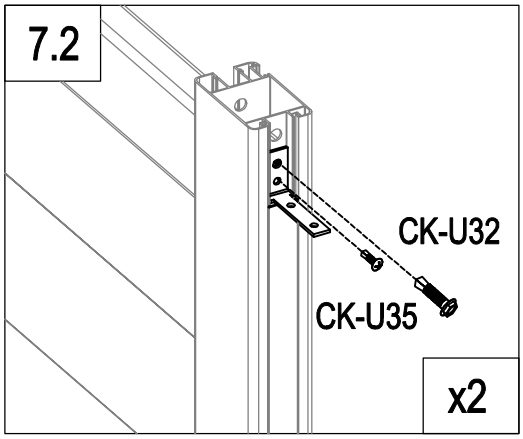


| | | |
|---|---|---|
| | AT-D5 | 1 |
| | AT-23 | 2 |
| | CK-U32 | 2 |
| | CK-U35 | 2 |

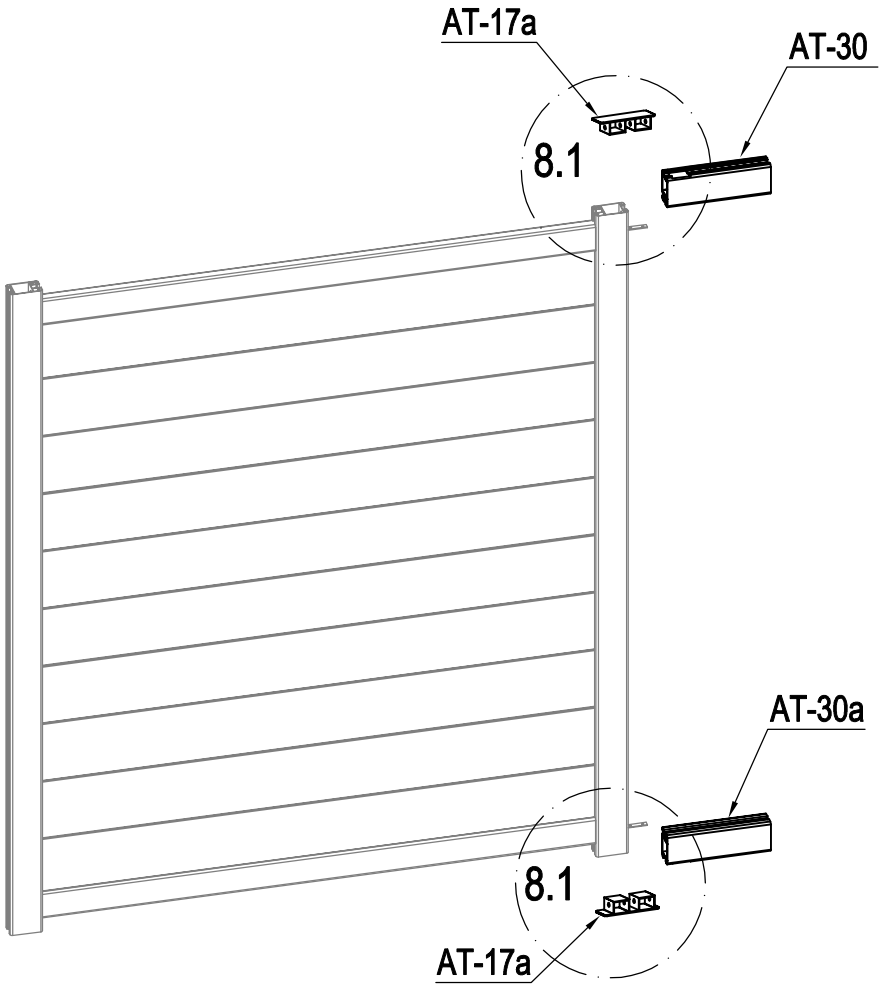


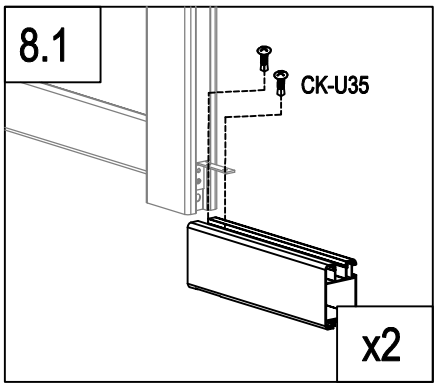


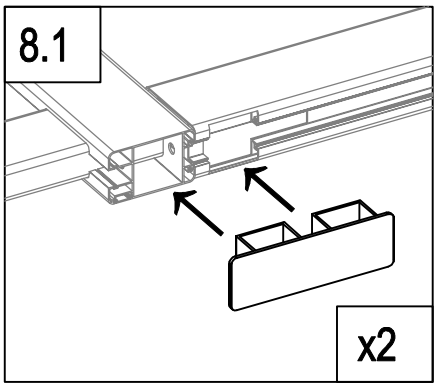


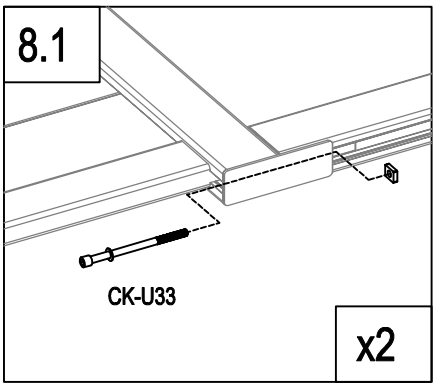


| | | |
|---|---|---|
| | AT-30 | 1 |
| | AT-30a | 1 |
| | AT-17a | 2 |

| | | |
|---|---|---|
| | CK-U33 | 2 |
| | CK-U35 | 4 |

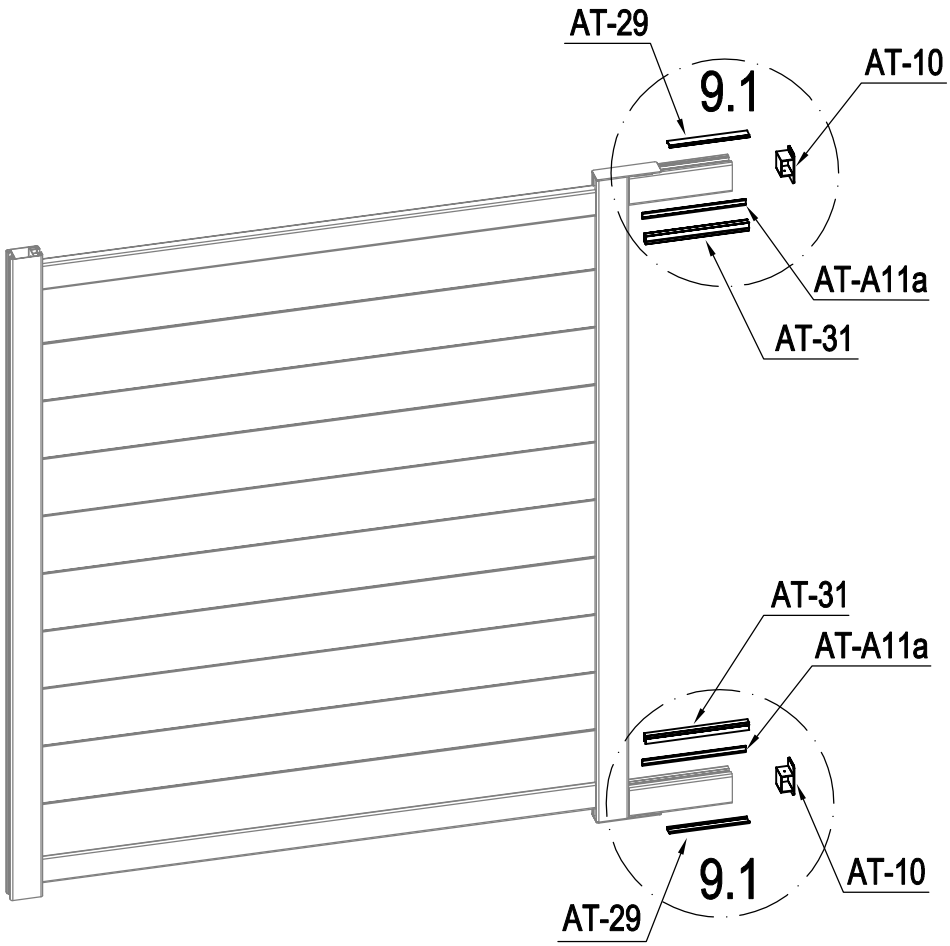


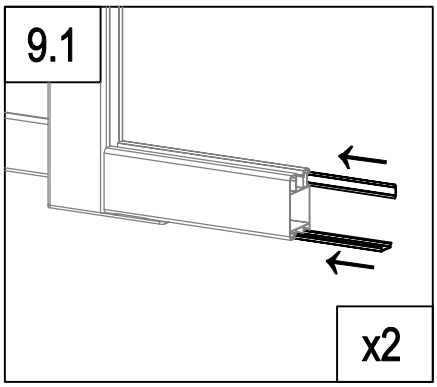


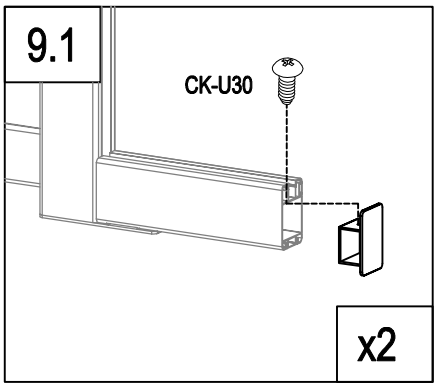


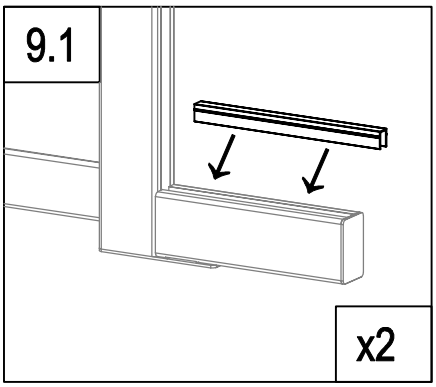


| | | |
|---|---|---|
| | AT-29 | 2 |
| | AT-A11a | 2 |
| | AT-31 | 2 |

| | | |
|---|---|---|
| | AT-10 | 2 |
| | CK-U30 | 2 |

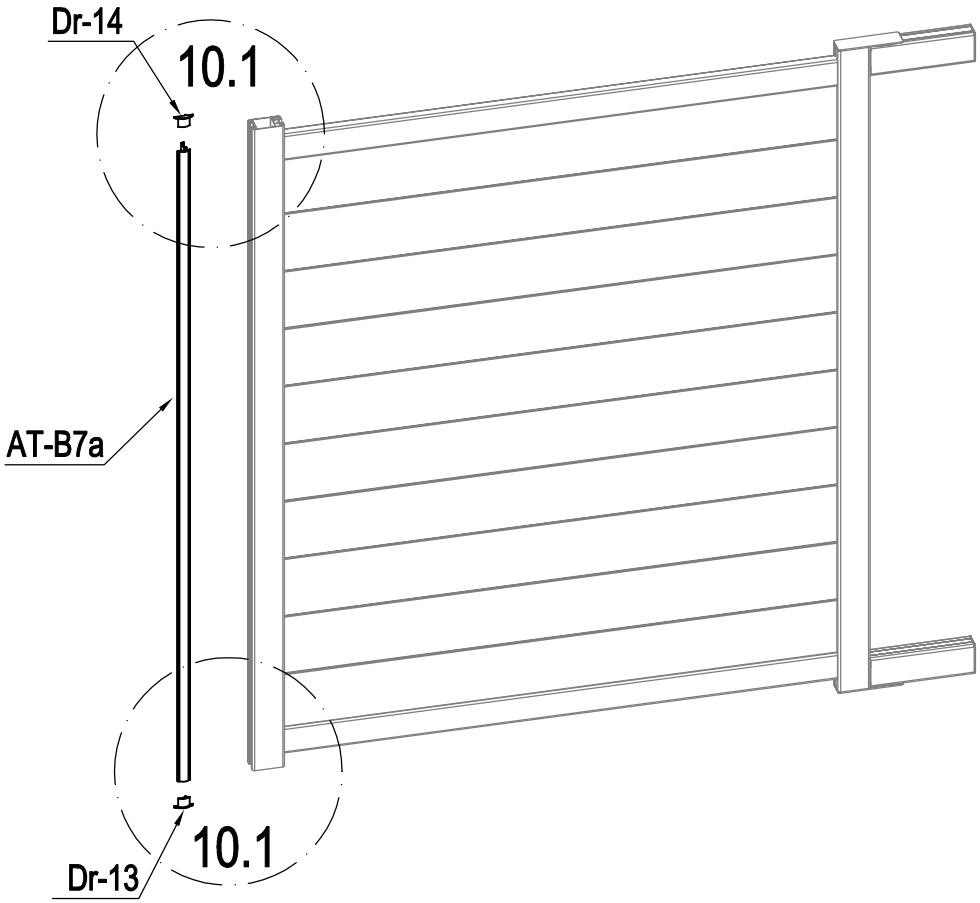


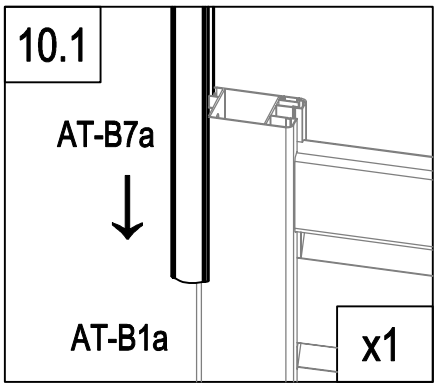


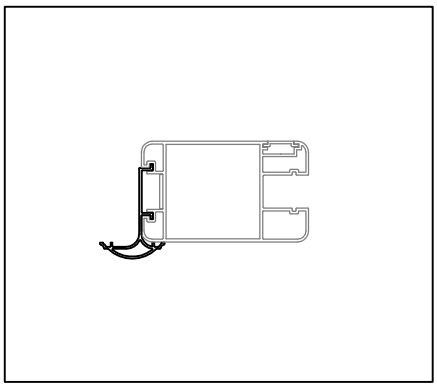

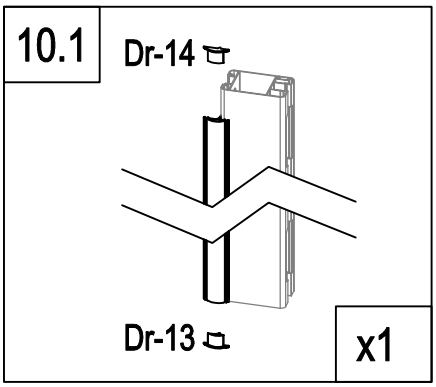


| | | |
|---|---|---|
| | AT-B7a | 1 |
| | Dr-13 | 1 |
| | Dr-14 | 1 |

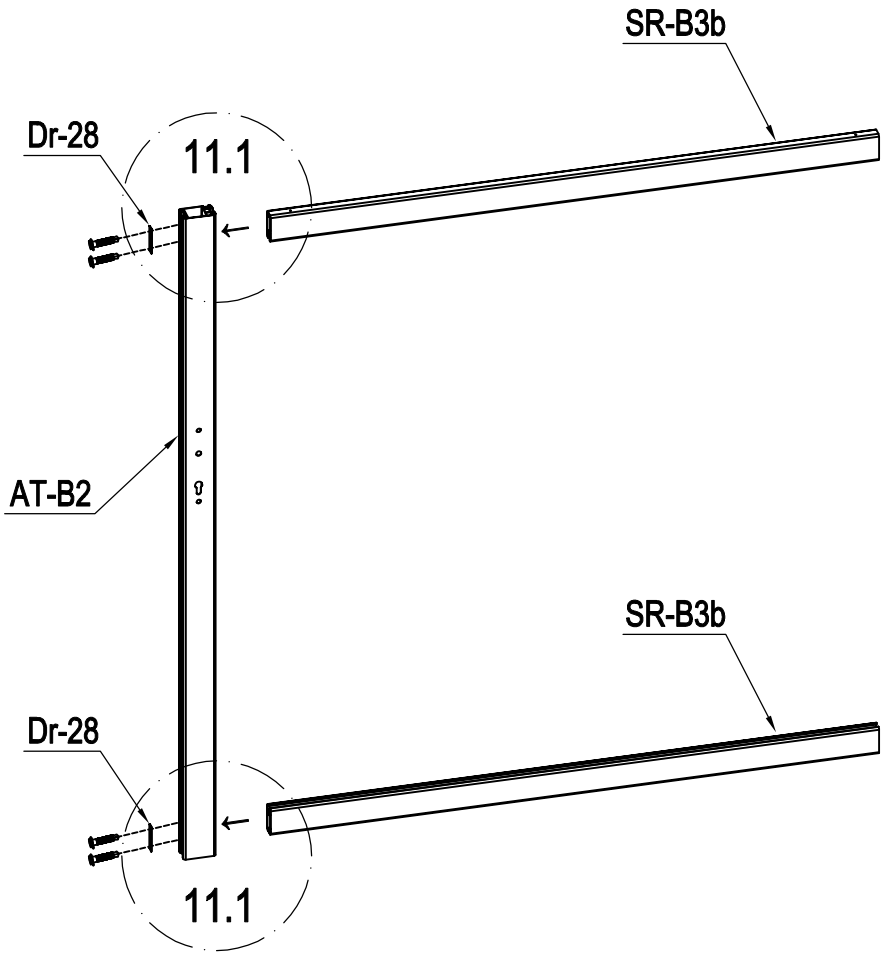


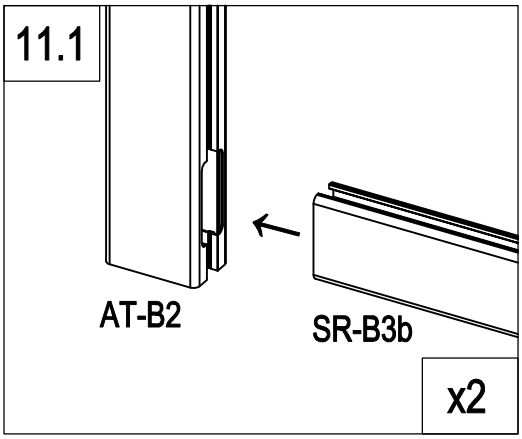


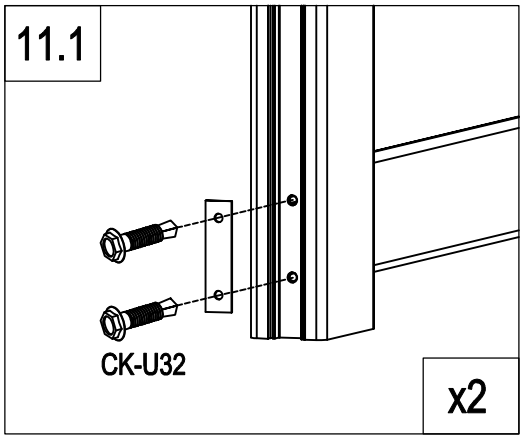


| | | |
|---|---|---|
| | AT-B2 | 1 |
| | SR-B3b | 2 |
| | Dr-28 | 2 |
| | CK-U32 | 4 |

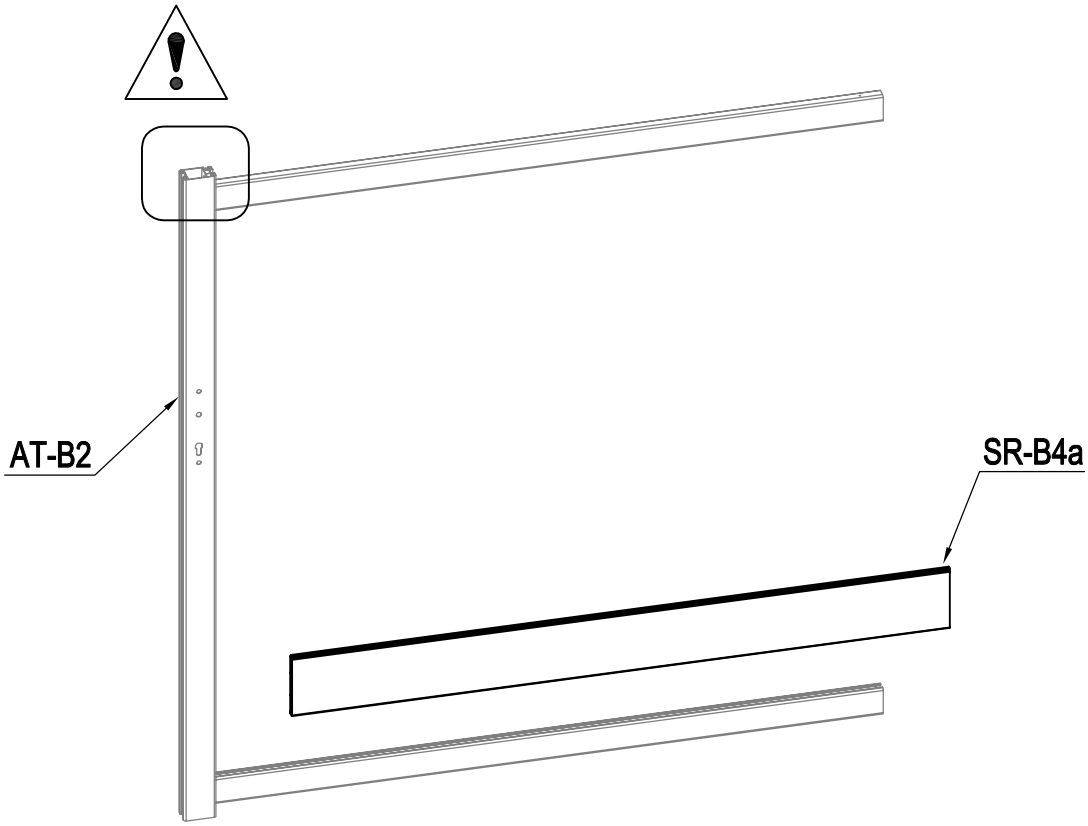


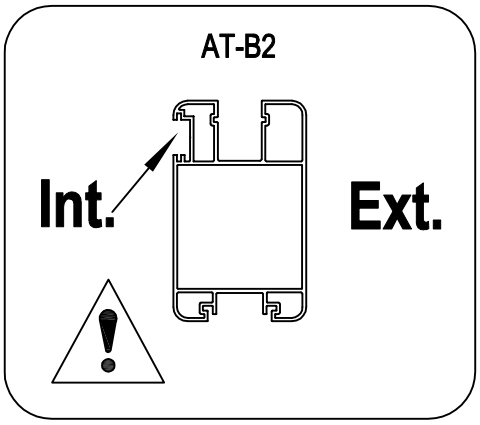


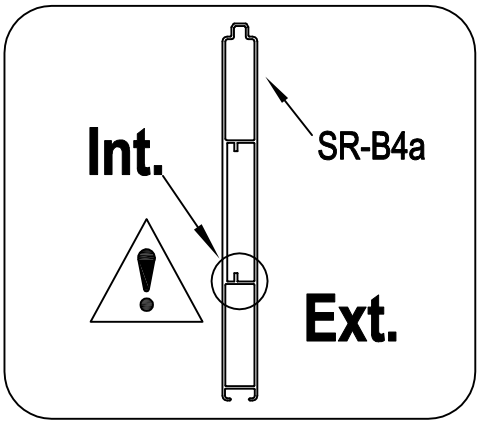


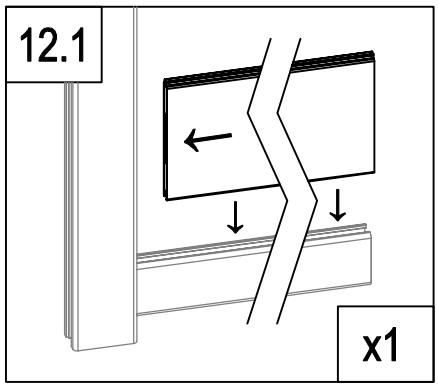


| | | |
|---|---|---|
| | SR-B4a | 1 |

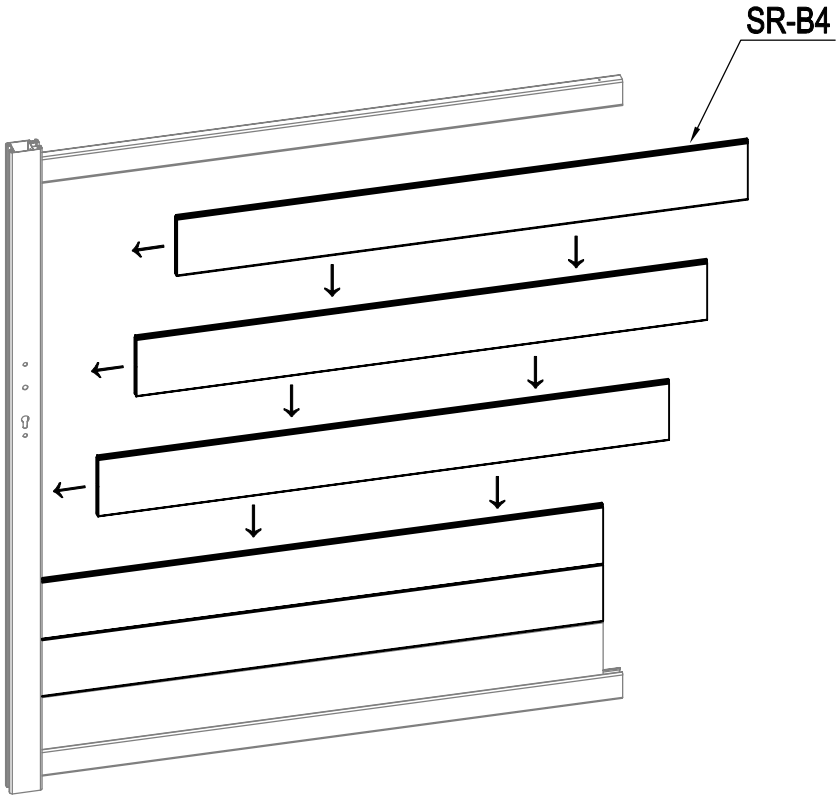


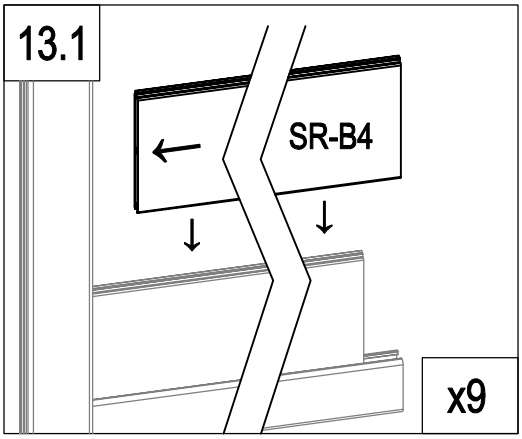


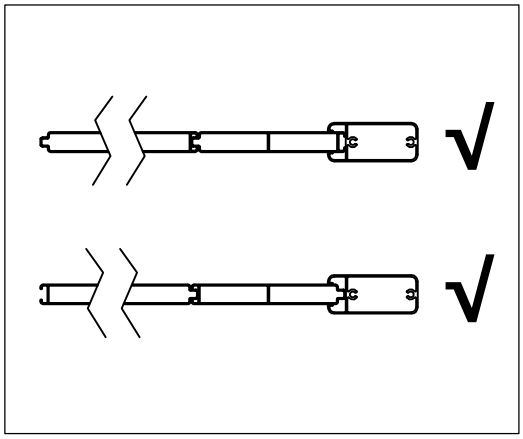

| | | |
|---|---|---|
| | SR-B4 | 9 |

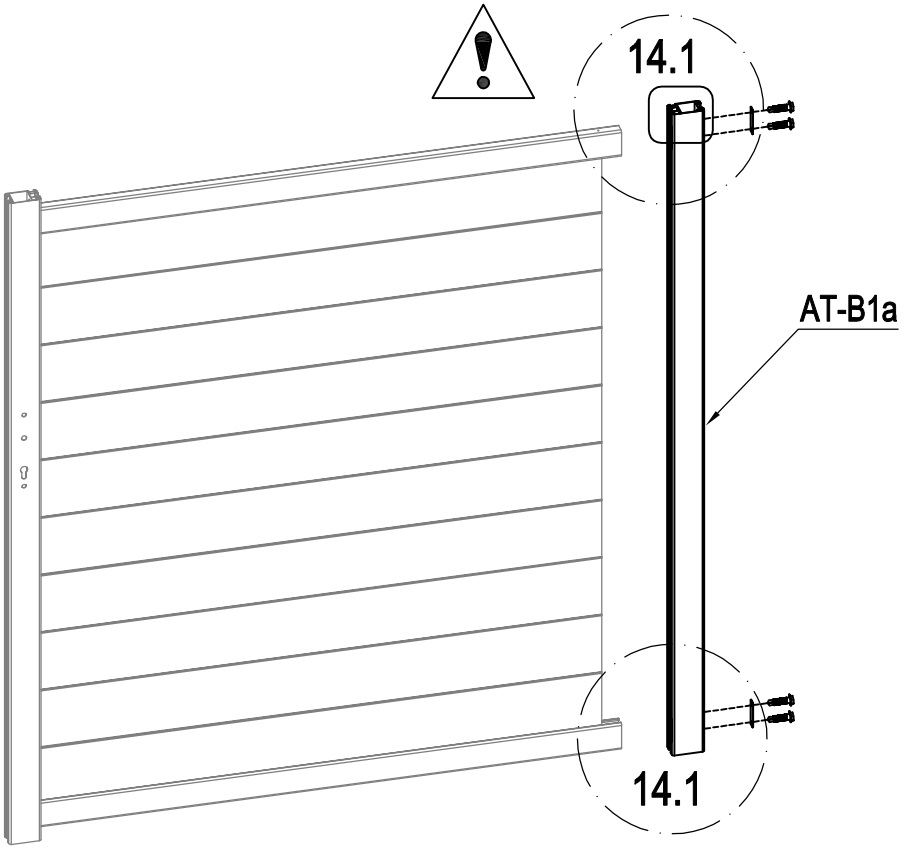


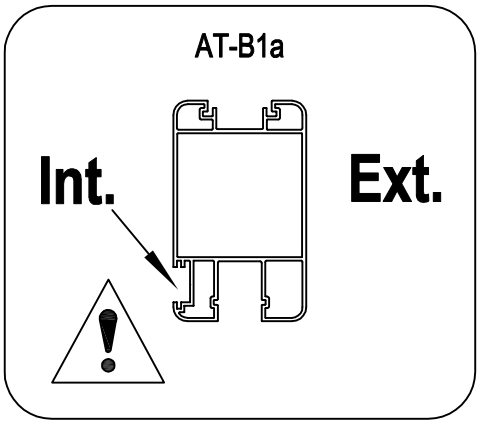


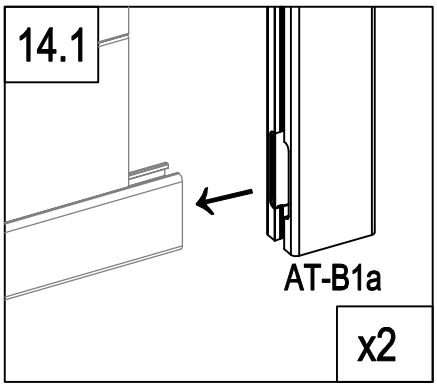


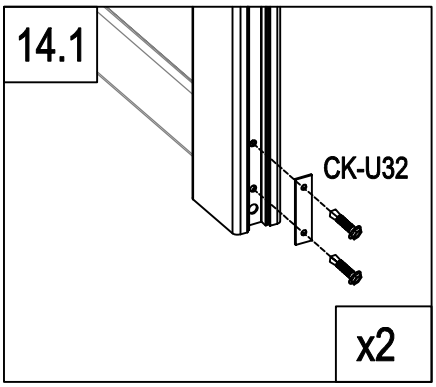


| | | |
|---|---|---|
| | AT-B1a | 1 |
| | Dr-28 | 2 |
| | CK-U32 | 4 |

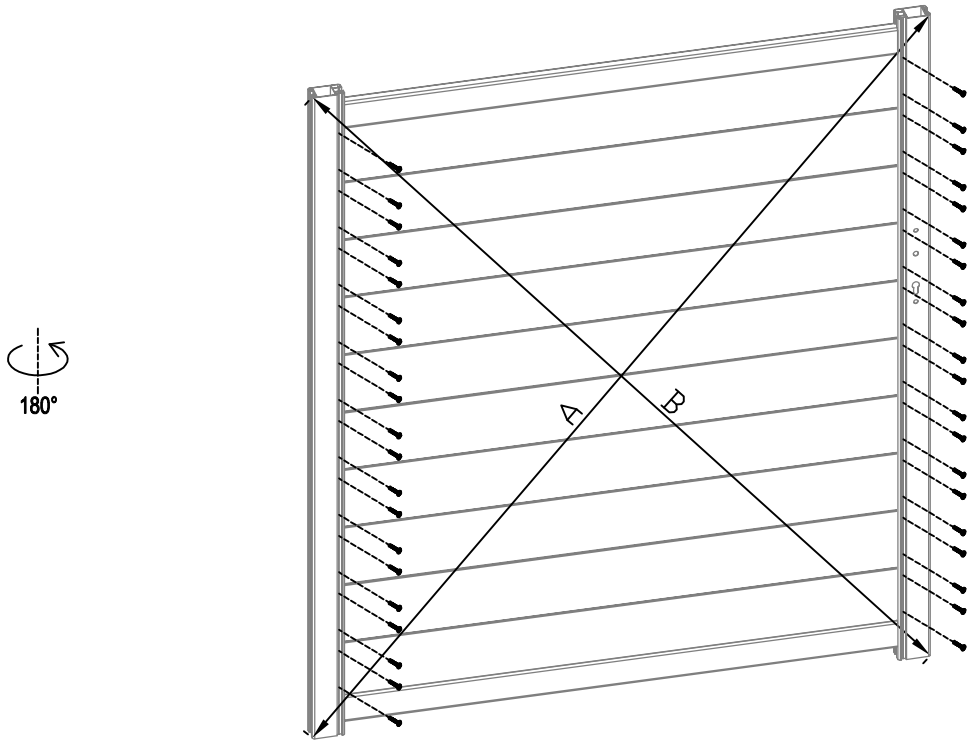


A=B

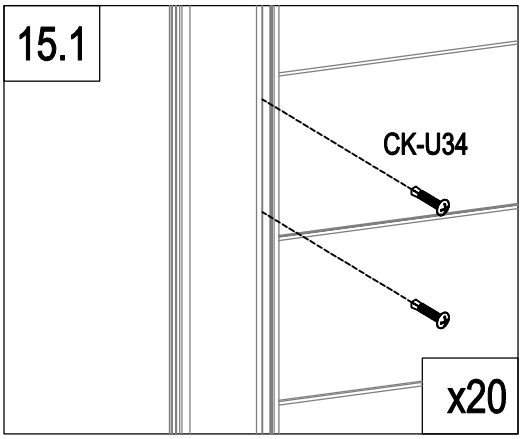


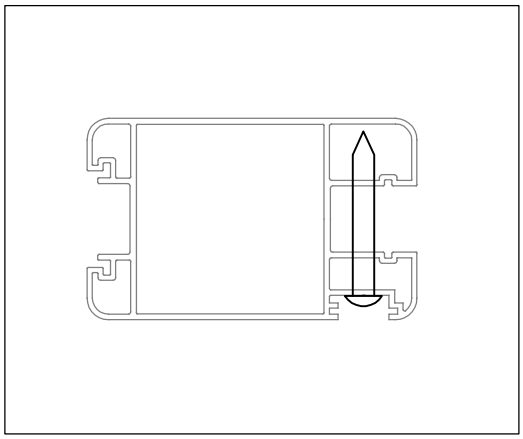

| | | |
|---|---|---|
| | CK-U34 | 40 |

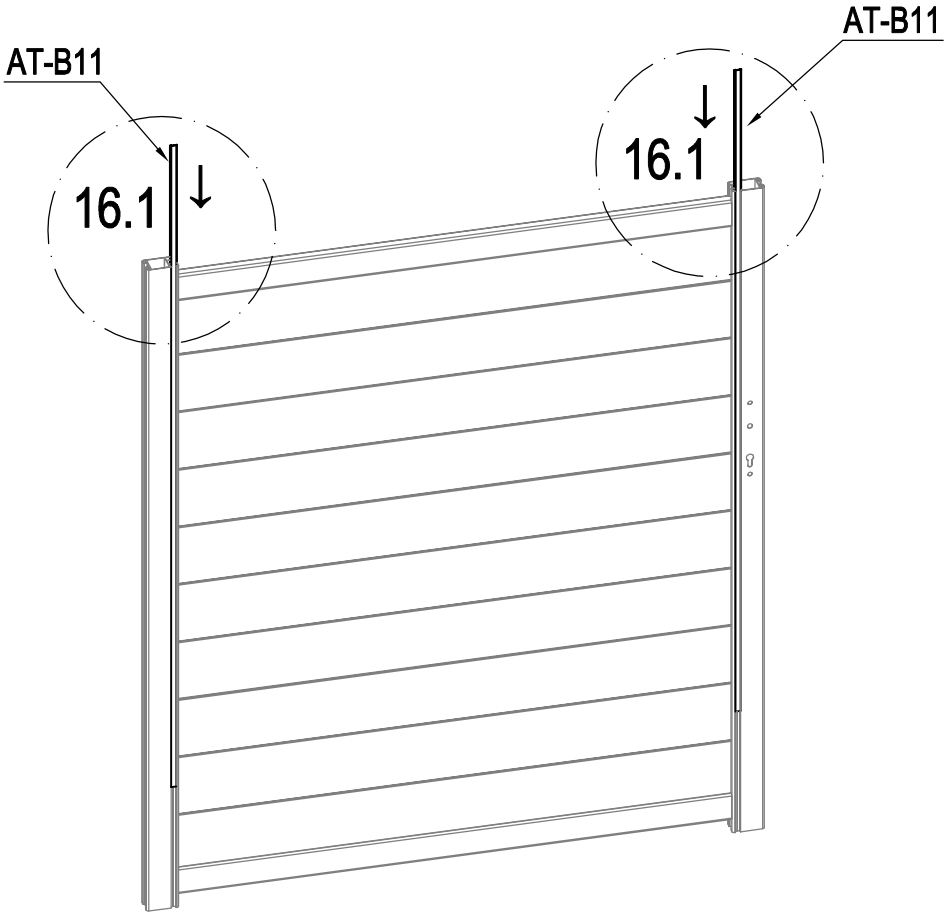


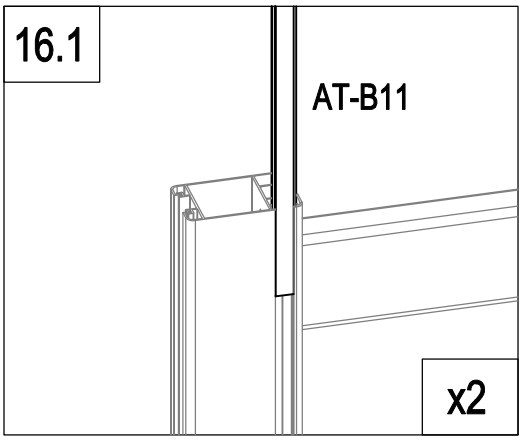


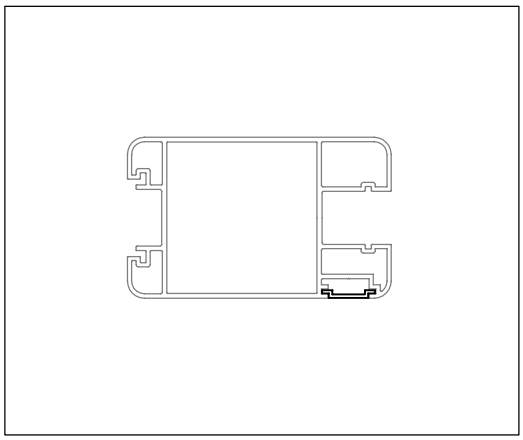

| | | |
|---|---|---|
| | AT-B11 | 2 |

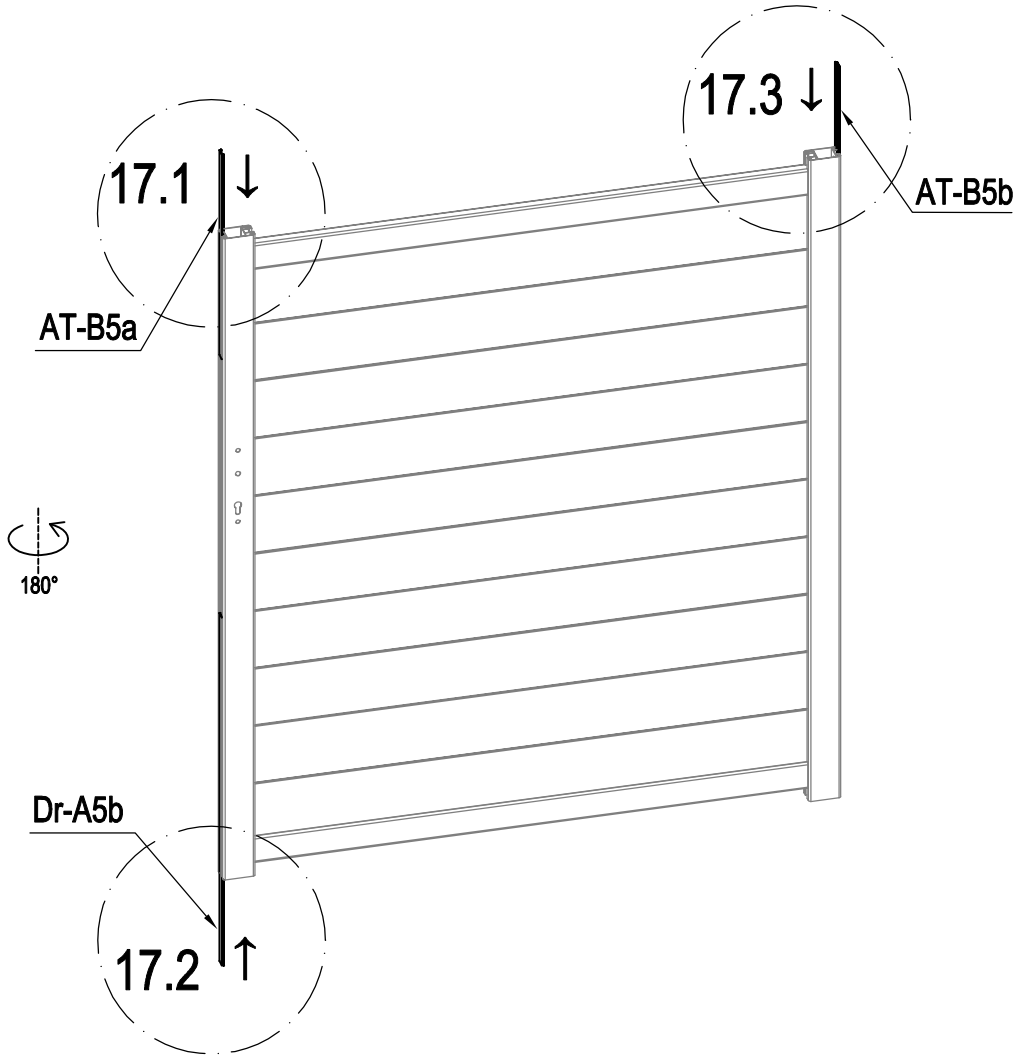


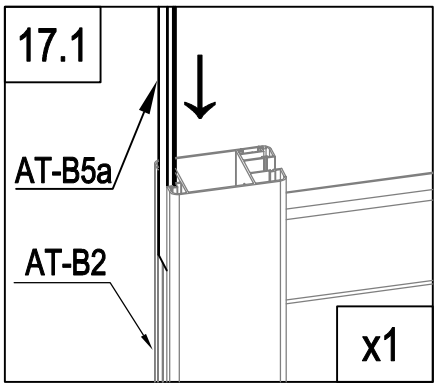


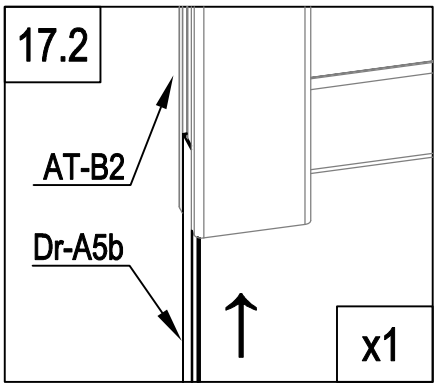


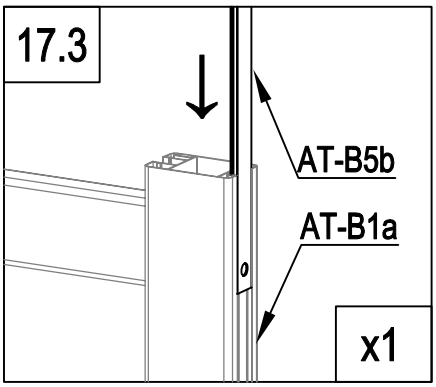


| | | |
|---|---|---|
| | AT-B5b | 1 |
| | AT-B5a | 1 |
| | Dr-A5b | 1 |

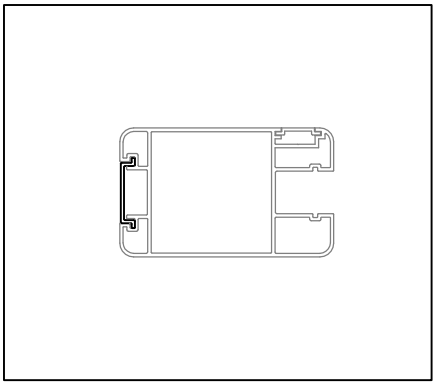

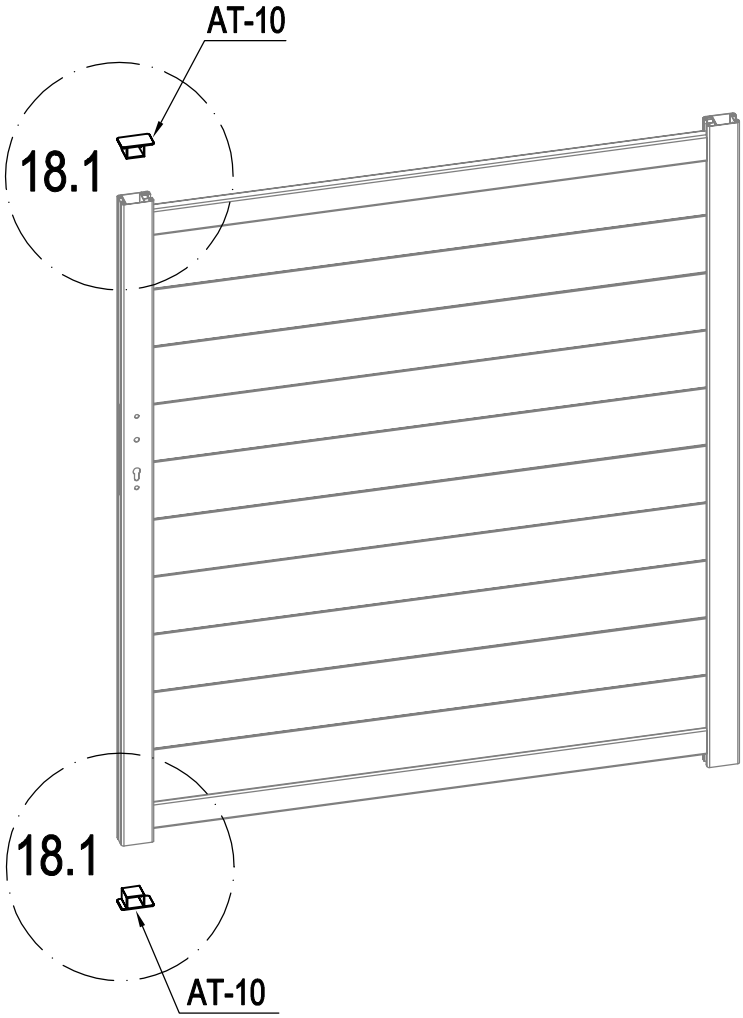


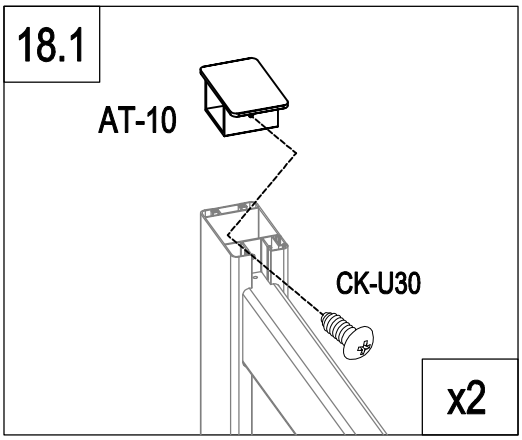


| | | |
|---|---|---|
| | AT-10 | 2 |
| | CK-U30 | 2 |

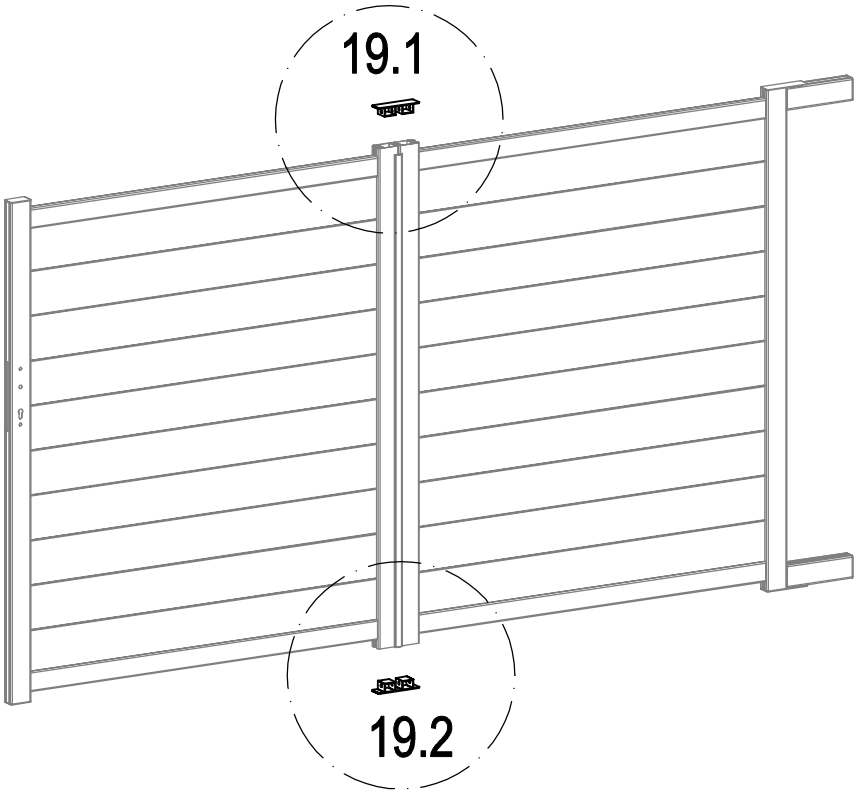


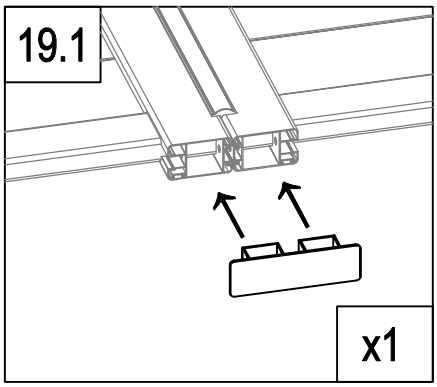


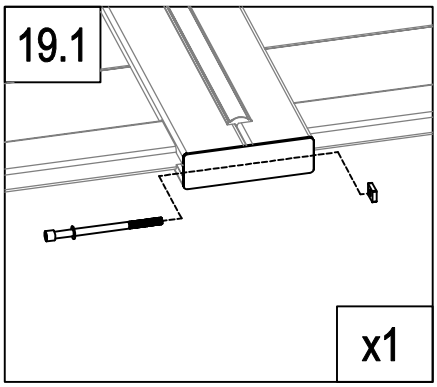


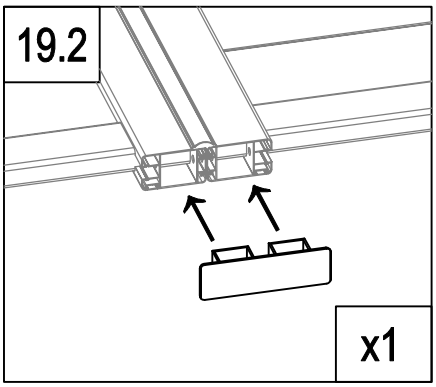


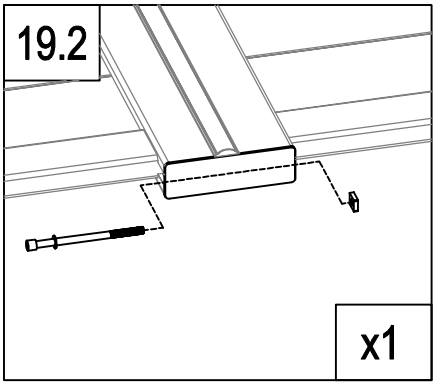


| | | |
|---|---|---|
| | AT-17 | 2 |
| | CK-U33 | 2 |

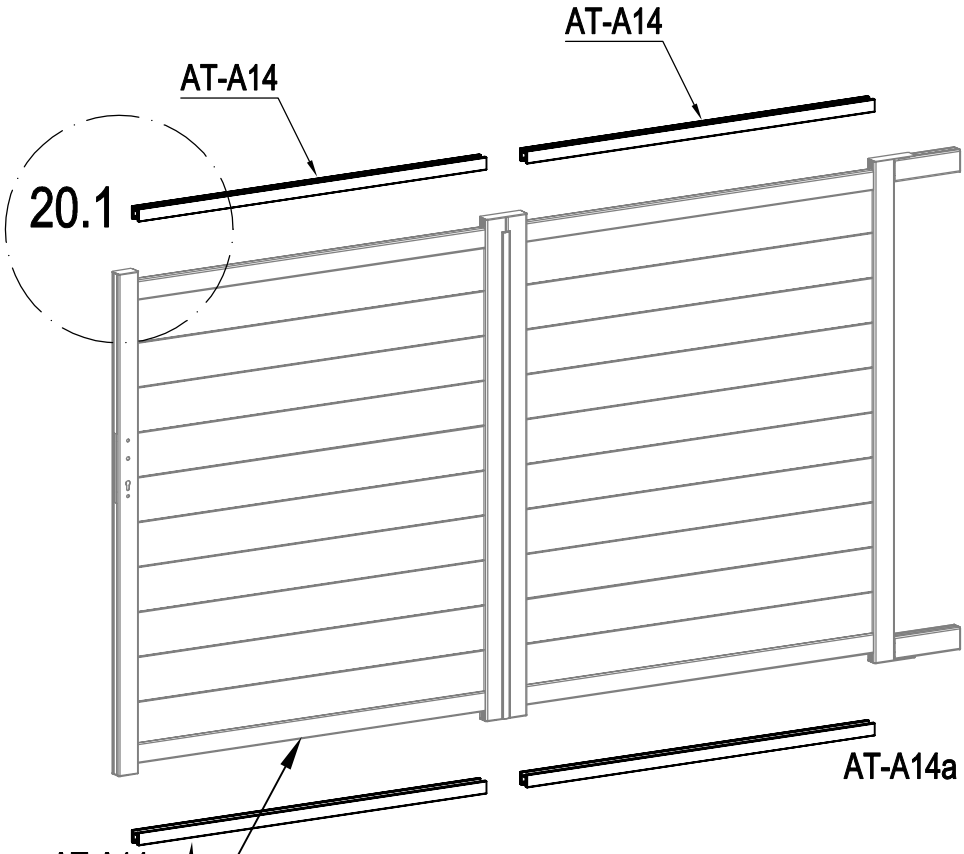


EN: These parts are made for connecting your gate's automation
FR: Ces pièces sont faites pour relier l'automatisation de votre portail
DE: Diese Teile sind für den Anschluss der Automatisierung Ihres Tores vorgesehen
ES: Estas piezas están hechas para conectar la automatización de su puerta
PT : Estas peças são feitas para ligar a automatização do seu portão
IT: Queste parti sono realizzate per collegare l'automazione del vostro cancello
NL: Deze onderdelen zijn gemaakt voor het aansluiten van de automatisering van uw poort.
PL: Te części są wykonane do podłączenia automatyki bramy.

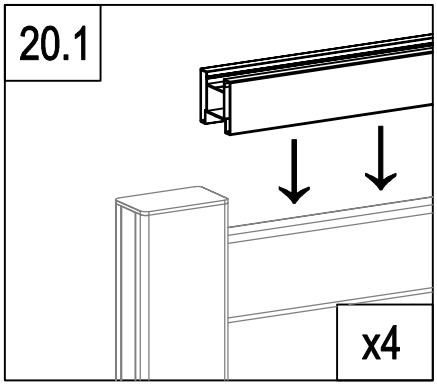


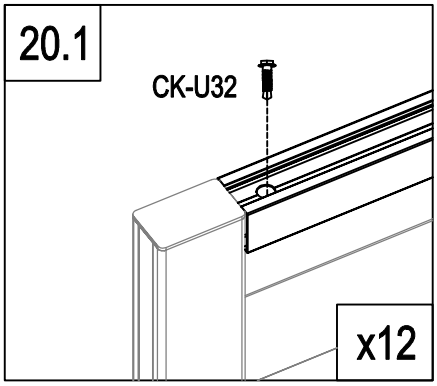


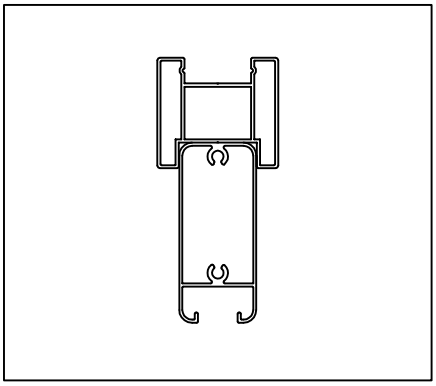

| | | |
|---|---|---|
| | AT-A14 | 2 |
| | AT-A14a | 2 |
| | CK-U32 | 12 |

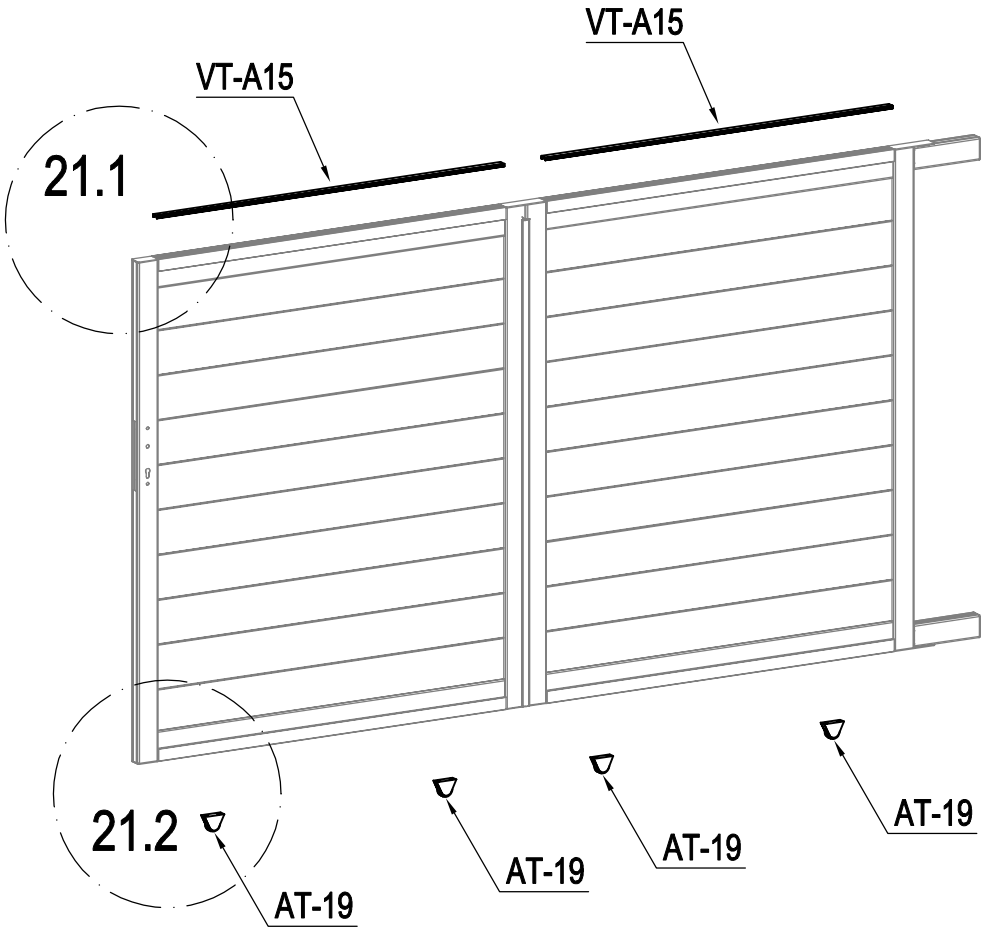


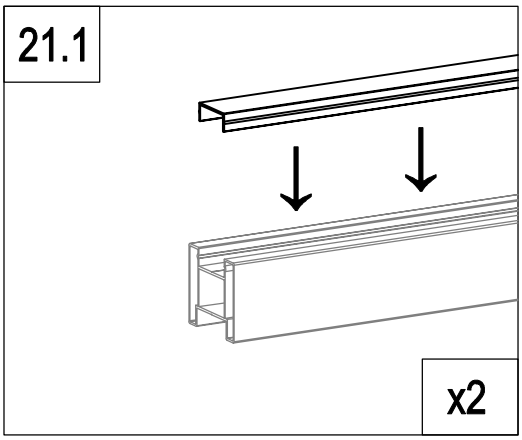


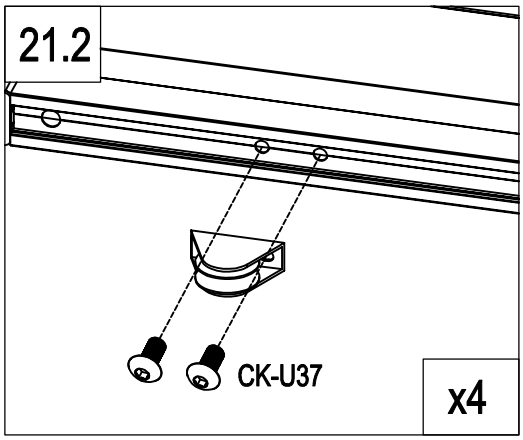


| | | |
|---|---|---|
| | VT-A15 | 2 |
| | AT-19 | 4 |
| | CK-U37 | 8 |

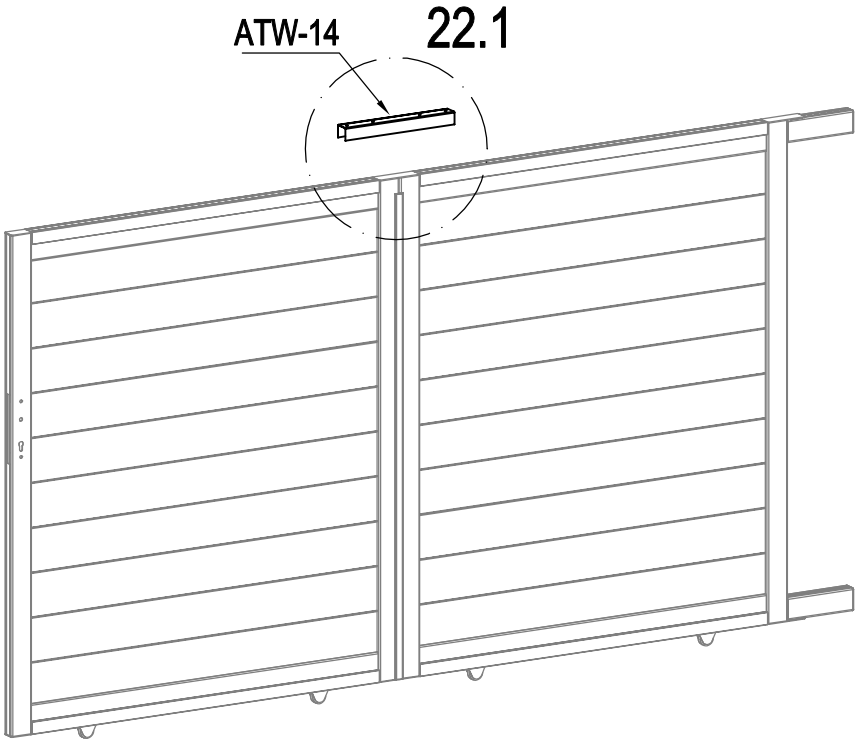


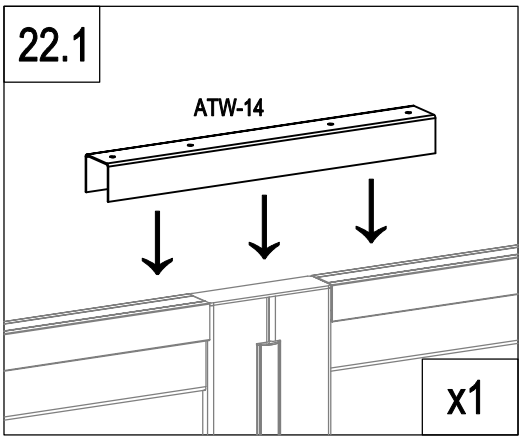


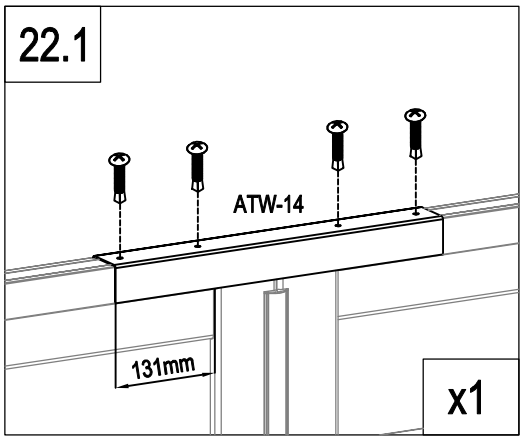


| | | |
|---|---|---|
| | ATW-14 | 1 |
| | CK-U34 | 4 |

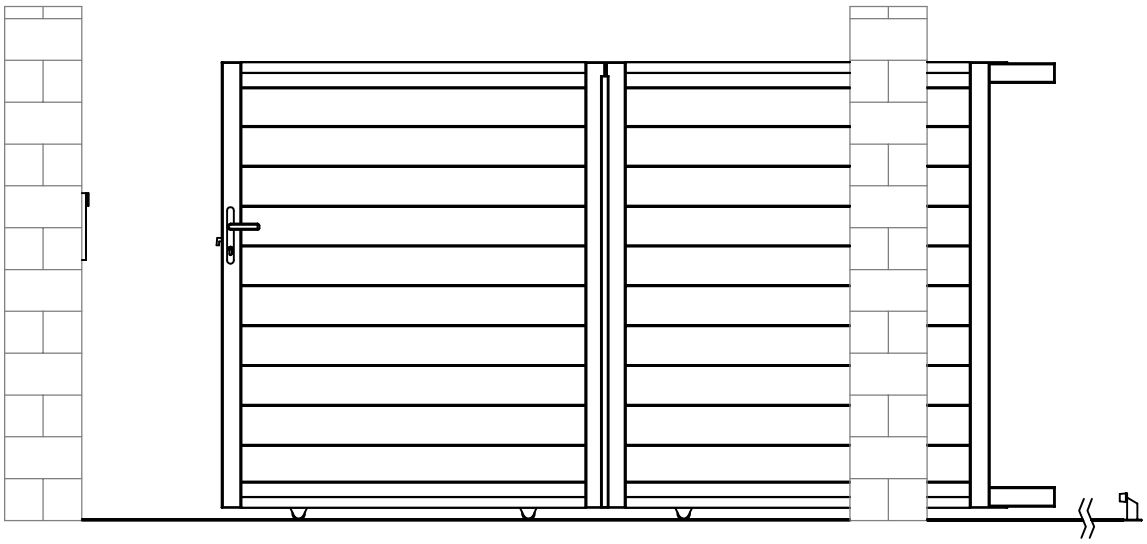

L : P23~28

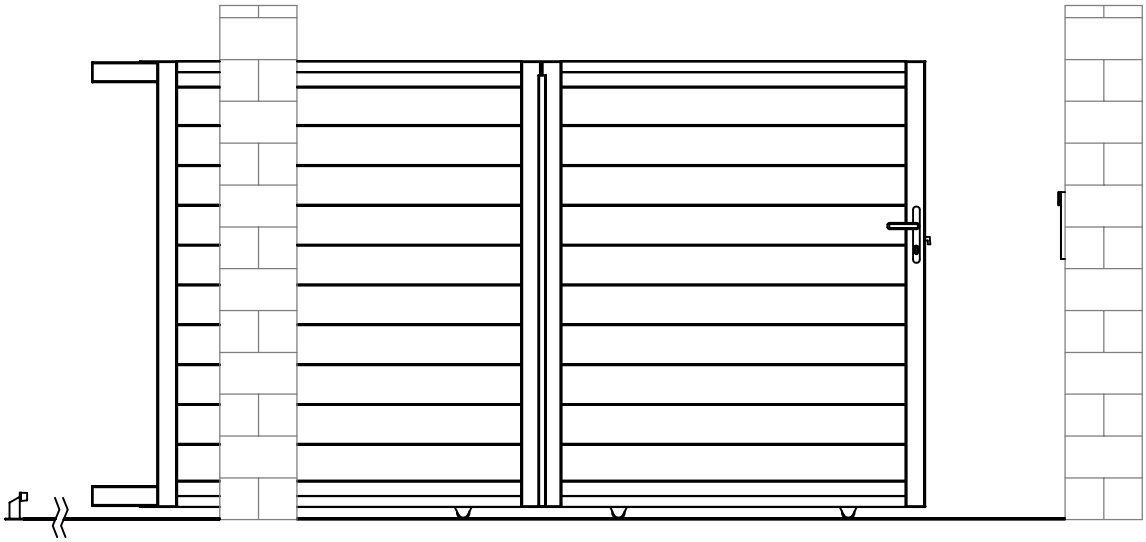

R : P29~34

L

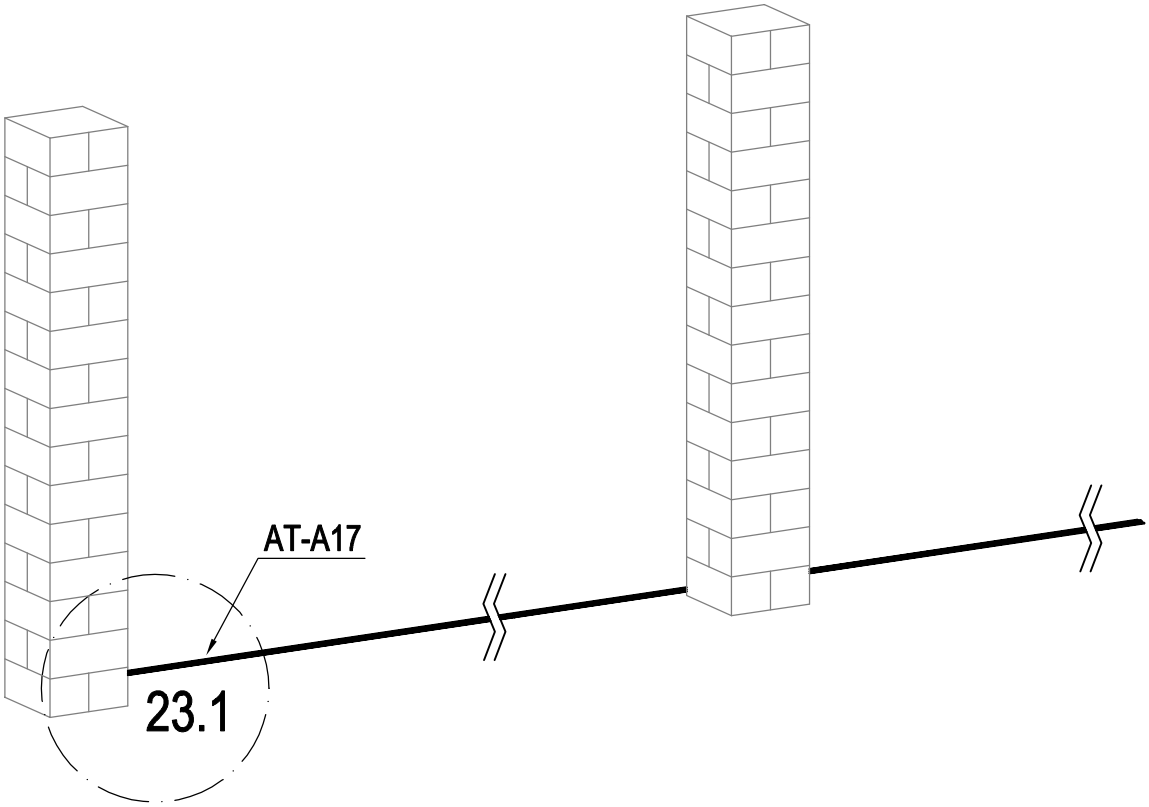


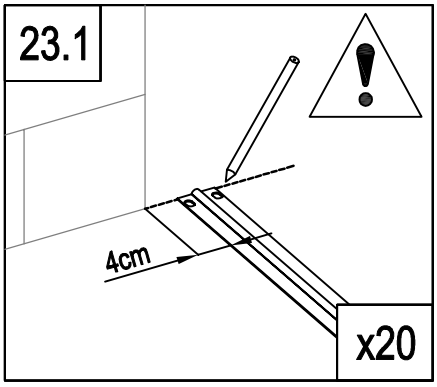


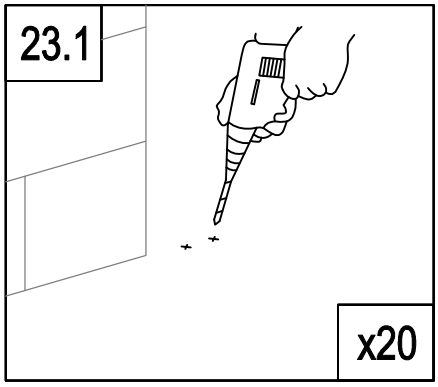


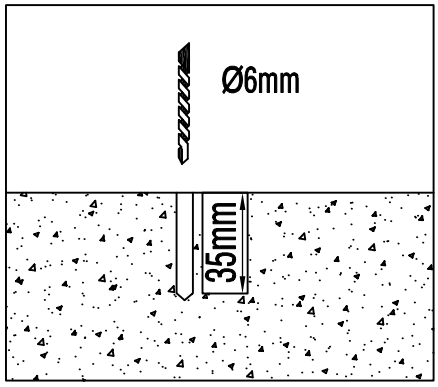


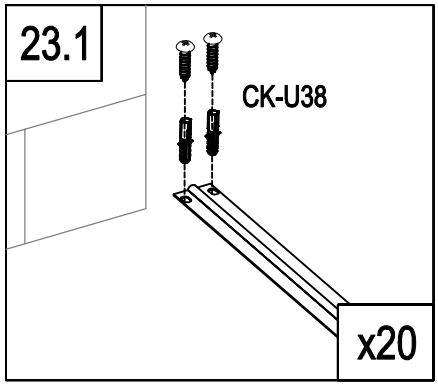


| | | |
|---|---|---|
| | AT-A17 | 5 |
| | CK-U38 | 40 |

L

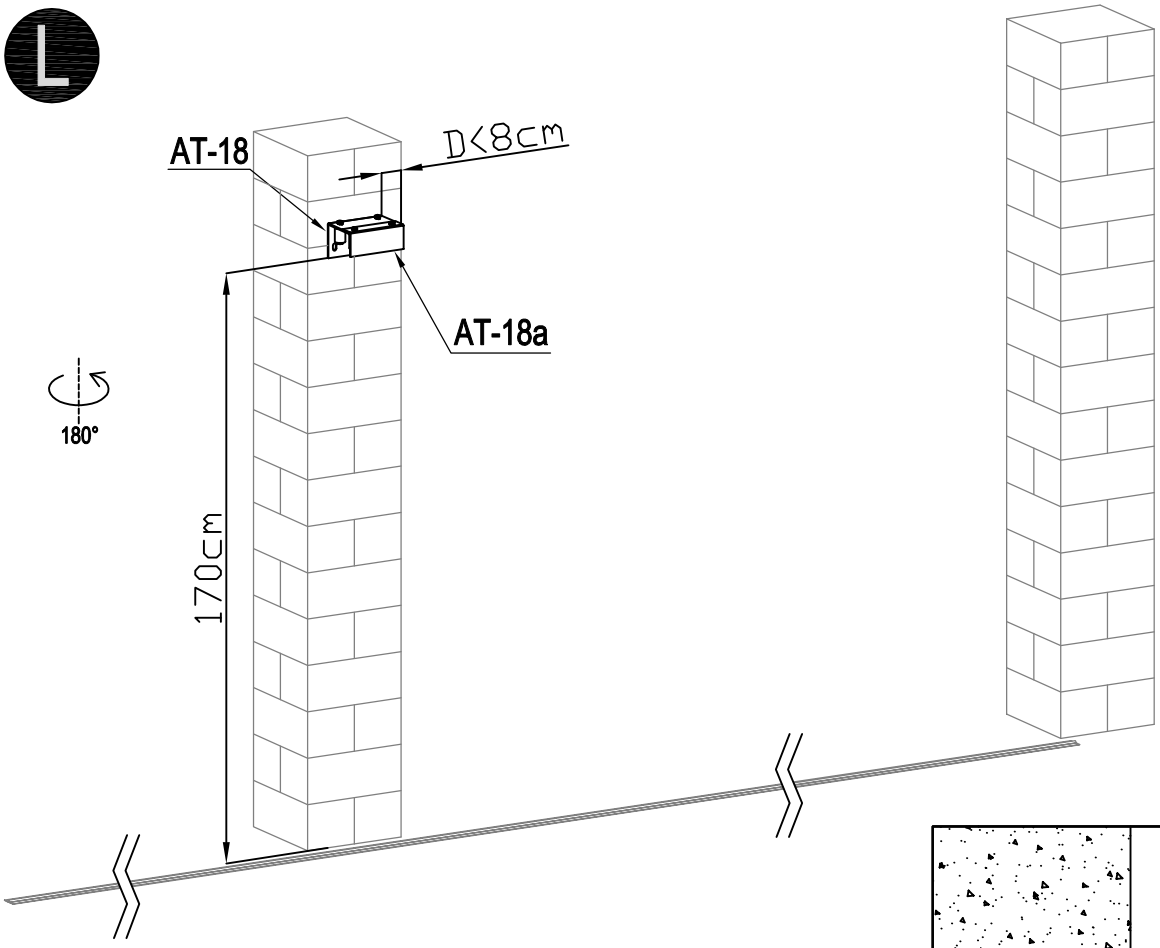


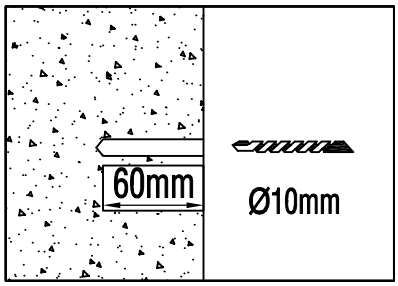


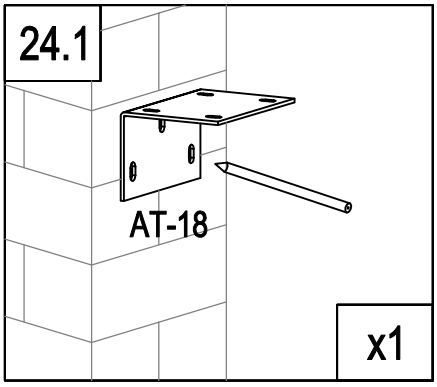


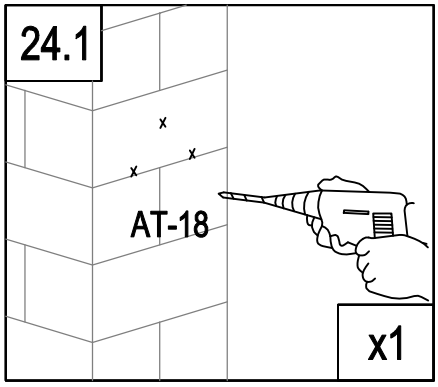


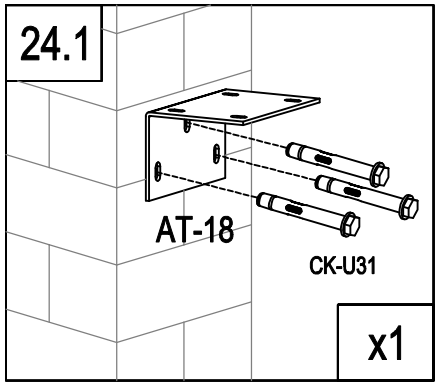


| | | |
|---|---|---|
| | AT-18 | 1 |
| | AT-18a | 1 |
| | AT-20 | 4 |
| | CK-U31 | 3 |

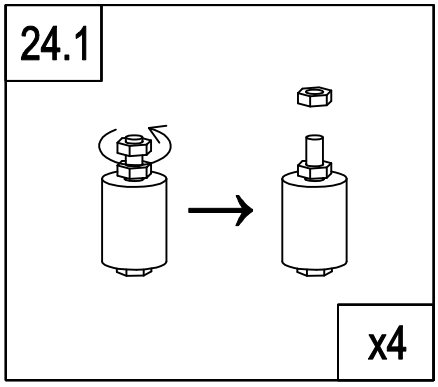


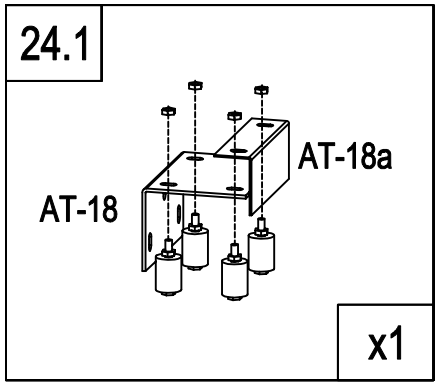

L

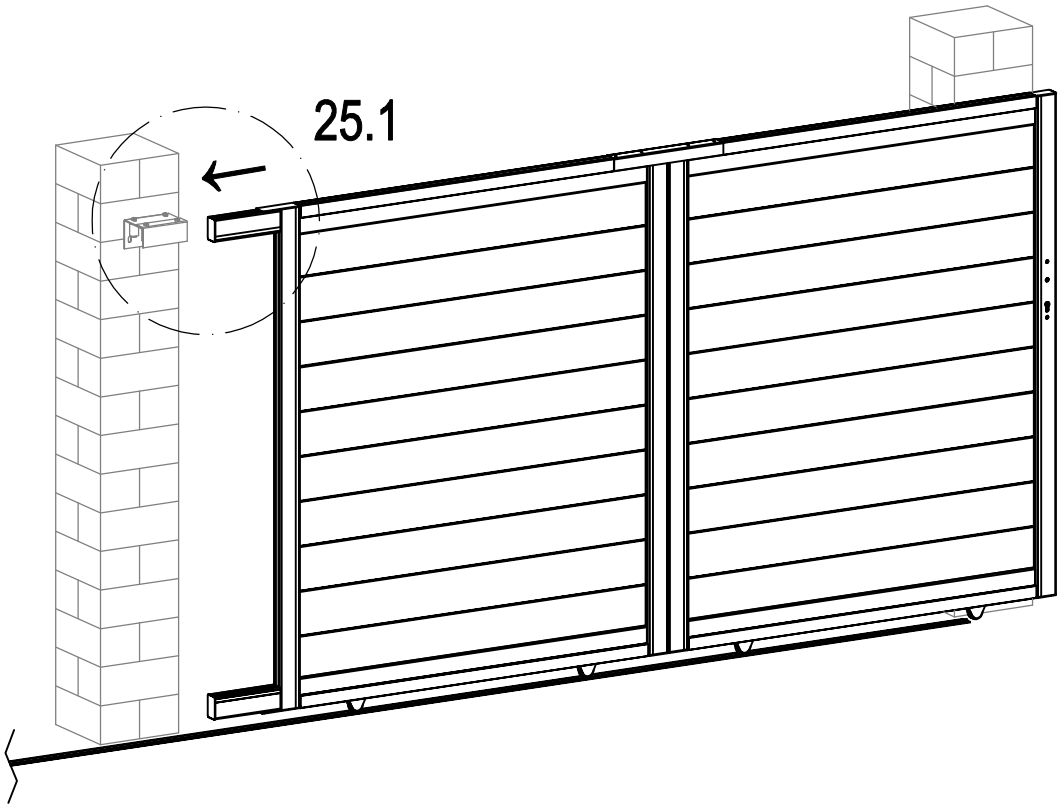


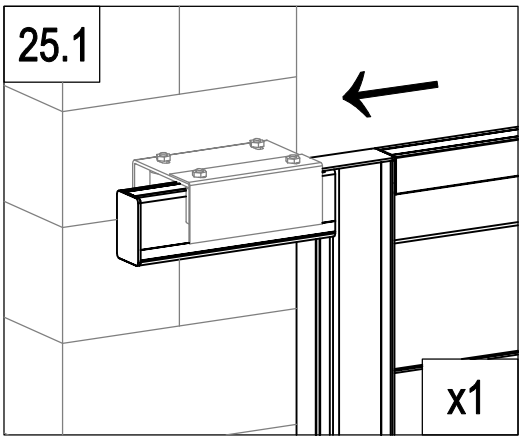

L

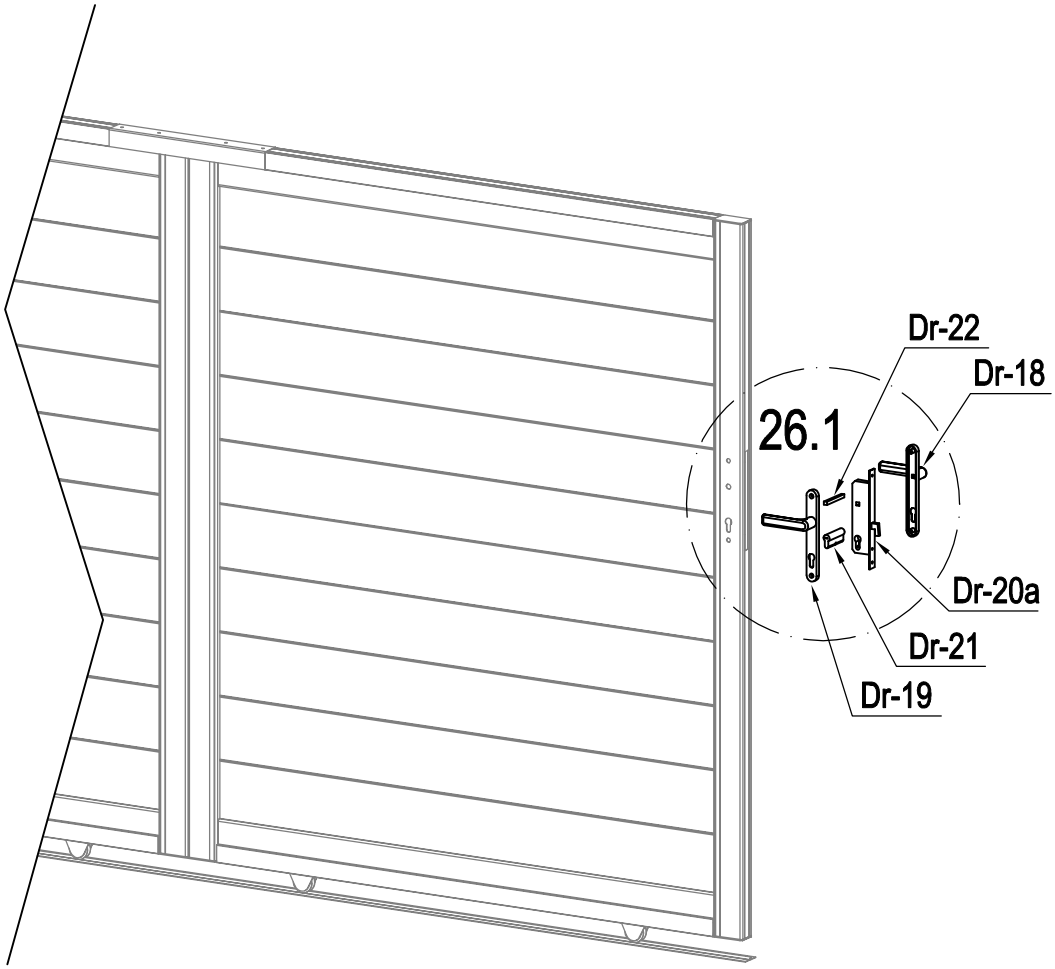


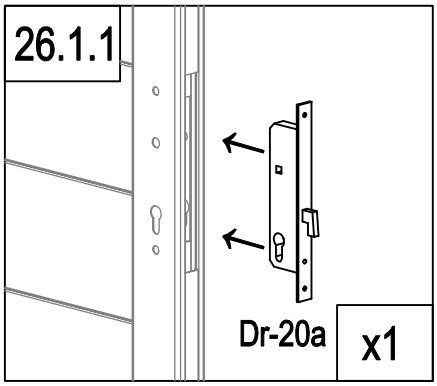


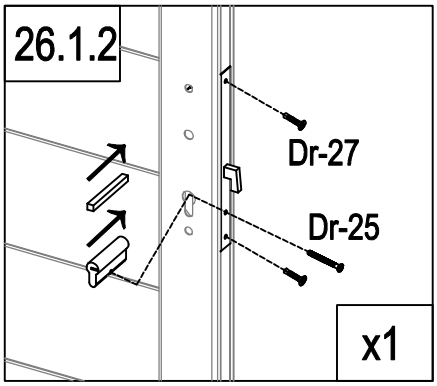


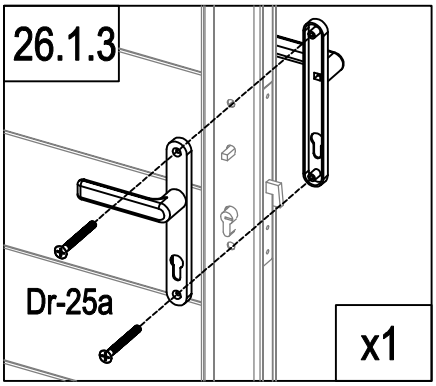


| | | |
|---|---|---|
| | Dr-20a | 1 |
| | Dr-21 | 1 |
| | Dr-22 | 1 |
| | Dr-25 | 1 |

| | | |
|---|---|---|
| | Dr-18 | 1 |
| | Dr-19 | 1 |
| | Dr-25a | 2 |
| | Dr-27 | 2 |

L

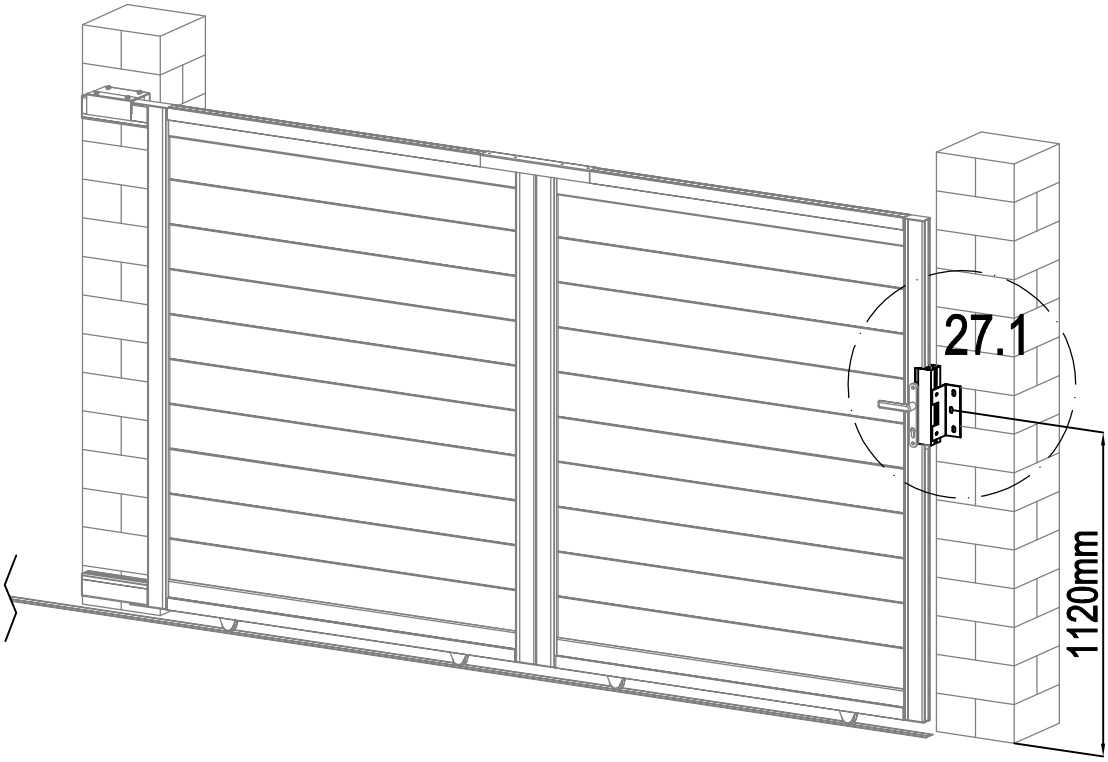


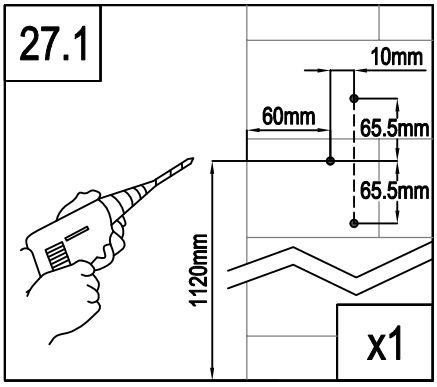


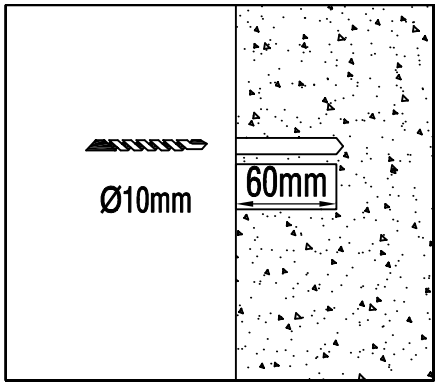


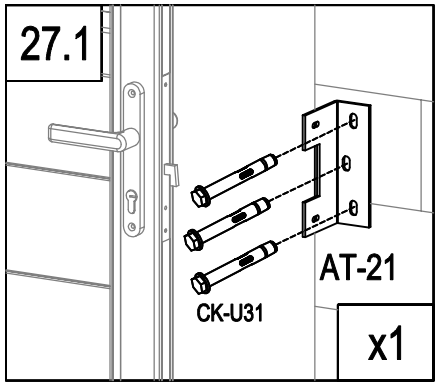


| | | |
|---|---|---|
| | AT-16 | 1 |
| | AT-21 | 1 |
| | CK-U36 | 2 |
| | CK-U31 | 3 |
| | AT-22J | 3 |

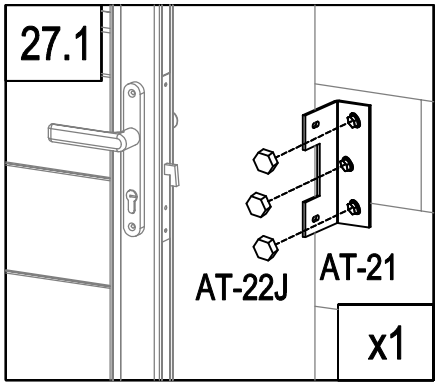


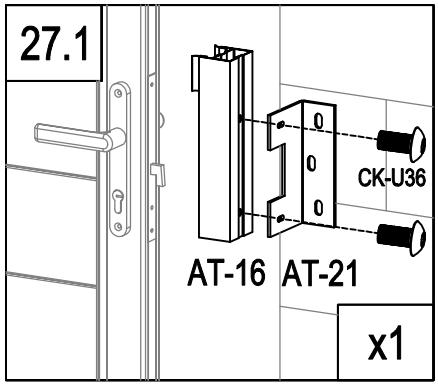

L

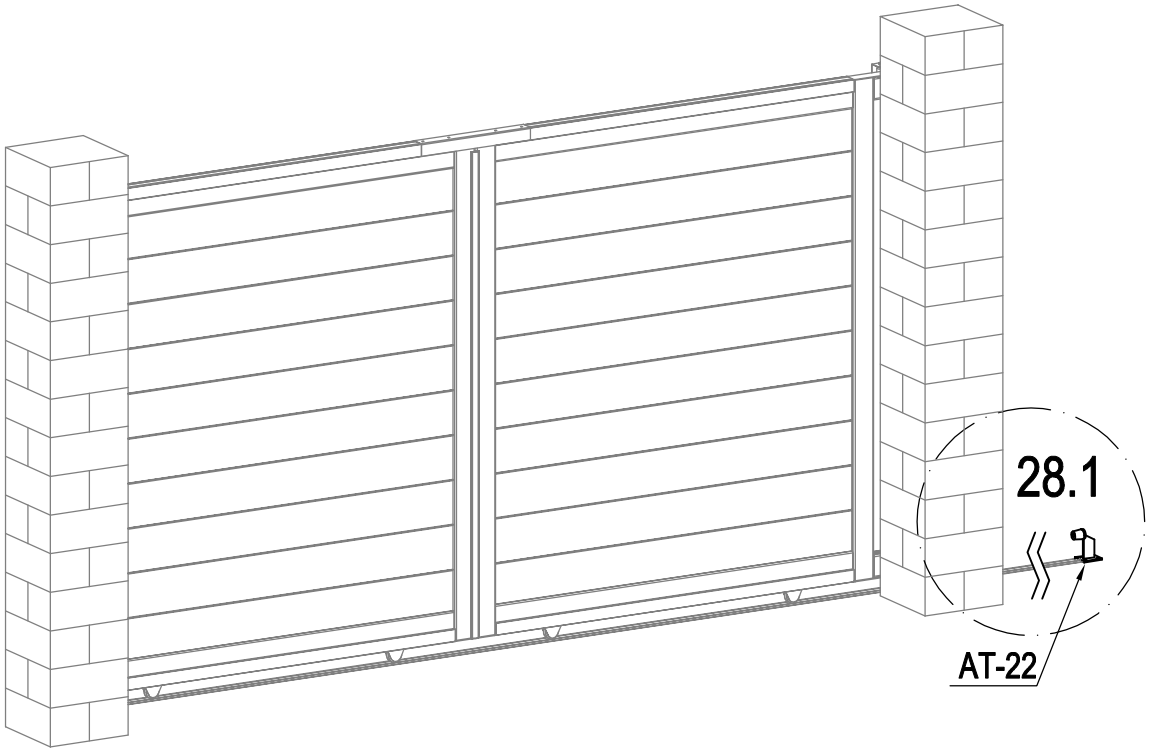


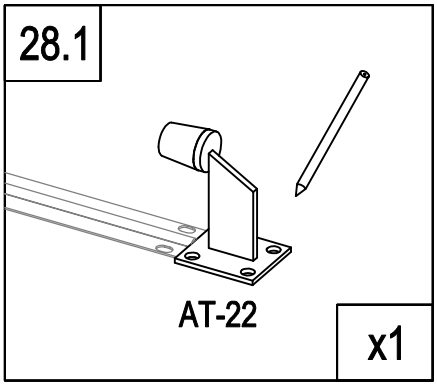


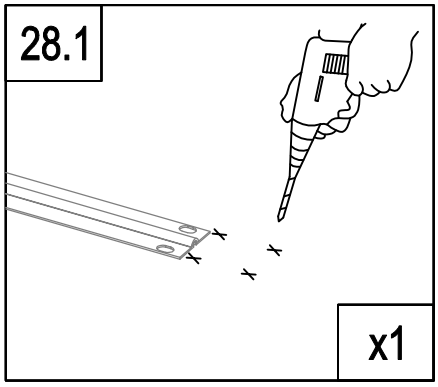


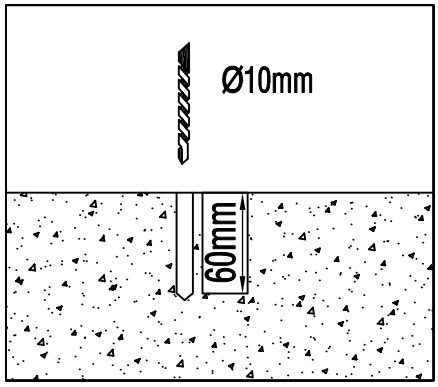


| | | |
|---|---|---|
| | AT-22 | 1 |
| | CK-U31 | 4 |
| | AT-22J | 4 |

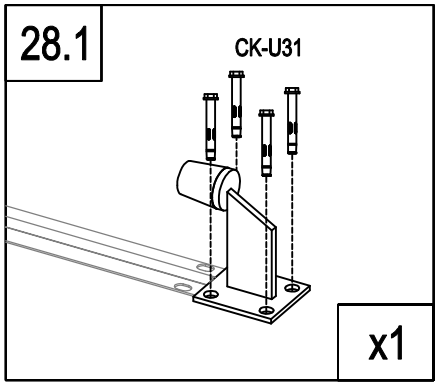


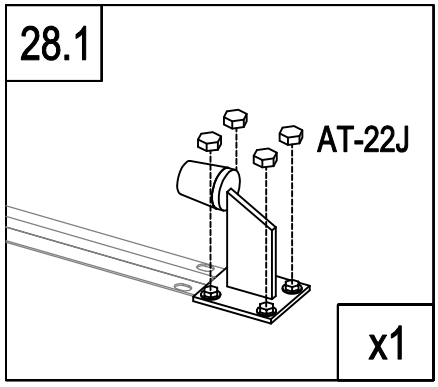

R

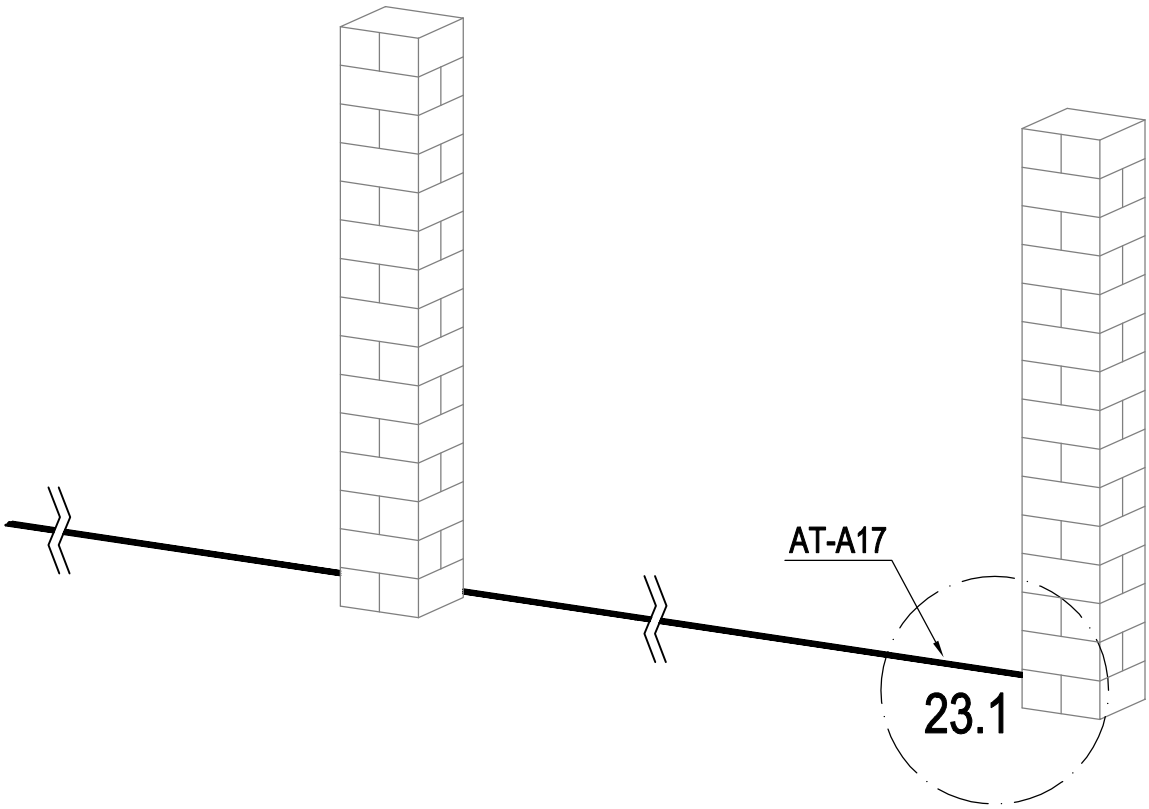


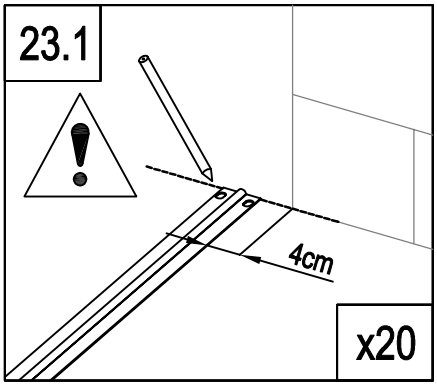


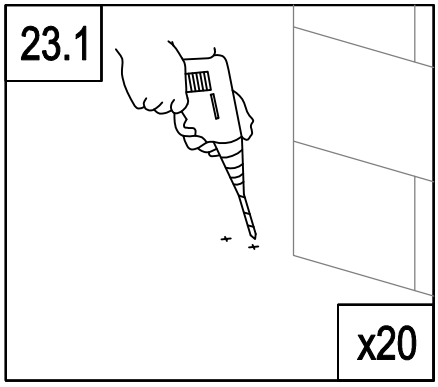


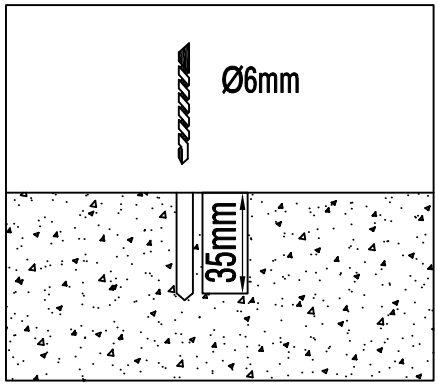


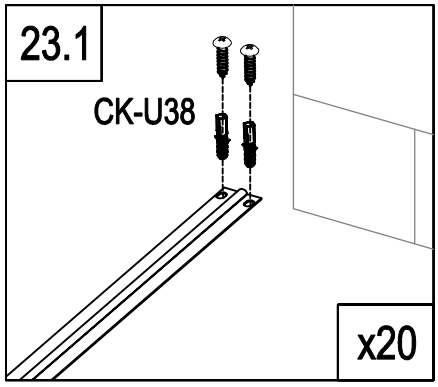


| | | |
|---|---|---|
| | AT-A17 | 5 |
| | CK-U38 | 40 |

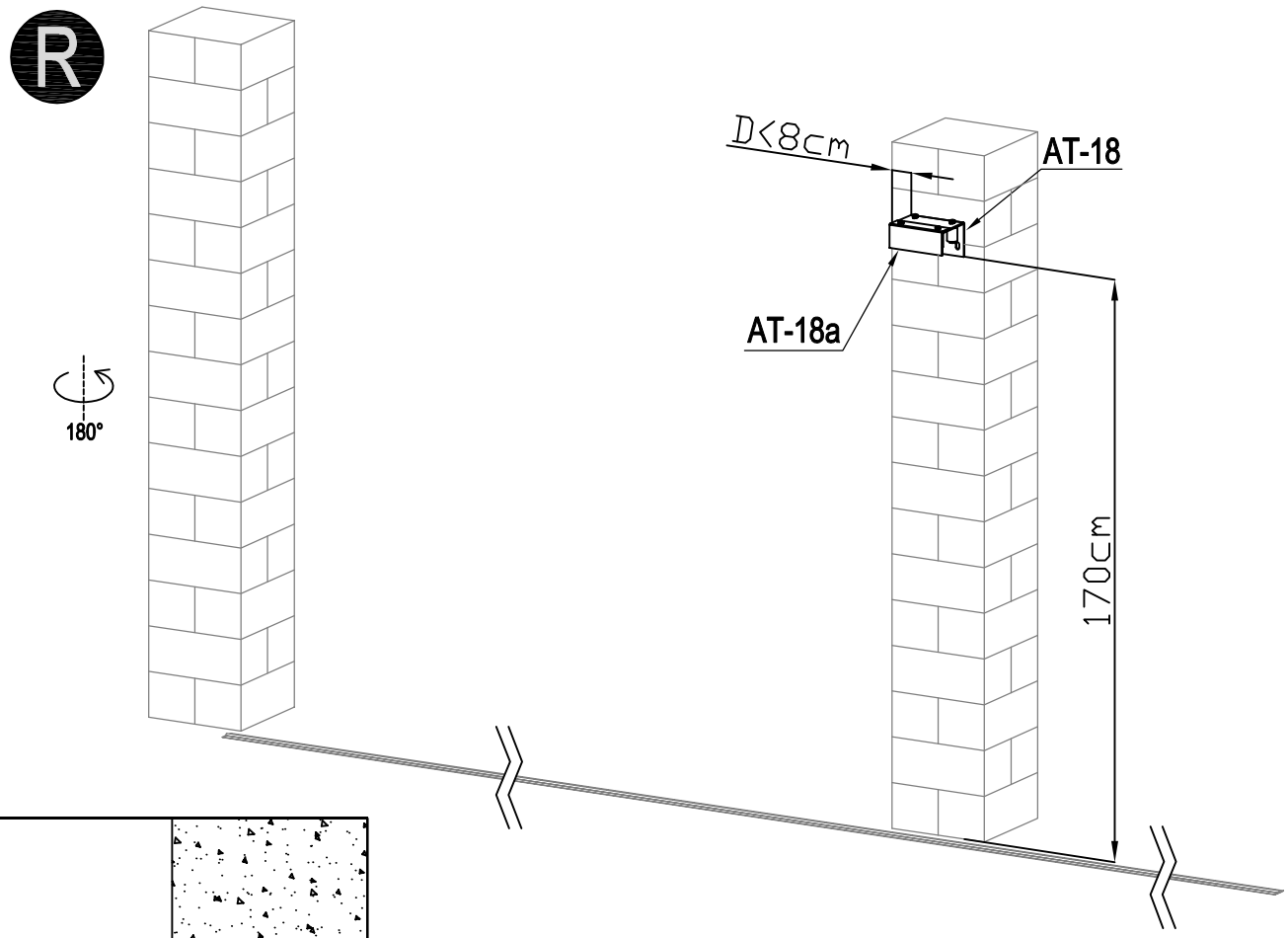


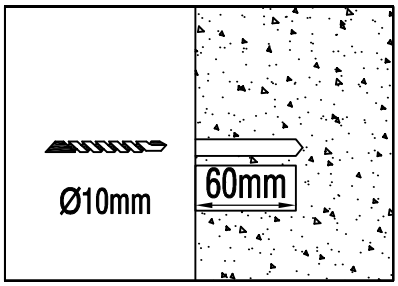


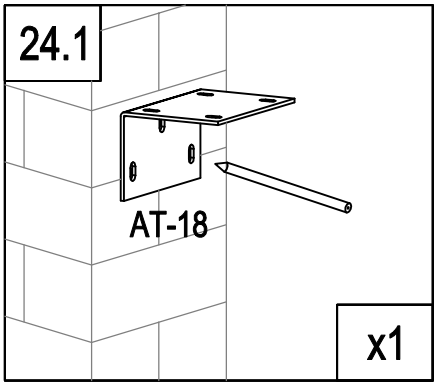


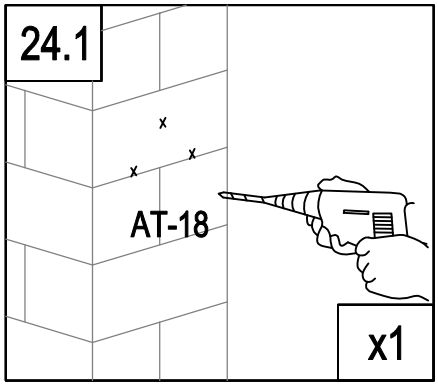


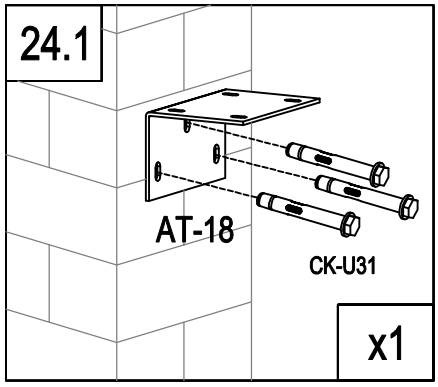


| | | |
|---|---|---|
| | AT-18 | 1 |
| | AT-18a | 1 |
| | AT-20 | 4 |
| | CK-U31 | 3 |

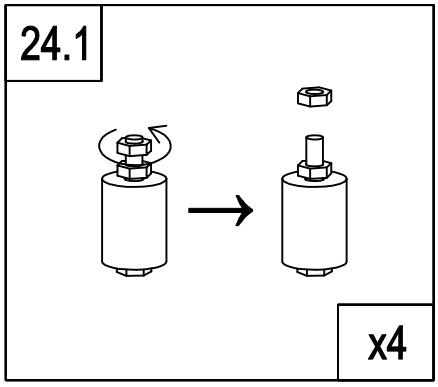


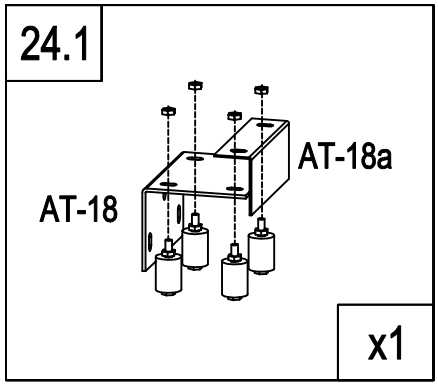

R

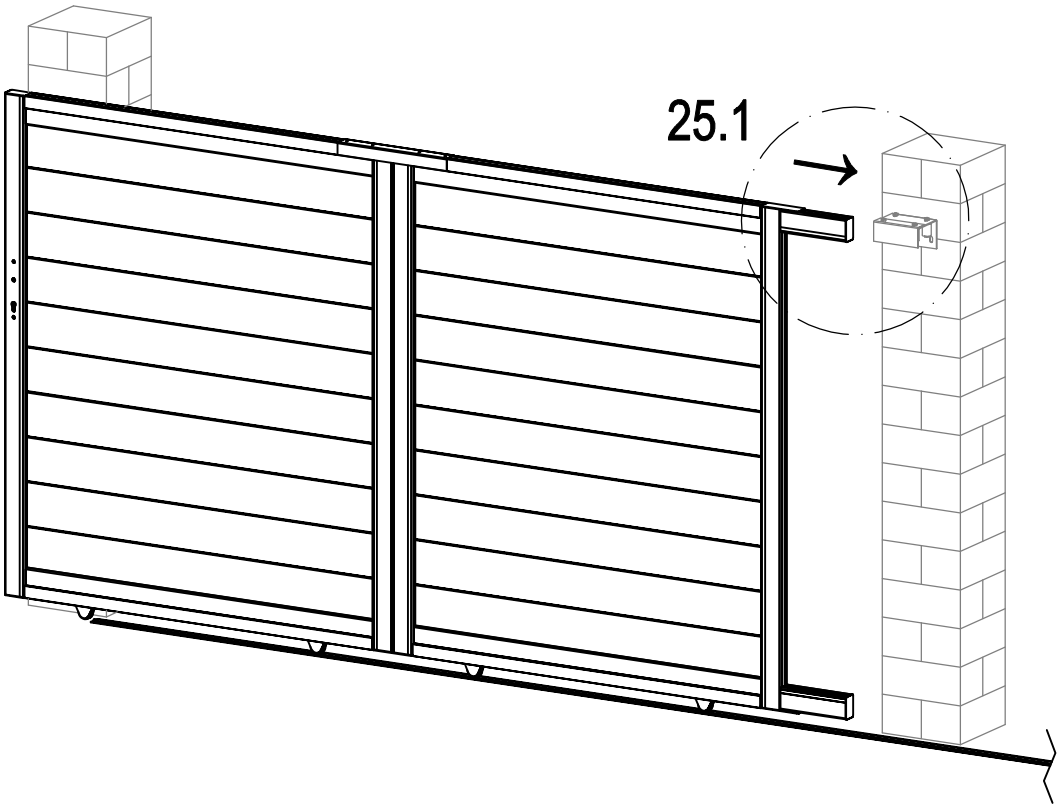


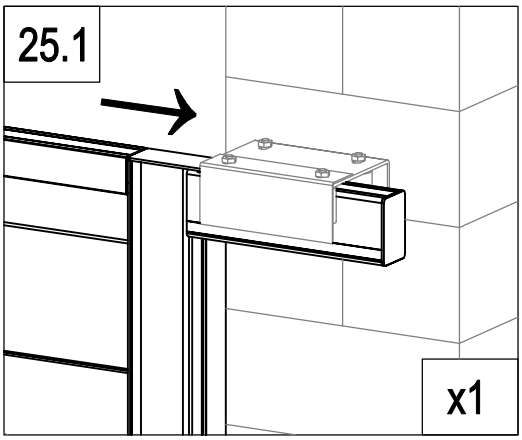

R

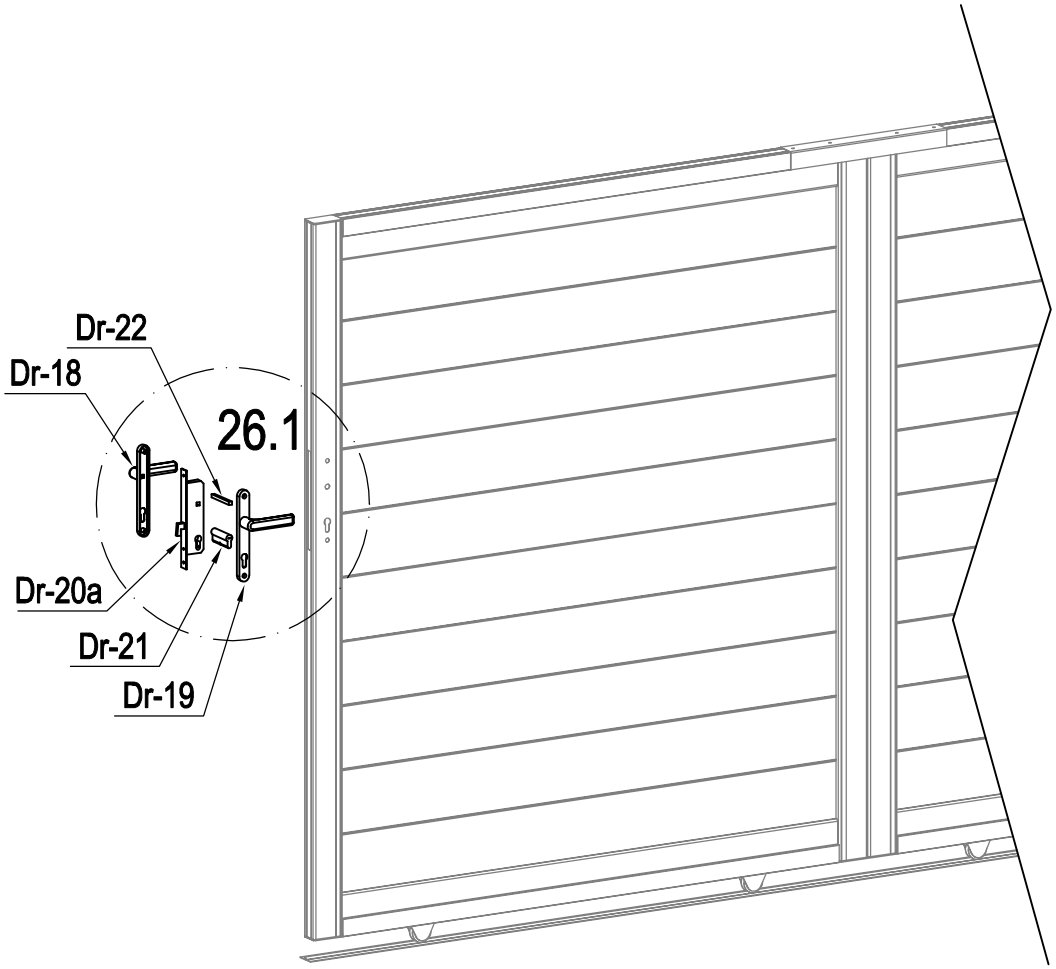


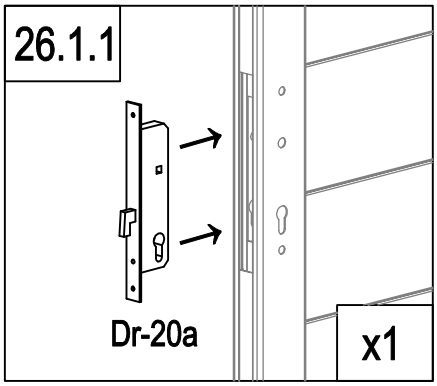


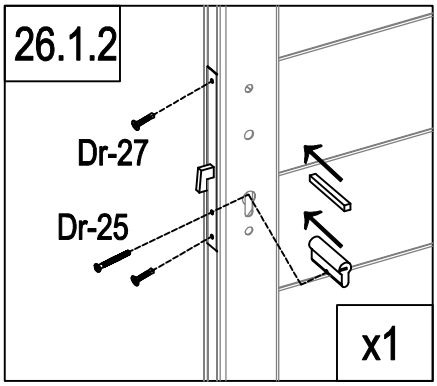


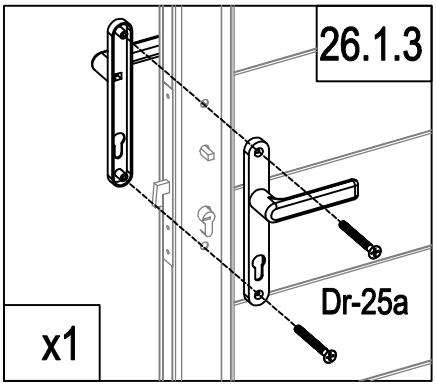


| | | |
|---|---|---|
| | Dr-20a | 1 |
| | Dr-21 | 1 |
| | Dr-22 | 1 |
| | Dr-25 | 1 |

| | | |
|---|---|---|
| | Dr-18 | 1 |
| | Dr-19 | 1 |
| | Dr-25a | 2 |
| | Dr-27 | 2 |

R

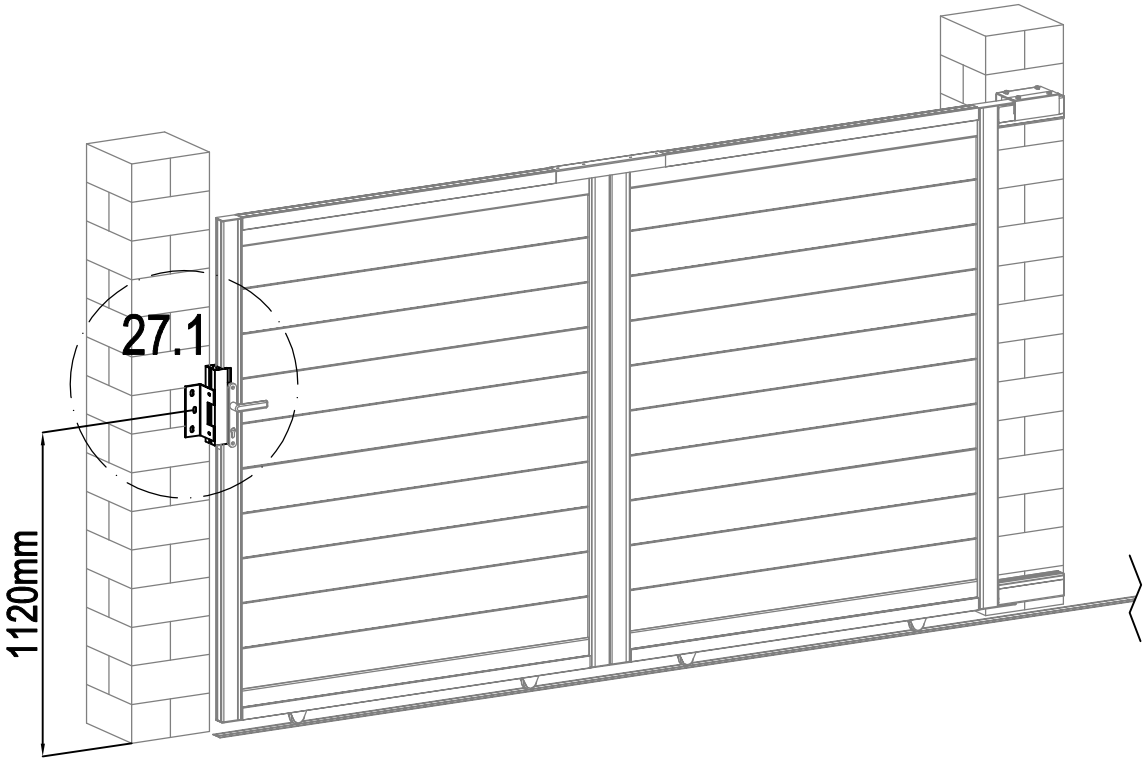


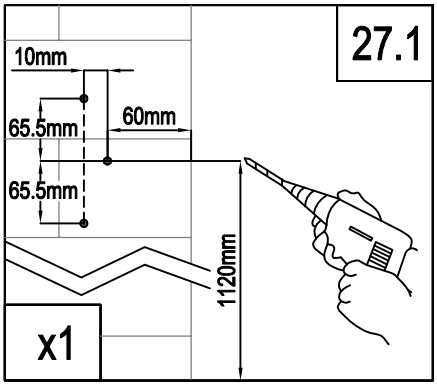


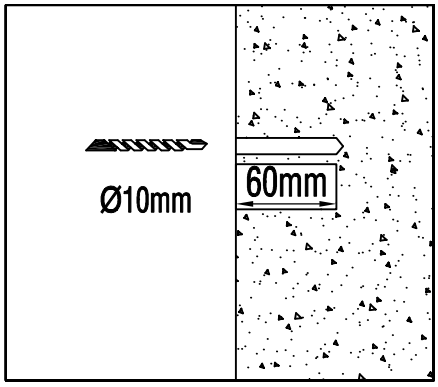


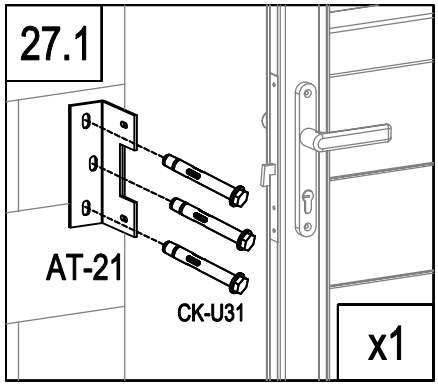


| | | |
|---|---|---|
| | AT-16 | 1 |
| | AT-21 | 1 |
| | CK-U36 | 2 |
| | CK-U31 | 3 |
| | AT-22J | 3 |

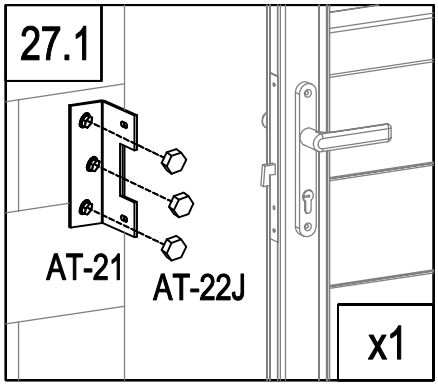


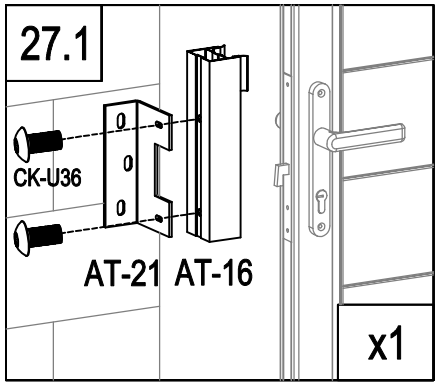

R

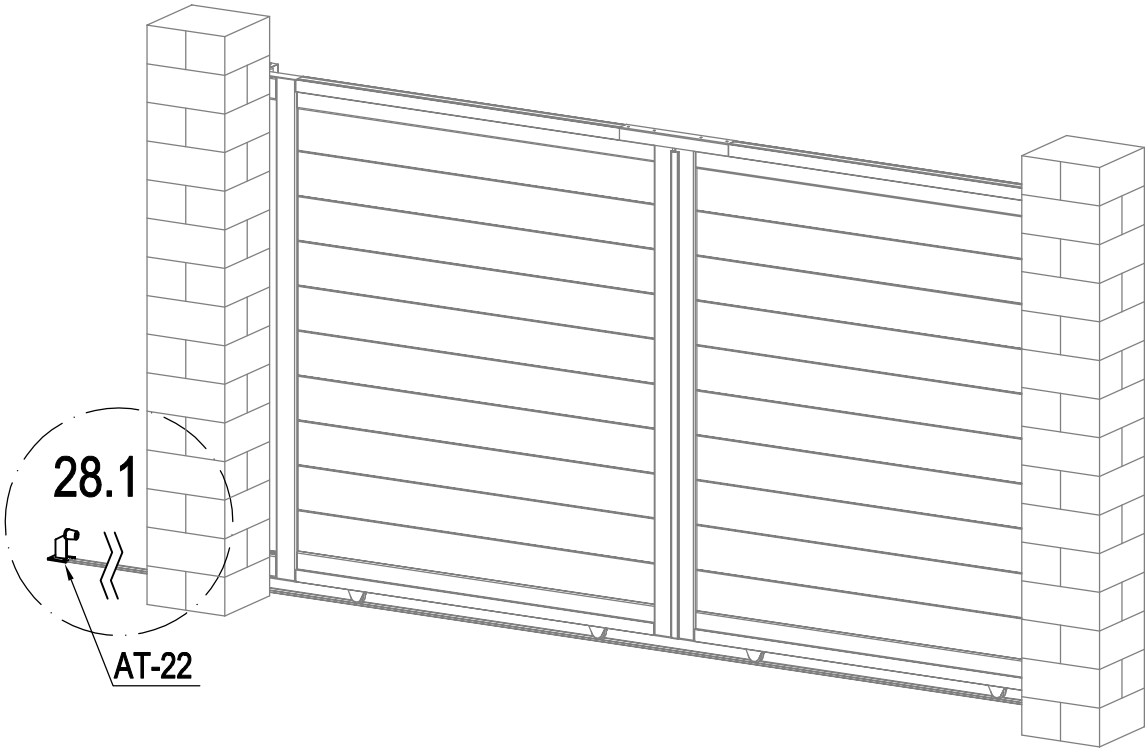


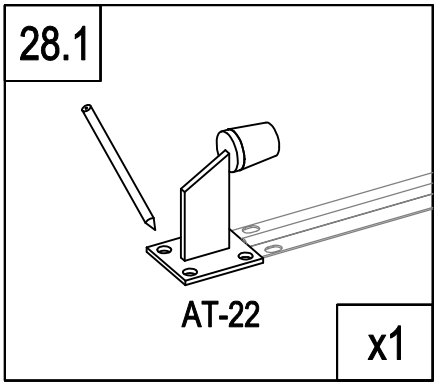


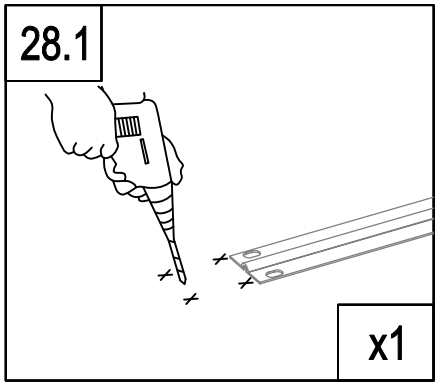


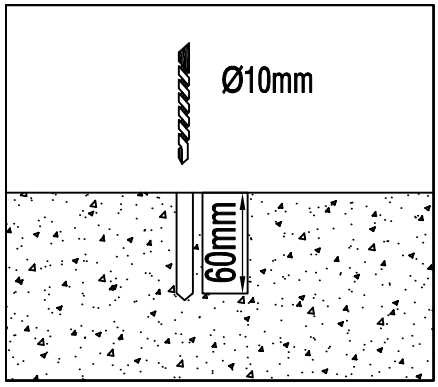


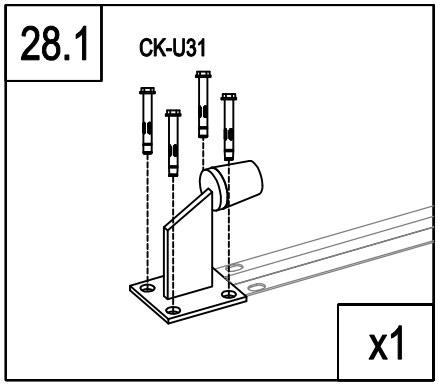


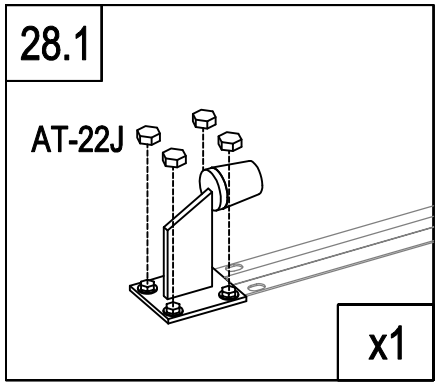


| | | |
|---|---|---|
| | AT-22 | 1 |
| | CK-U31 | 4 |
| | AT-22J | 4 |