INSTRUCTION MANUAL

220–240V~
50Hz

Max. Ø 80mm
E27 Max.60W

Marnie HL Gold Black 50
102538

1

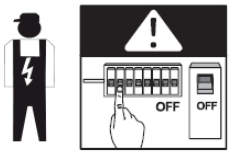

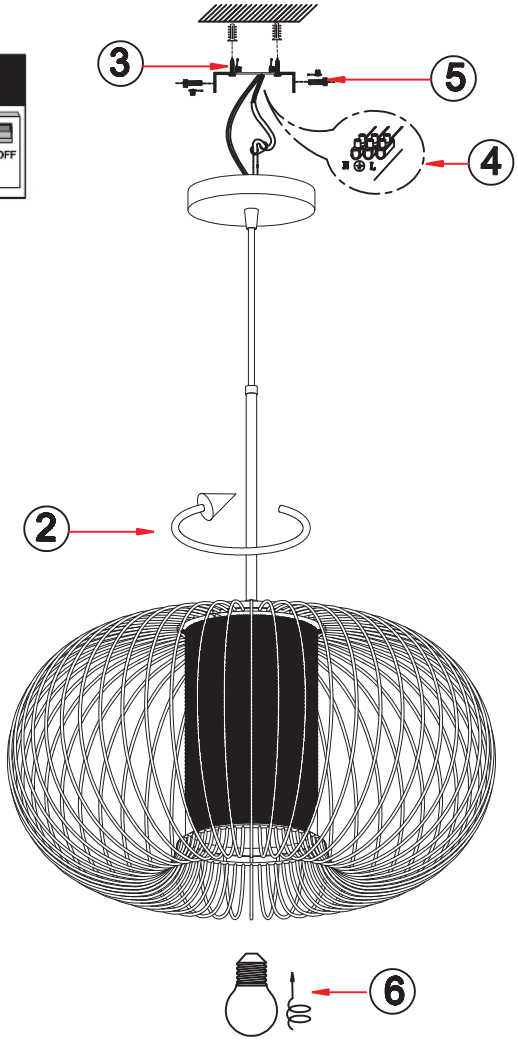

7

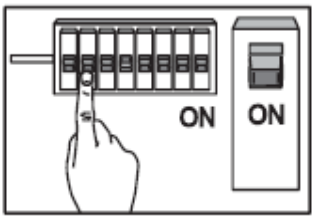

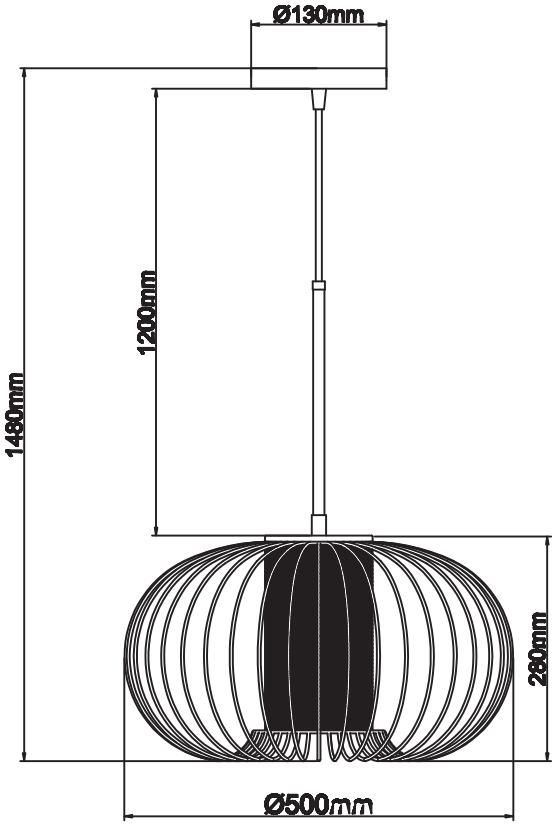

FittinQ B.V.
Smaragdweg 52, 5527 LB Hapert, The Netherlands
www.qazqa.nl

QAZQA