INSTRUCTION MANUAL

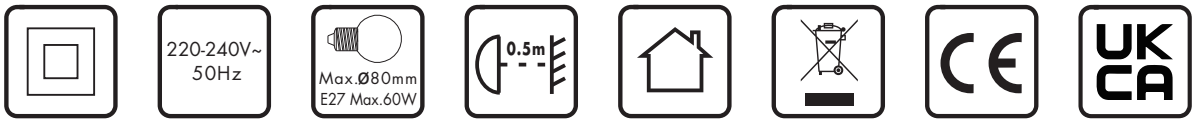

Baya CL Black
102989

1.

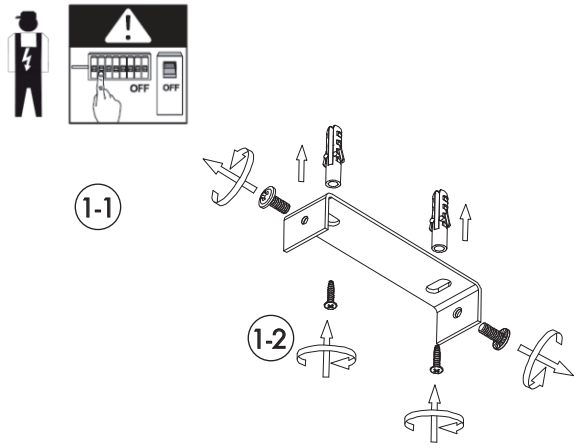

2.

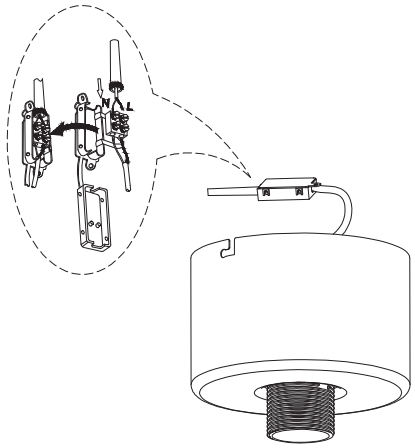

3.

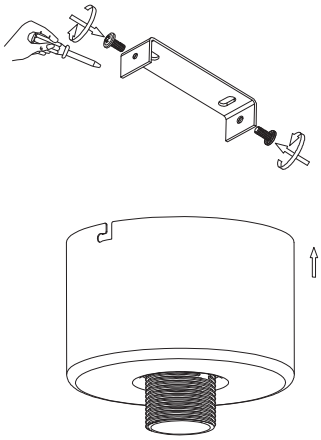

4.

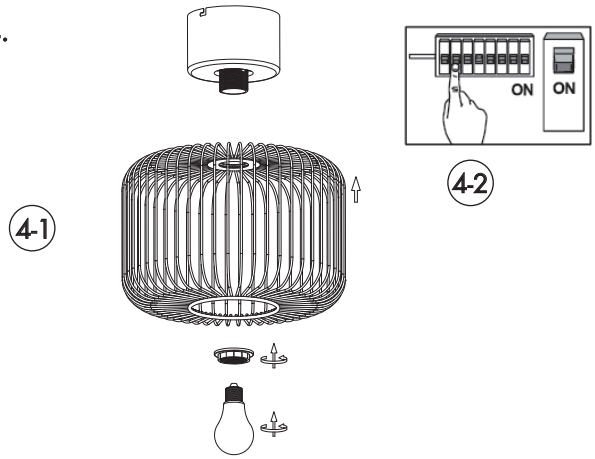

Overall Sizes:

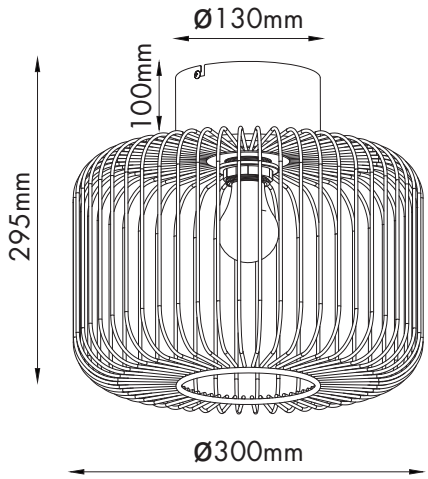

FittinQ B.V.
Smaragdweg 52, 5527 LB Hapert, The Netherlands
www.qazqa.nl

QAZQA