CASANOOV

OLGA 400B180

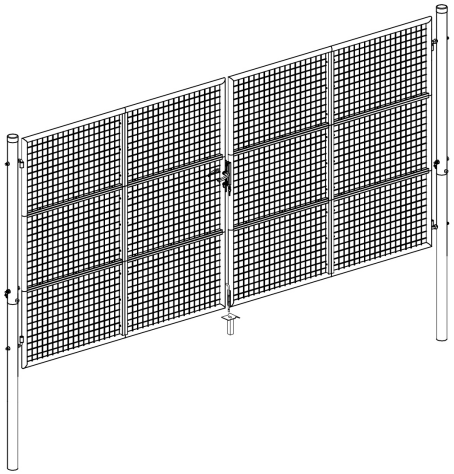

COM-000568	[x1]	COM-000570	[x1]
COM-000569	[x1]	COM-000571	[x1]

2H

X 2

EN FR DE ES PT IT NL PL FI SE DK CE

INSTRUCTION MANUAL / NOTICE DE MONTAGE / MONTAGEANLEITUNG / MANUAL DE MONTAJE / MANUAL DE MONTAGEM / MANUALE DI MONTAGGIO / MONTAGEHANDLEIDING / NSTRUKCJA MONTAŻU / KÄYTTÖOHJEET / BRUKSANVISNING / BRUGSANVISNING

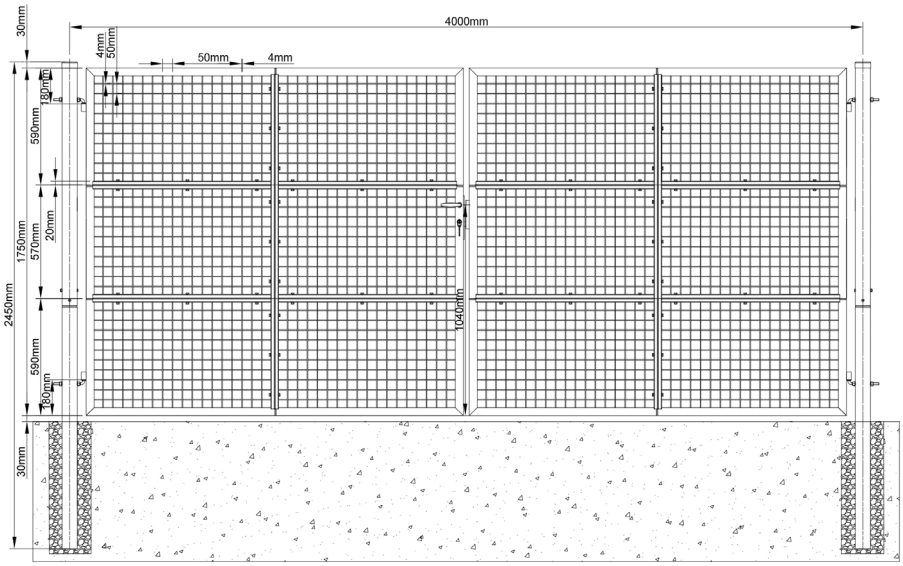
30mm
590mm
1750mm
2450mm
590mm
30mm
80mm
570mm
20mm
80mm
4mm
50mm
50mm
4mm
1040mm
4000mm

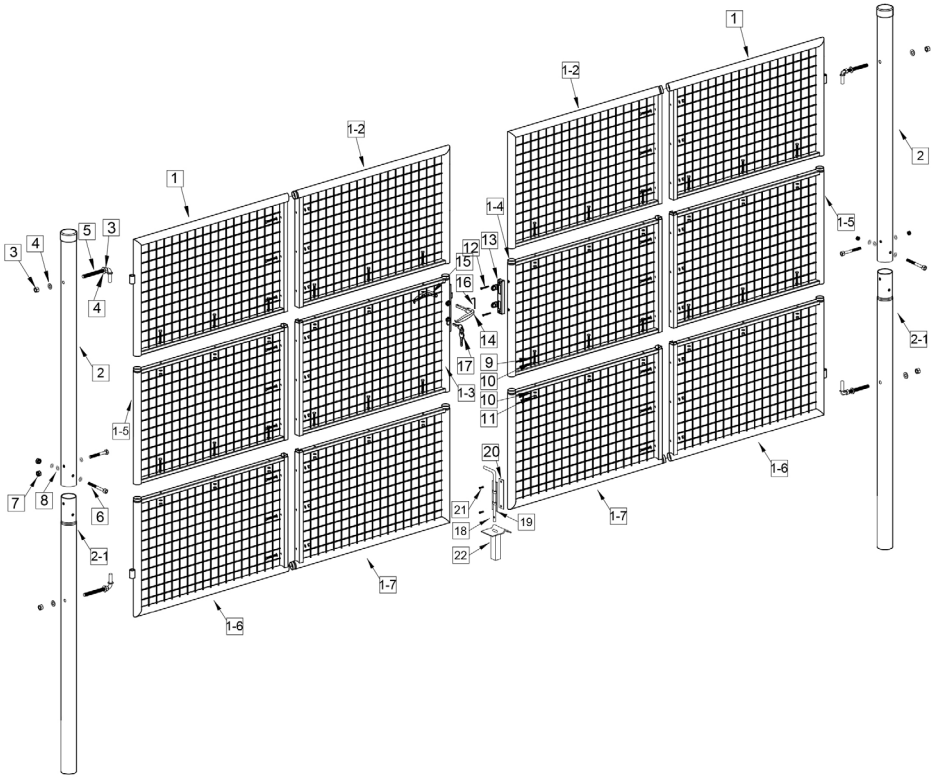
1
1-2
1-2
1
1-4
1-5
1-5
2
2
2-1
2-1
3
3
4
4
5
6
7
8
9
10
10
11
12
13
14
15
16
17
18
19
20
21
22
1-3
1-6
1-6
1-7
1-7

PICTURES	REF-PCS	SIZE	QUANTITY
	1	950×590mm	2
	1-2	950×590mm	2
	1-3	950×580mm	1
	1-4	950×580mm	1
	1-5	950×580mm	2
	1-6	950×600mm	2
	1-7	950×600mm	2
	2	φ76×1275mm	2
	2-1	φ76×1275mm	2
	3	20×10mm	8
	4	24×1mm	8
	5	12×140mm	4
	6	10×90mm	4
	7	20×7mm	4
	8	20×1mm	8
	9	8×55mm	42
	10	17×1mm	84
	11	15×5mm	42
	12	6×35mm	2
	13	30×173mm	1
	14	18×110×105mm	1
	15	18×37×105mm	1
	16	3×18×52mm	1
	17	22×45mm	3
	18	12×245mm	1
	19	23×140mm	1
	20	23×140mm	1
	21	6×20mm	2
	22	60×95×145mm	1

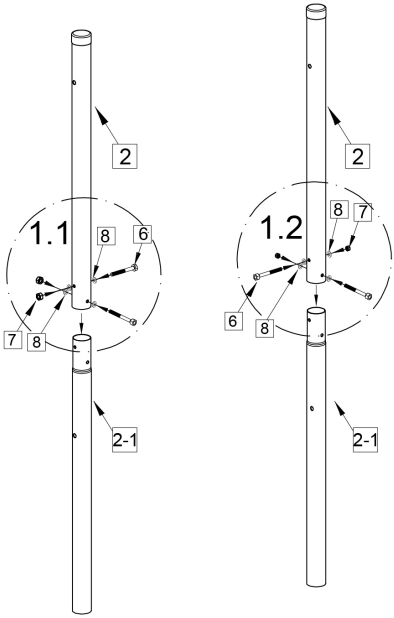

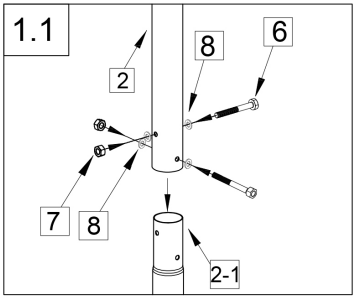

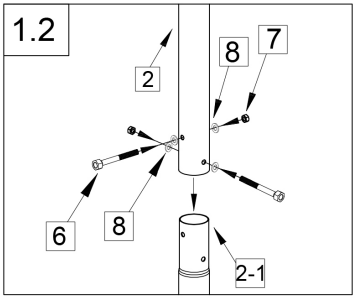

Thumbnails	No.	Size	Quantity
	6	10×90mm	4
	7	20×7mm	4
	8	20×1mm	8

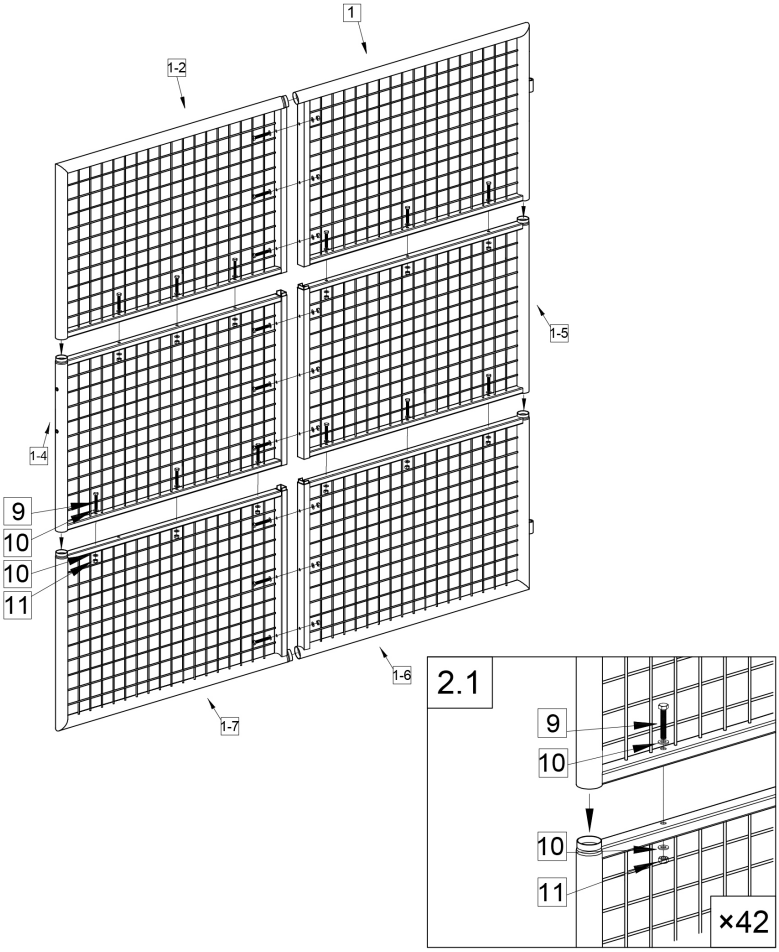

Thumbnails	No.	Size	Quantity
	9	8×55mm	42
	10	17×1mm	84
	11	15×5mm	42

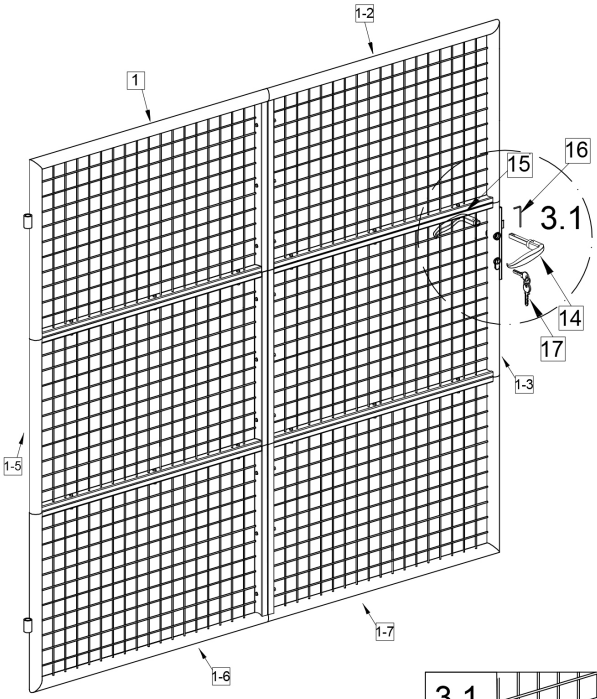

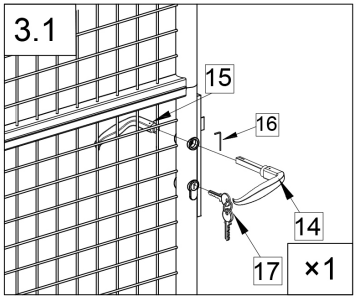

Thumbnails	No.	Size	Quantity
	14	18×110×105mm	1
	15	18×37×105mm	1
	16	3×18×52mm	1
	17	22×45mm	3

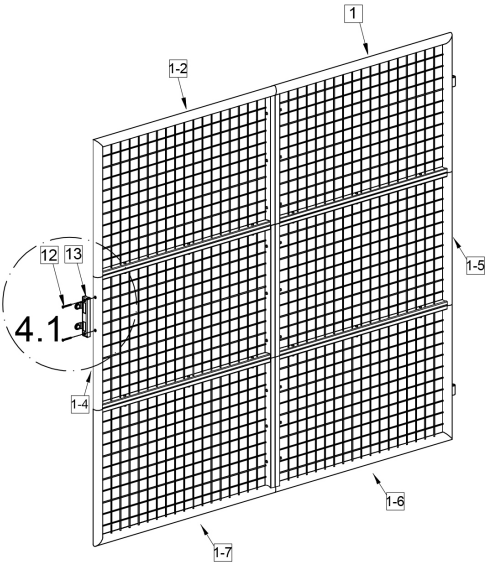

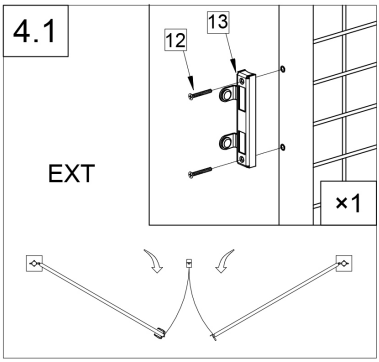

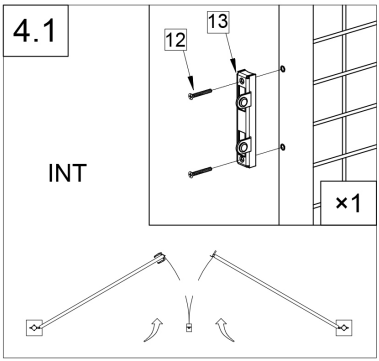

Thumbnails	No.	Size	Quantity
–	12	6×35mm	2
	13	30×173mm	1

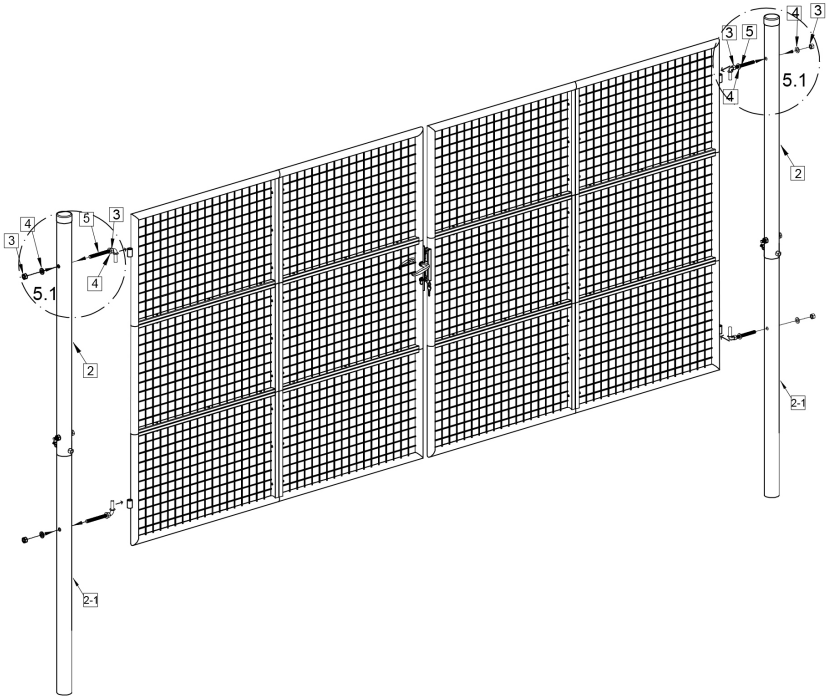

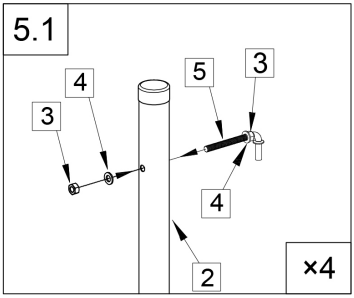

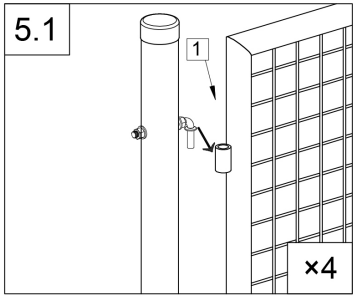

Thumbnails	No.	Size	Quantity
	3	20×10mm	8
	4	24×1mm	8
	5	12×140mm	4

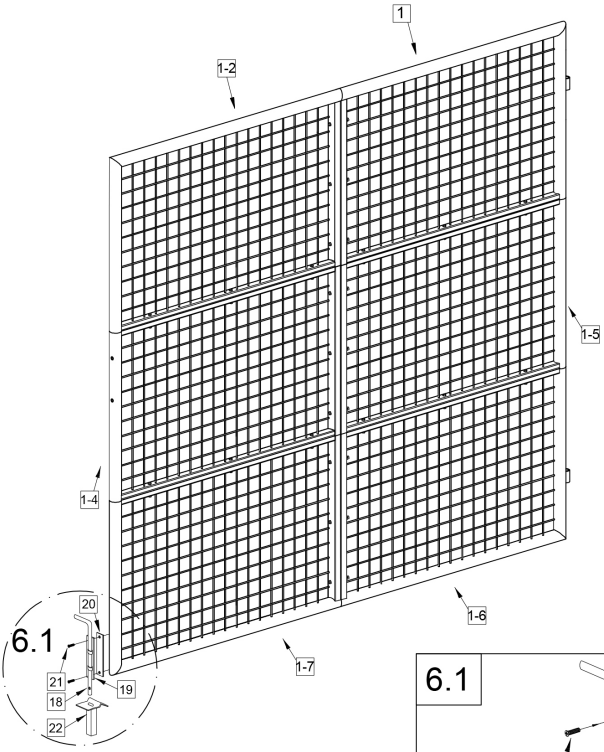

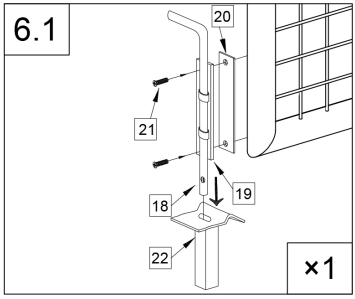

Thumbnails	No.	Size	Quantity
	18	12×245mm	1
	19	23×140mm	1
	20	23×140mm	1
	21	6×20mm	2
	22	60×95×145mm	1

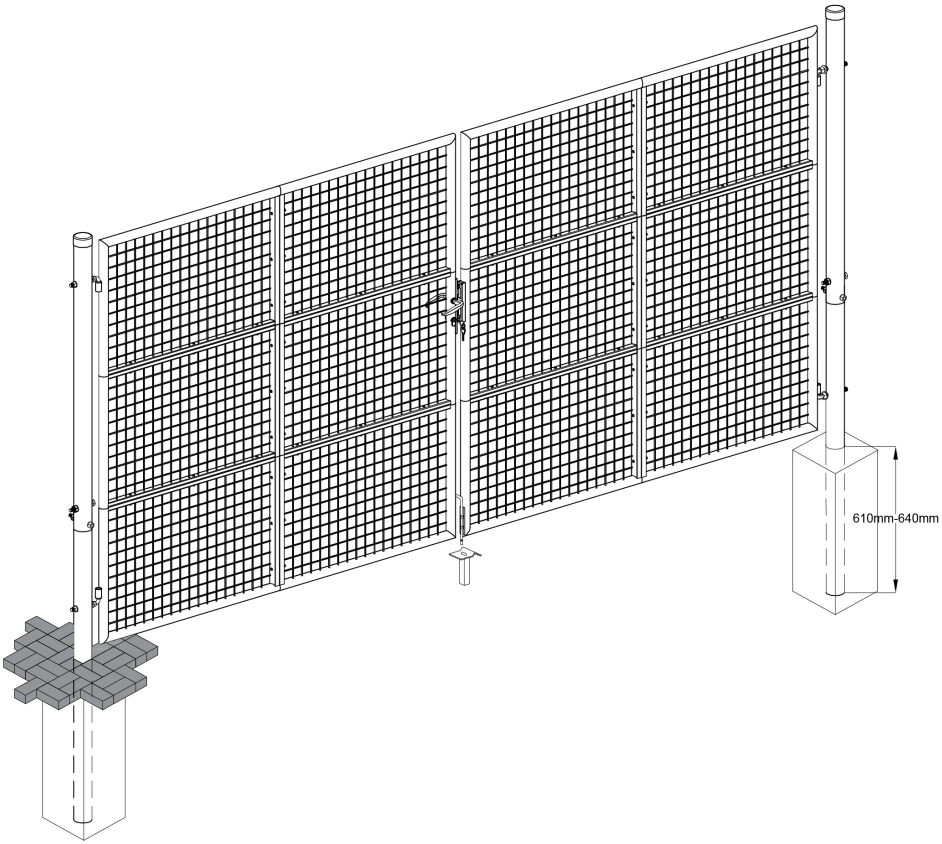
610mm-640mm