CASANOOV

EIGER 400B160

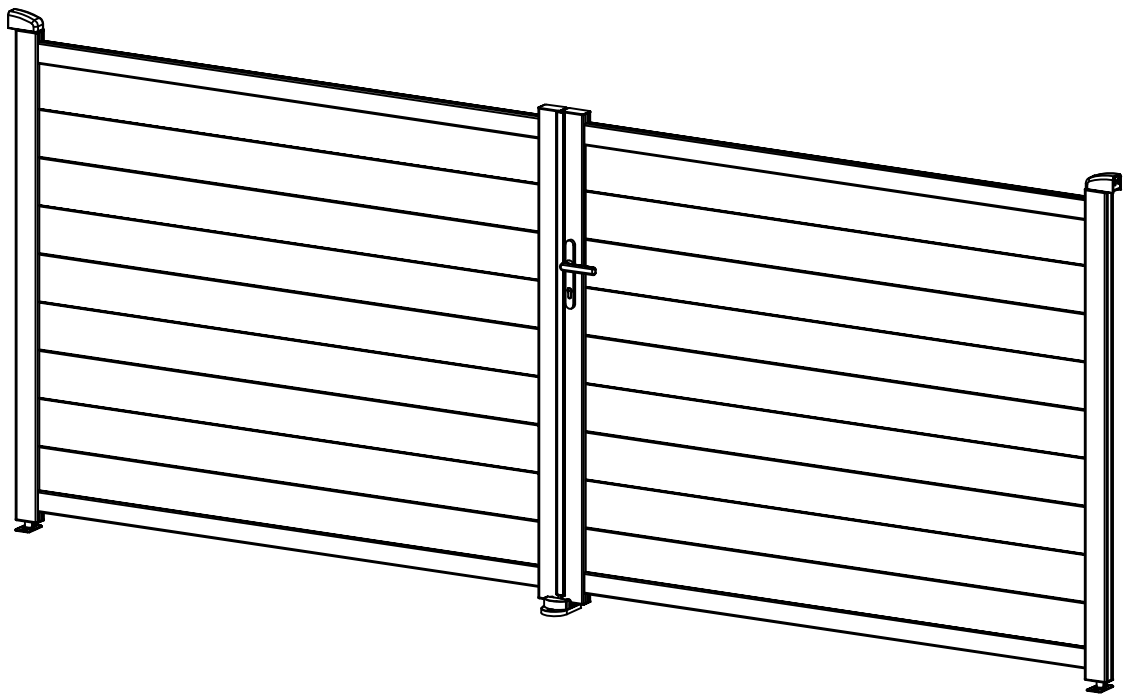

COM-000262	[x1]
COM-000263	[x1]
COM-000264	[x1]

FR EN ES DE IT NL PL CE

NOTICE DE MONTAGE / INSTRUCTION MANUAL / MANUAL DE MONTAJE / MONTAGEANLEITUNG / MANUALE DI MONTAGGIO / MONTAGEHANDLEIDING / INSTRUKCJA MONTAŻU

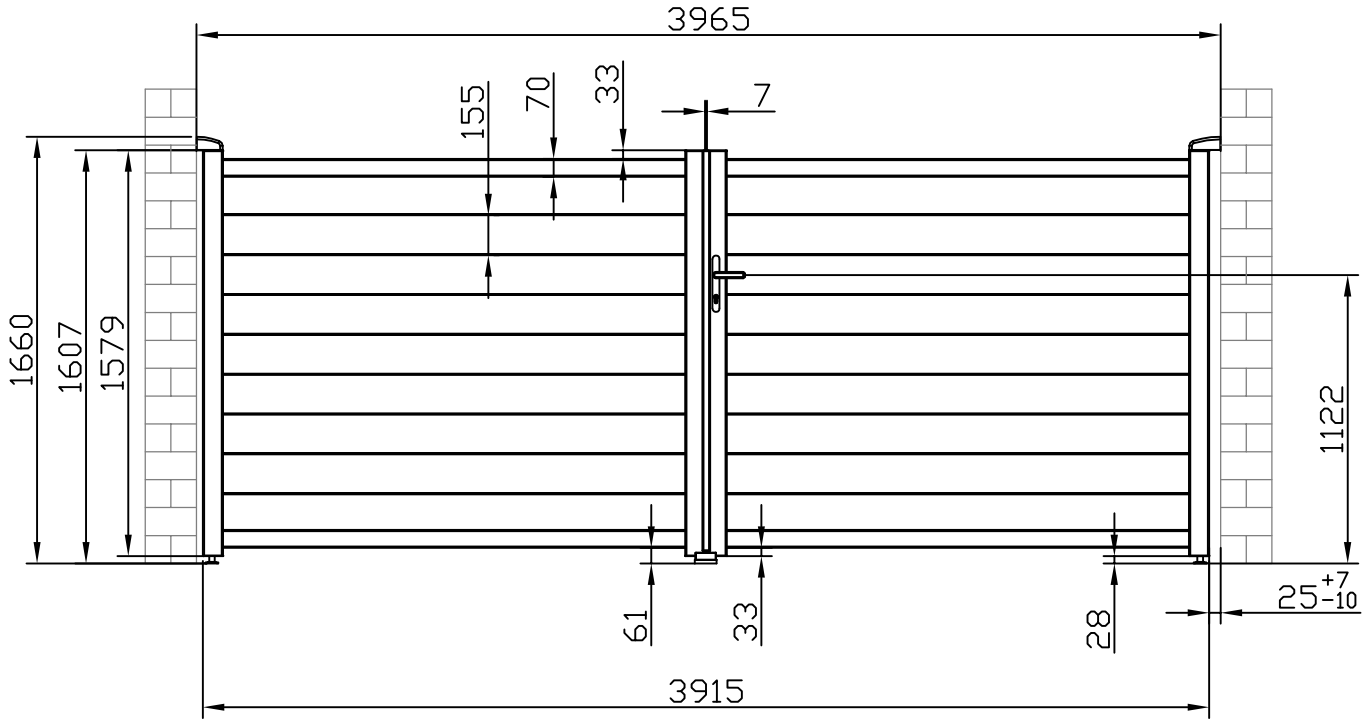
3965
155
70
33
7
1660
1607
1579
1122
61
33
28
25 +7 -10
3915

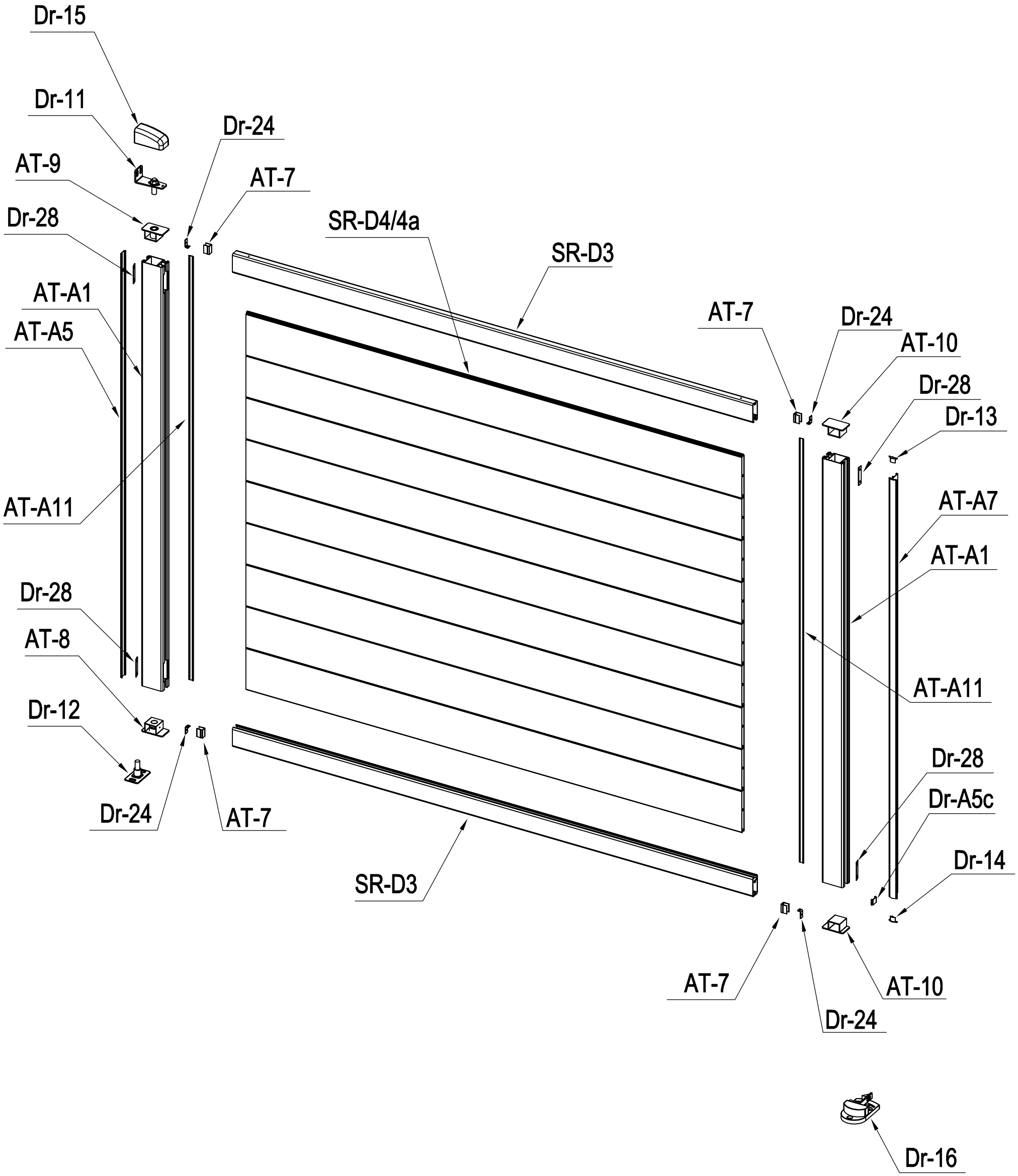
Dr-15
Dr-11
Dr-24
AT-9
AT-7
Dr-28
SR-D4/4a
SR-D3
AT-A1
AT-A5
AT-7
Dr-24
AT-10
Dr-28
Dr-13
AT-A11
AT-A7
AT-A1
Dr-28
AT-8
AT-A11
Dr-12
Dr-28
Dr-A5c
Dr-24
AT-7
Dr-14
SR-D3
AT-7
AT-10
Dr-24
Dr-16

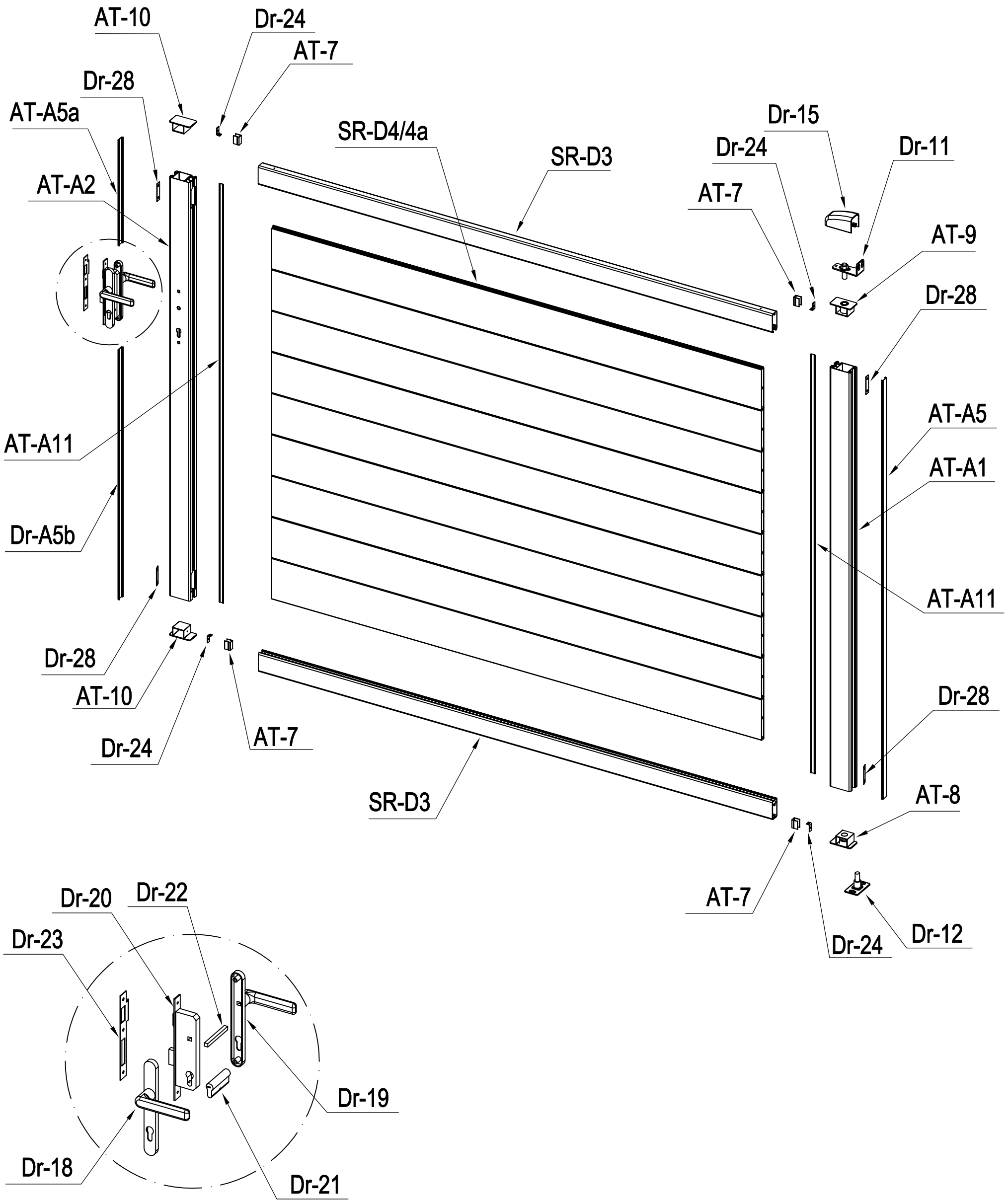
AT-10
Dr-24
AT-7
Dr-28
AT-A5a
SR-D4/4a
SR-D3
Dr-15
Dr-24
Dr-11
AT-A2
AT-7
AT-9
Dr-28
AT-A5
AT-A11
AT-A1
Dr-A5b
AT-A11
Dr-28
AT-10
Dr-24
AT-7
Dr-28
SR-D3
AT-8
AT-7
Dr-24
Dr-12
Dr-20
Dr-22
Dr-23
Dr-19
Dr-18
Dr-21

PART LIST

IMAGE	NO.	L.(mm)	QTY
	AT-A1	1573	3
	AT-A2	1573	1
	SR-D3	1931	4
	SR-D4	1840	16
	SR-D4a (+SR-D15)	1840	2
	AT-A5	1573	2
	AT-A5a	395.5	1
	Dr-A5b	937	1
	Dr-A5c	19.5	1
	AT-A11	1573	4
	AT-7	29.5	8
	AT-A7	1553	1
	AT-8		2
	AT-9		2
	AT-10		4
	Dr-11		2
	Dr-12		2
	Dr-13		1
	Dr-14		1
	Dr-15		2
	Dr-16		1

IMAGE	NO.	L.(mm)	QTY
	Dr-17		2
	Dr-31		4
	Dr-18		1
	Dr-19		1
	Dr-20		1
	Dr-21		1
	Dr-22		1
	Dr-23		1
	Dr-24		8
	Dr-25		1
	Dr-25a		2
	Dr-26		3
	Dr-27		2
	CK-J30		8
	CK-J31		8
	CK-J32		12
	CK-J33		16
	CK-J34		3
	CK-J35		3
	CK-J36		72
	Dr-28		8

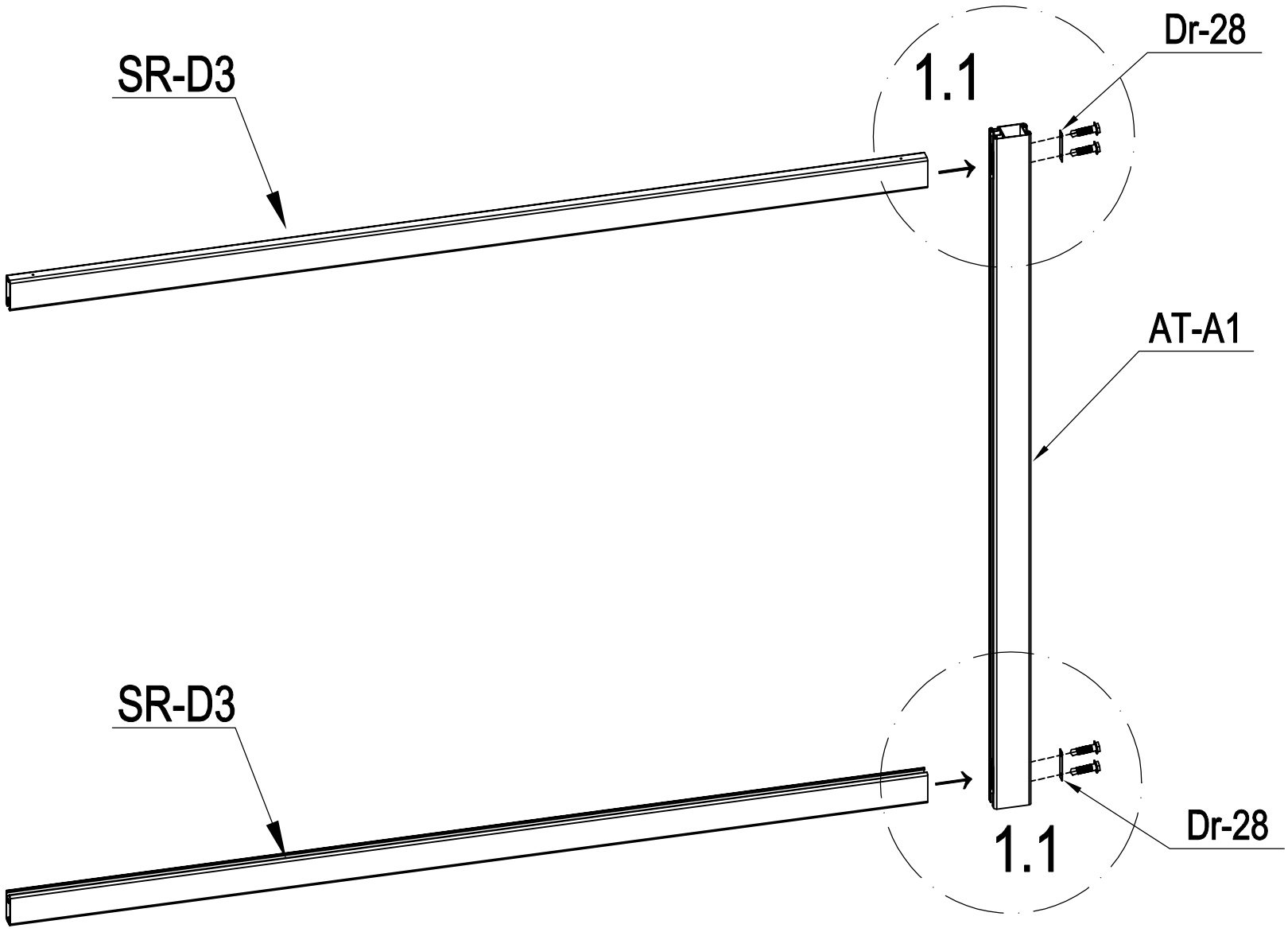

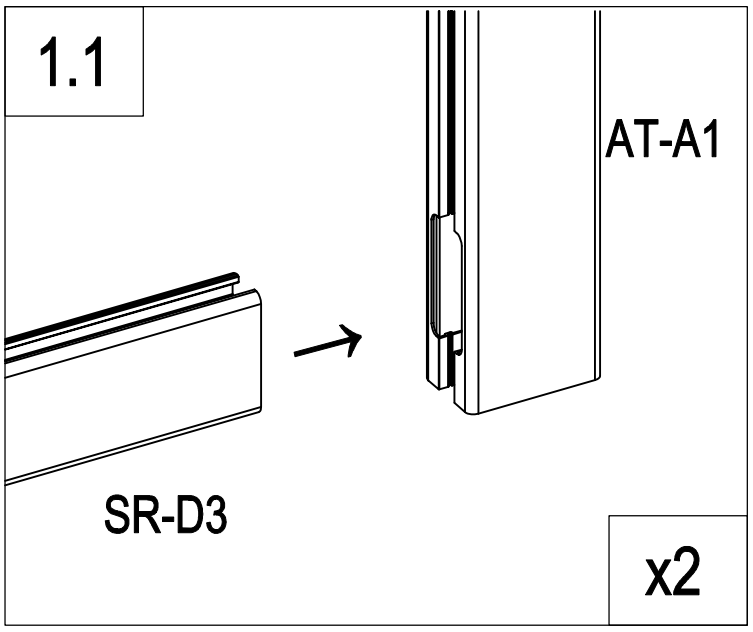

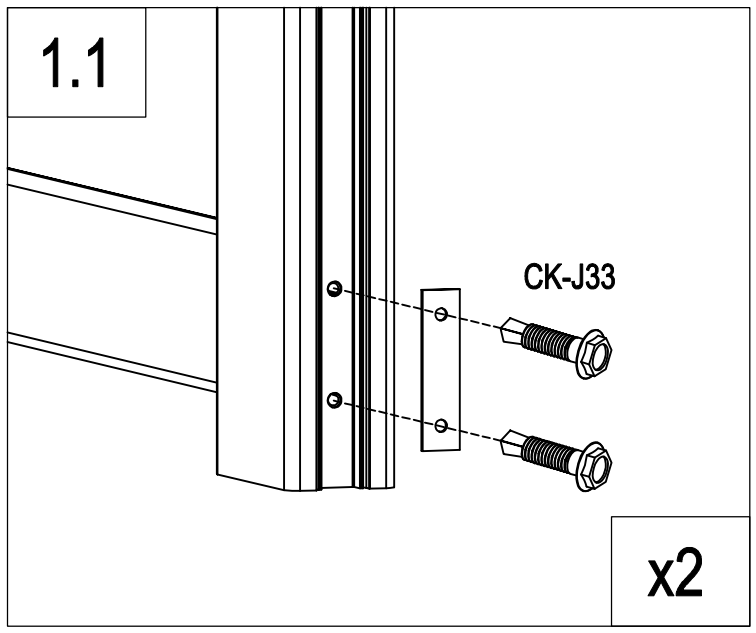

	AT-A1	1
	SR-D3	2
	Dr-28	2
	CK-J33	4

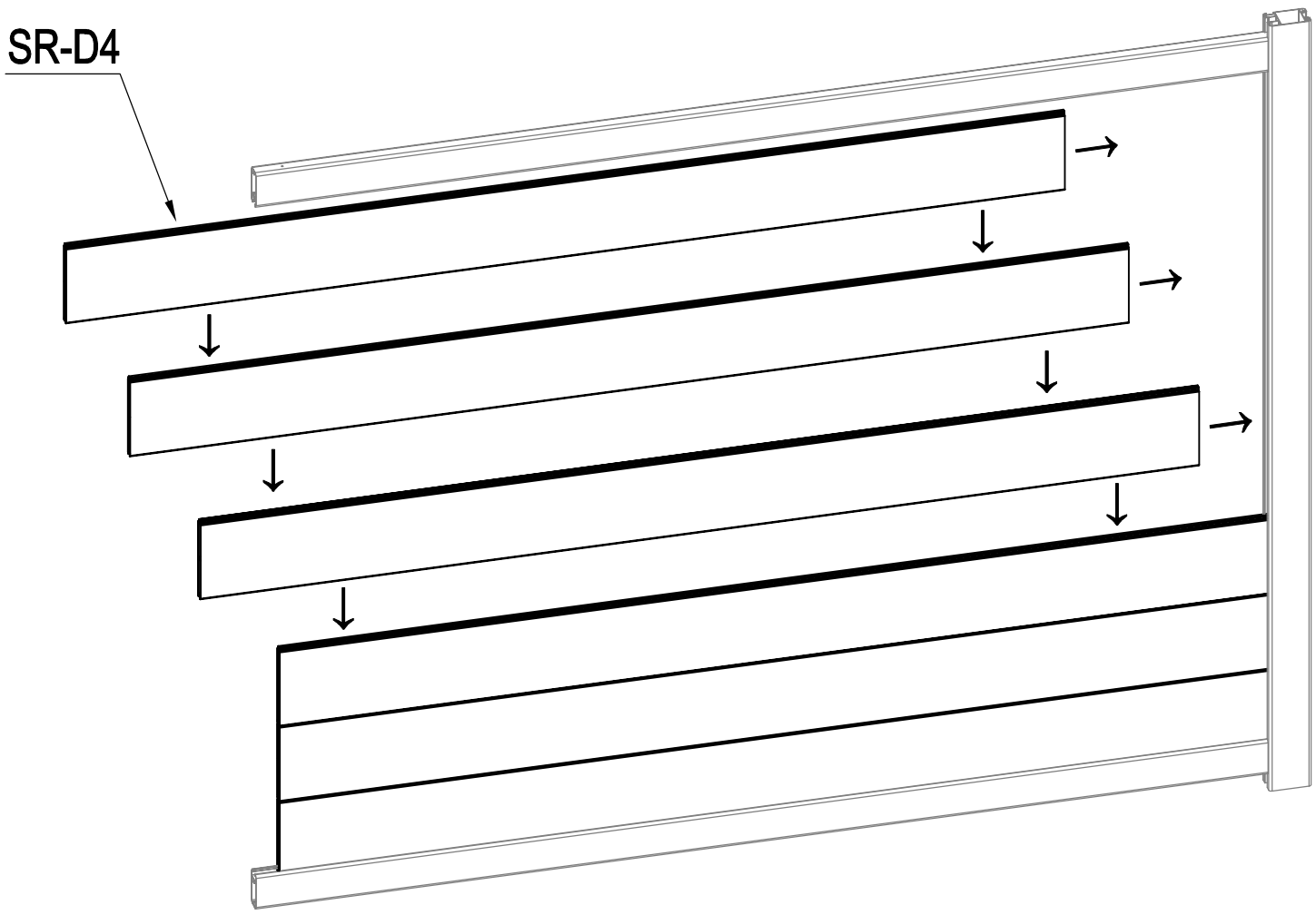

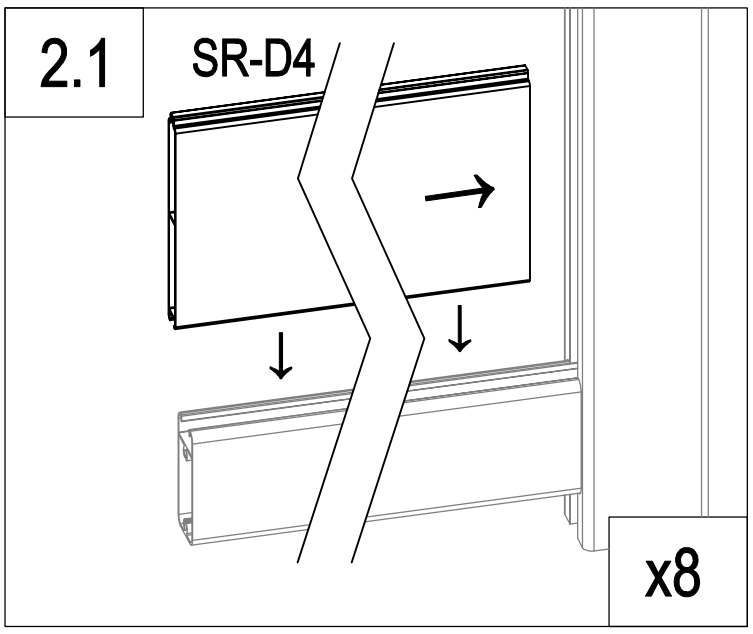

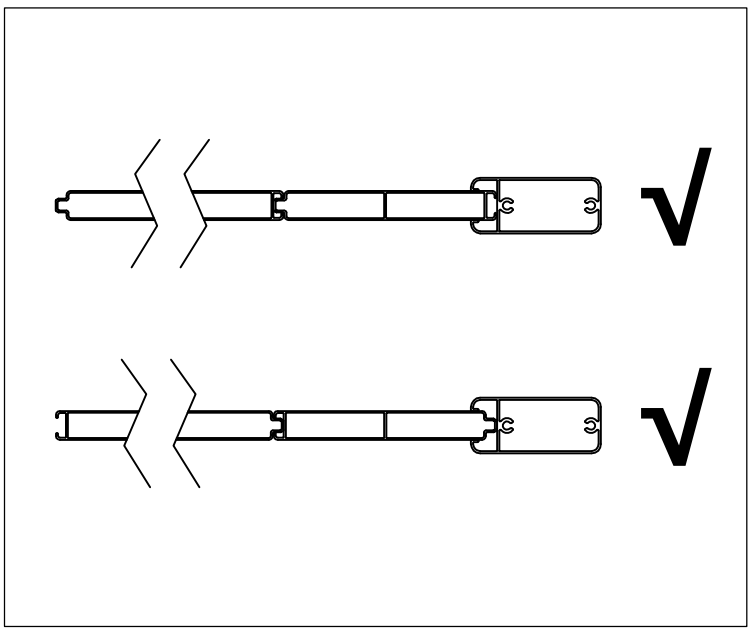

	SR-D4	8

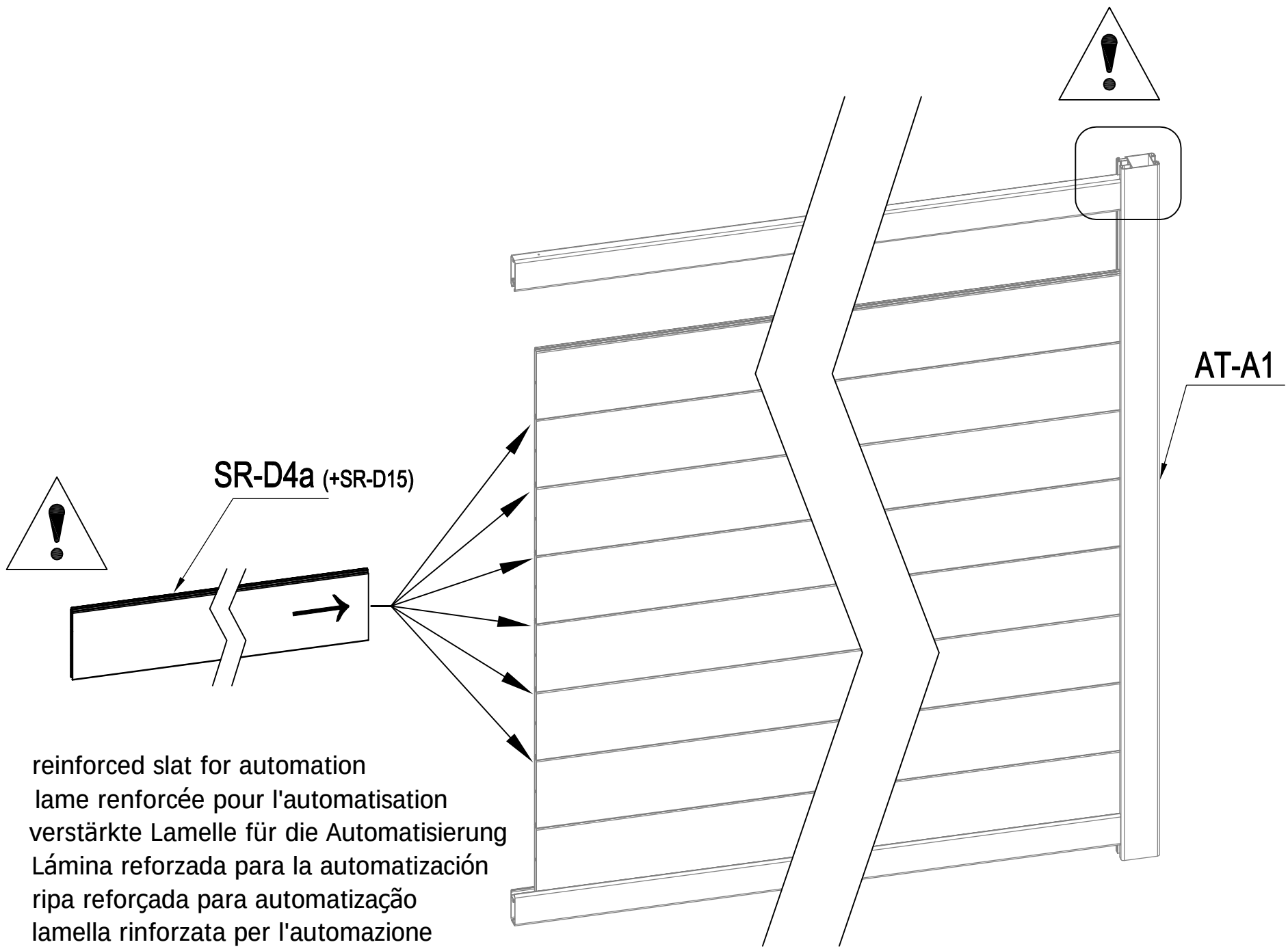

EN: reinforced slat for automation
FR: lame renforcée pour l'automatisation
DE: verstärkte Lamelle für die Automatisierung
ES: Lámina reforzada para la automatización
PT: ripa reforçada para automatização
IT: lamella rinforzata per l'automazione
NL: versterkte lat voor automatisering
PL: wzmocniona listwa do automatyzacji

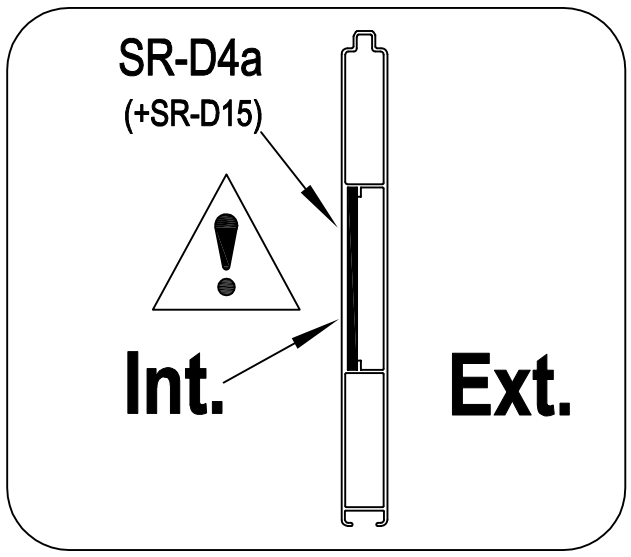

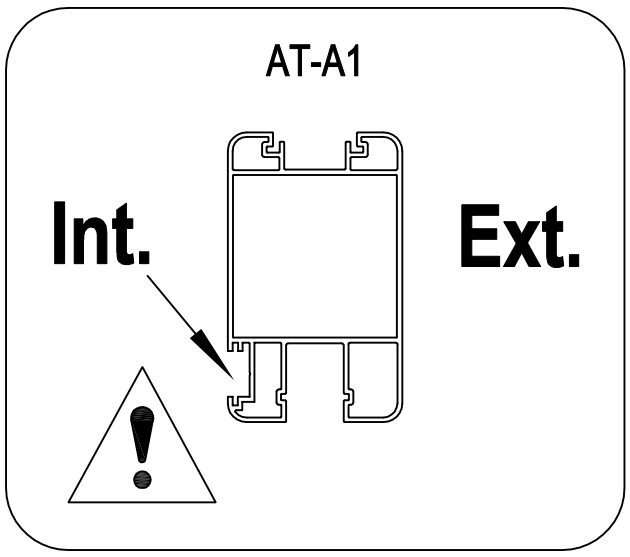

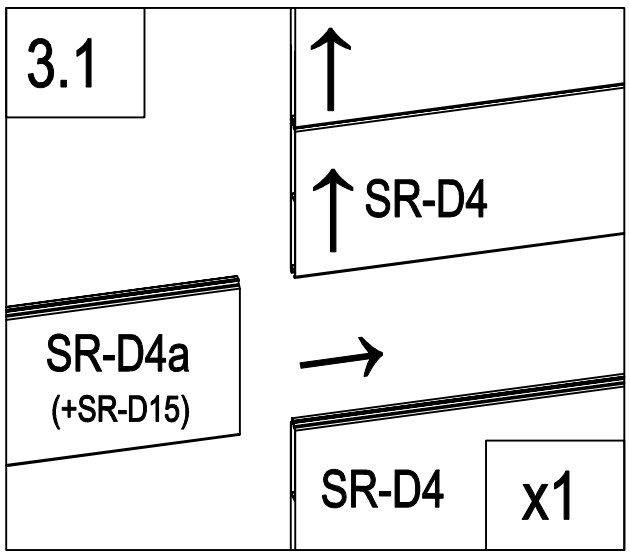

	SR-D4a (+SR-D15)	1

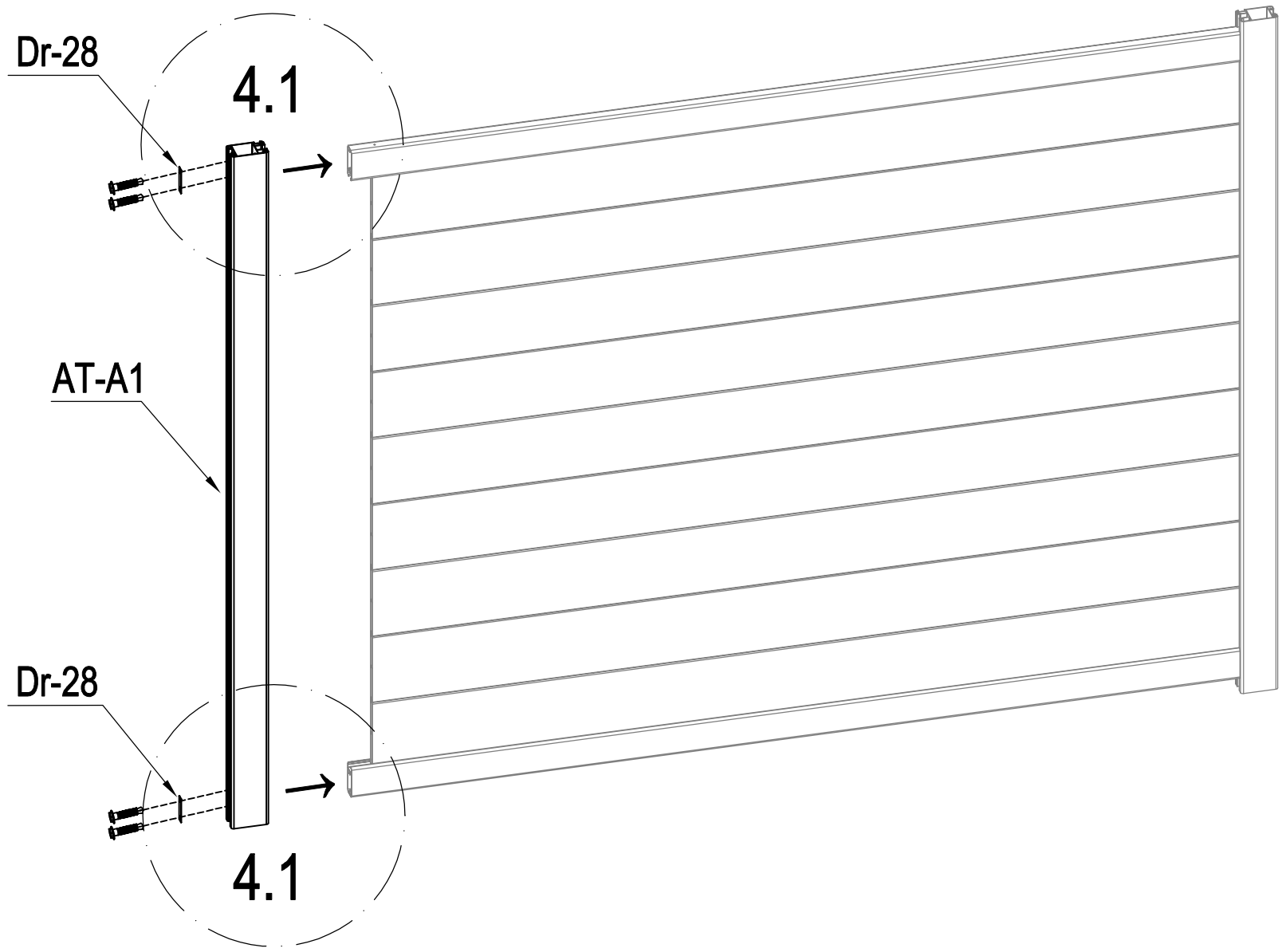

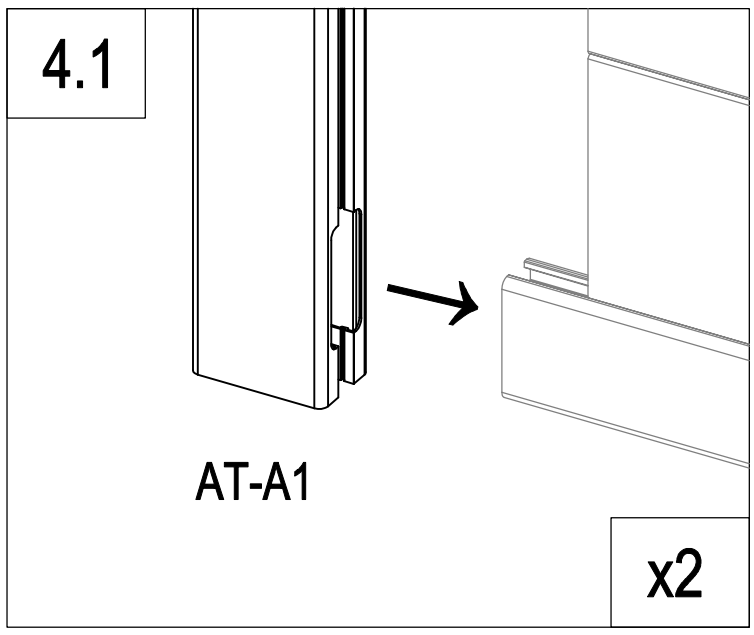

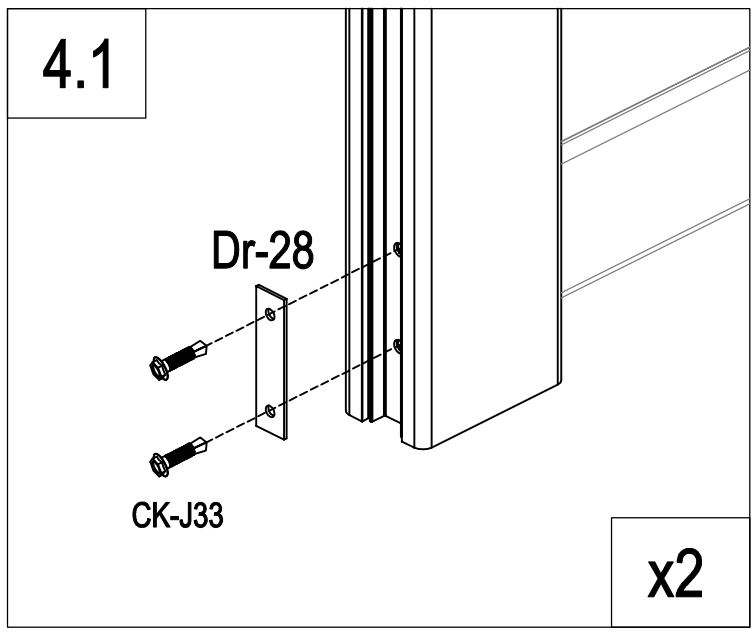

	AT-A1	1
	Dr-28	2
	CK-J33	4

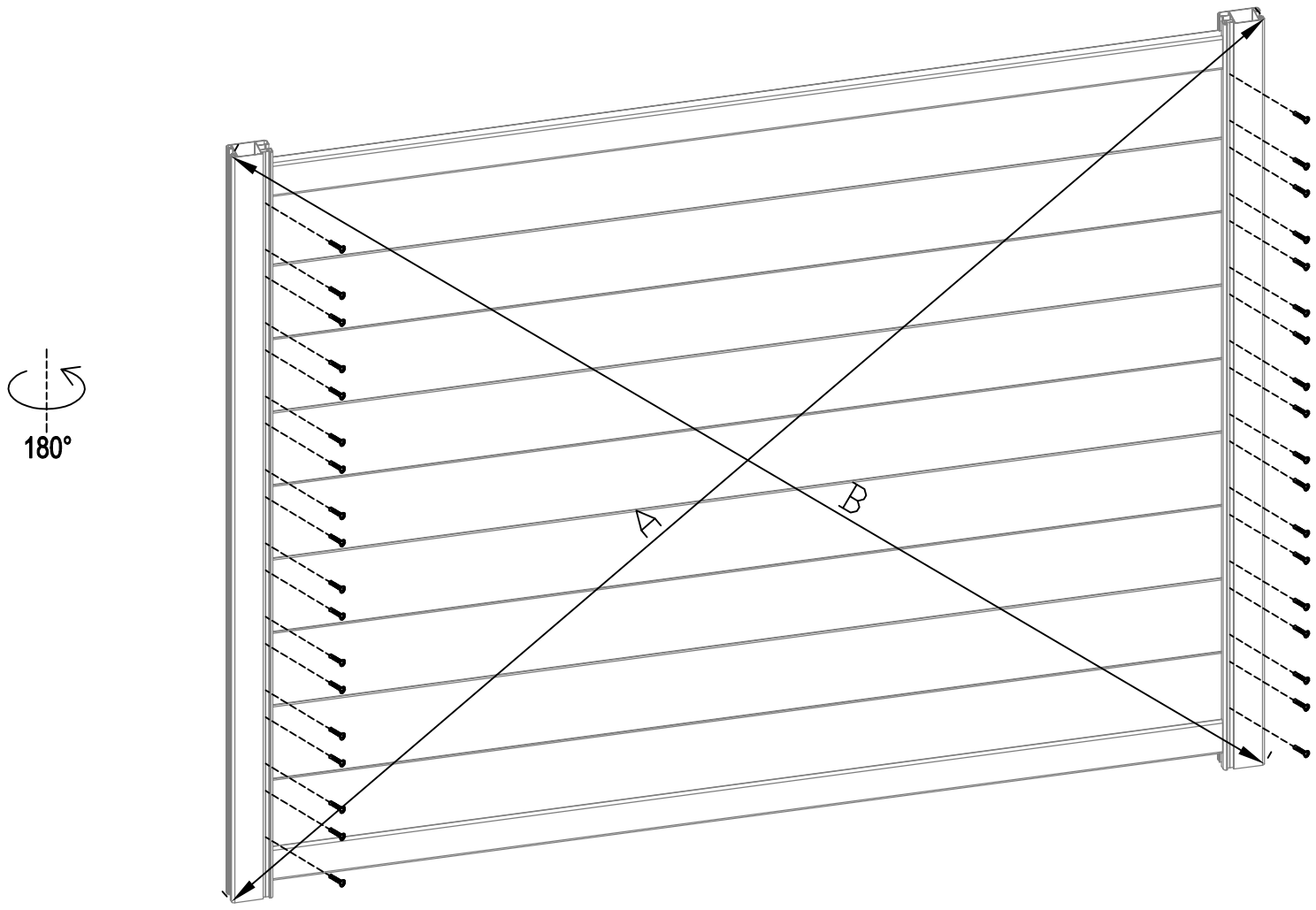

A=B

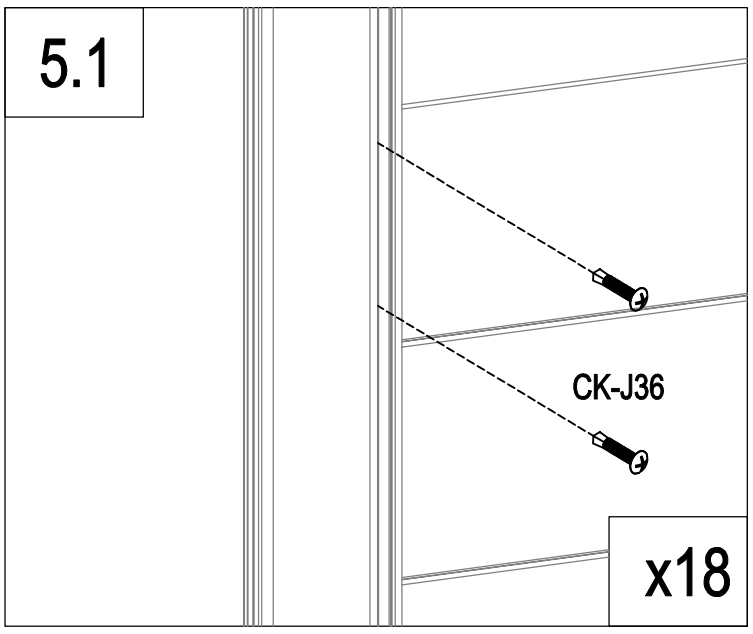

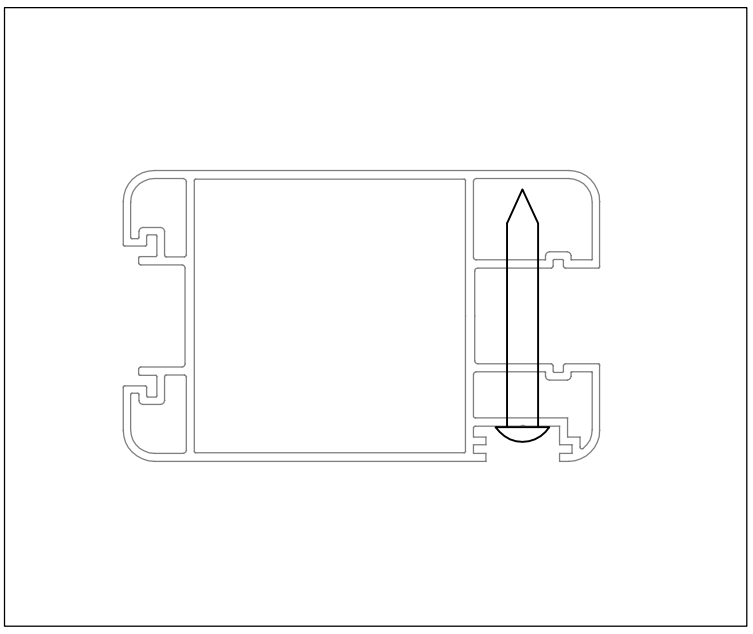

	CK-J36	36

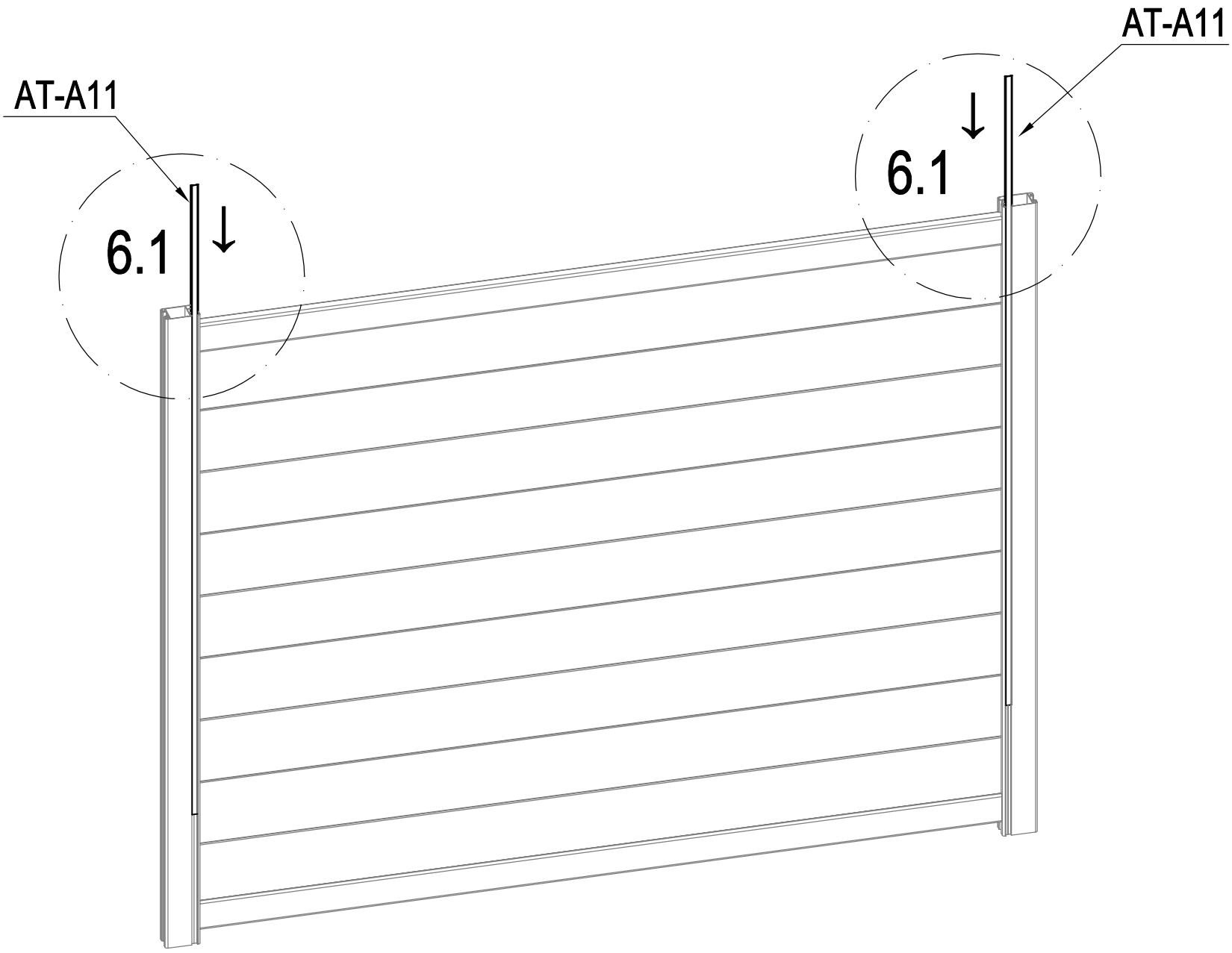

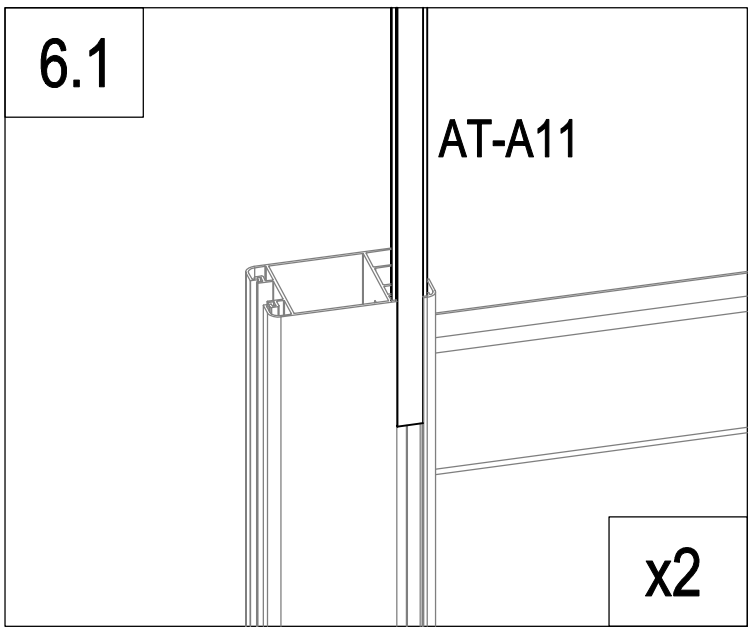

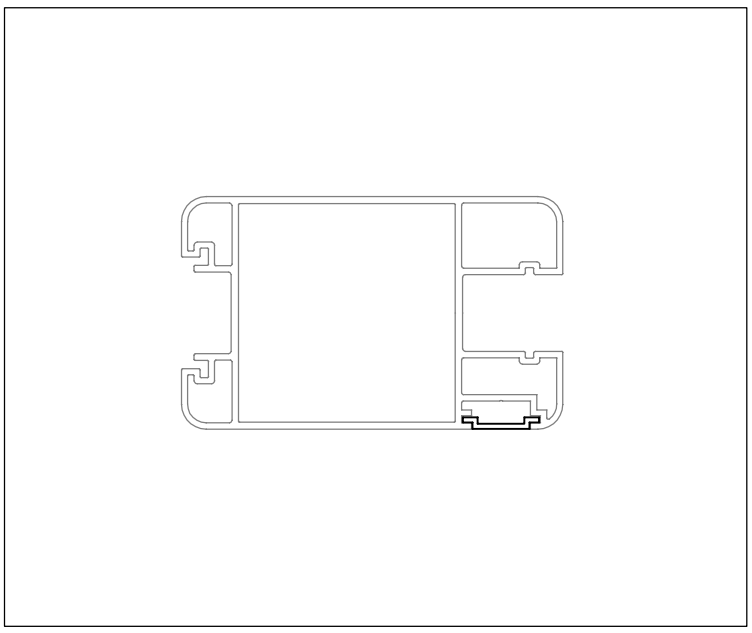

	AT-A11	2

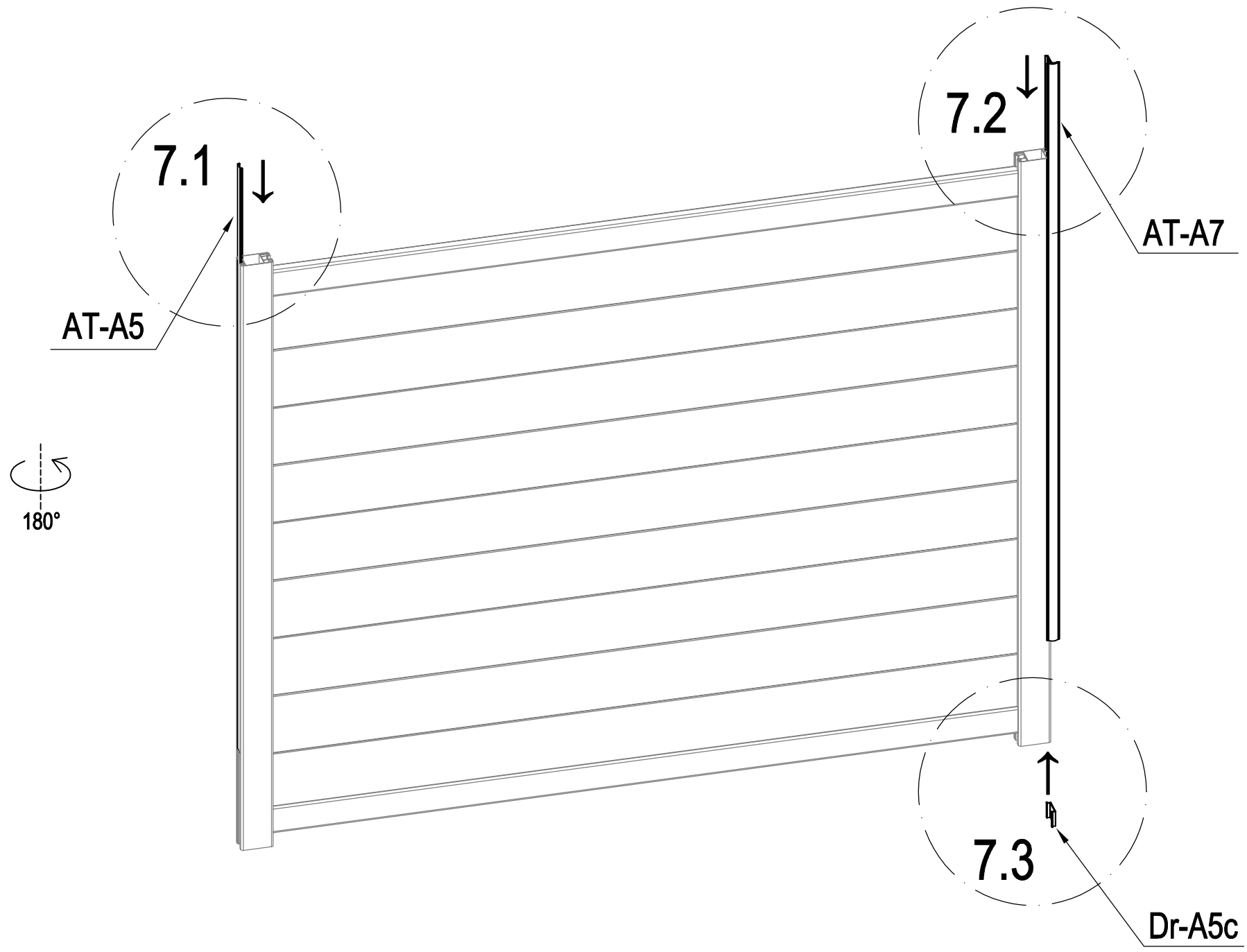

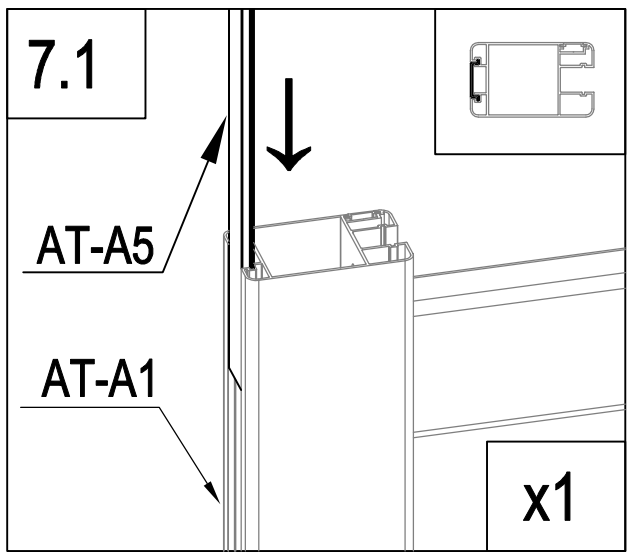

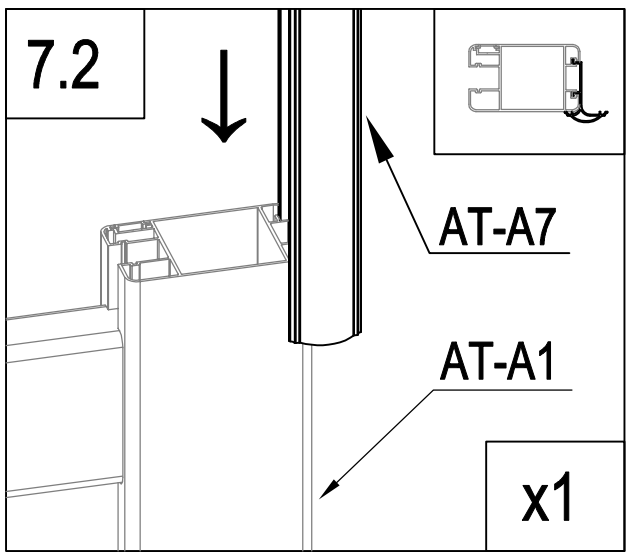

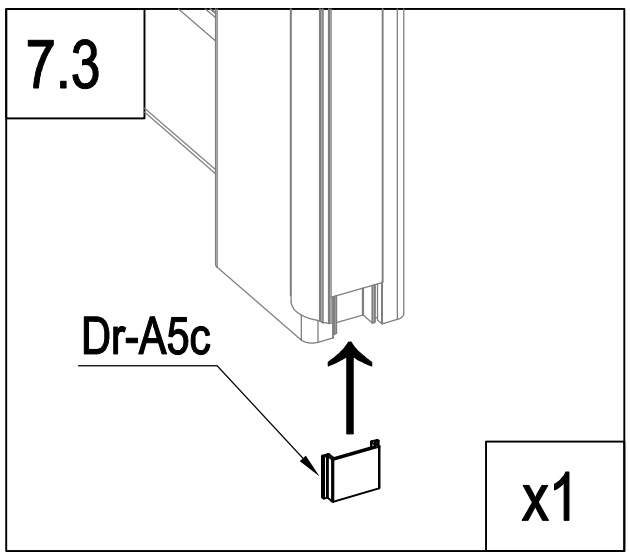

	AT-A5	1
	Dr-A5c	1
	AT-A7	1

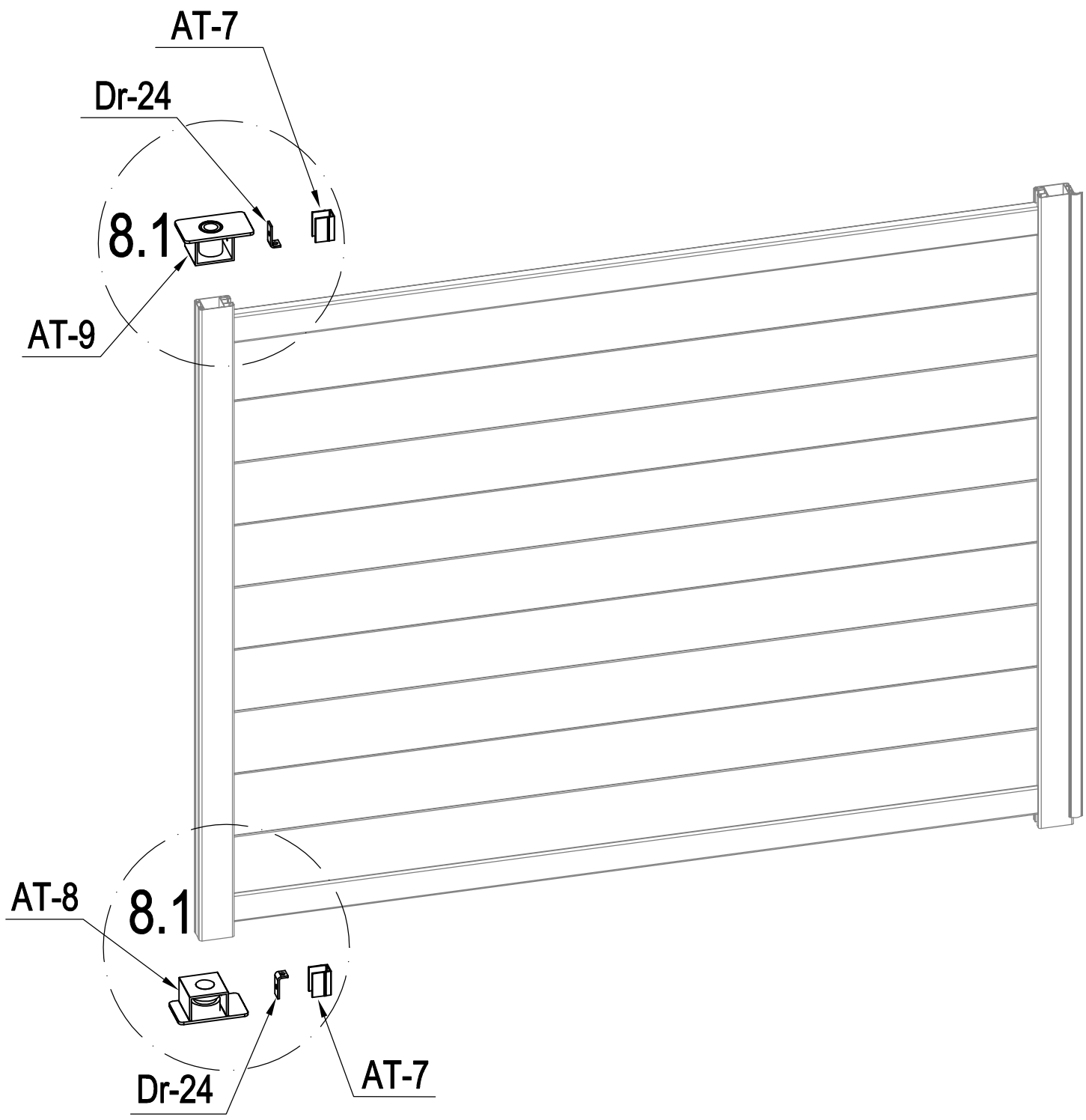

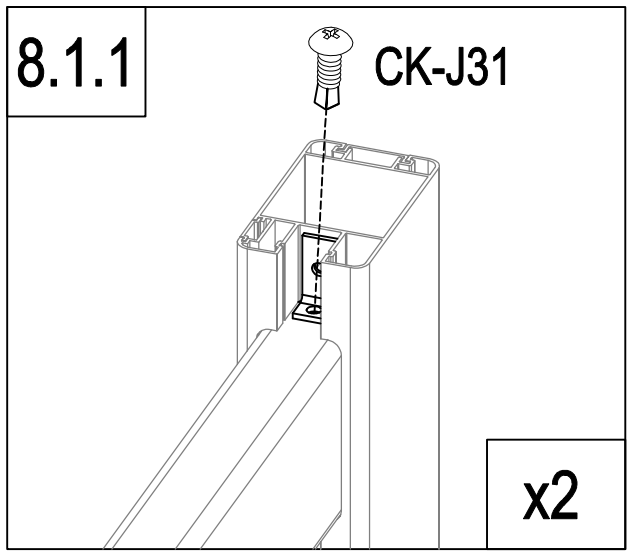

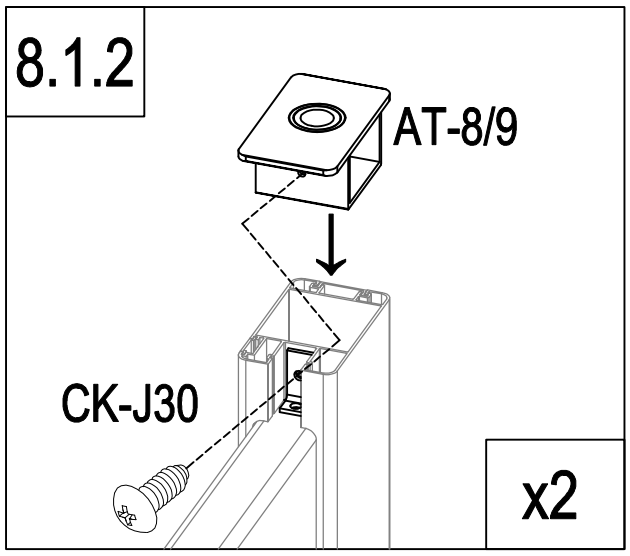

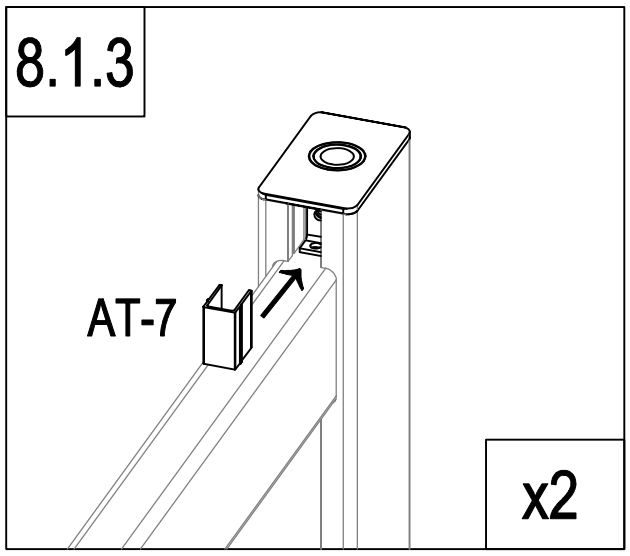

	AT-8	1
	AT-9	1
	Dr-24	2

	AT-7	2
	CK-J30	2
	CK-J31	2

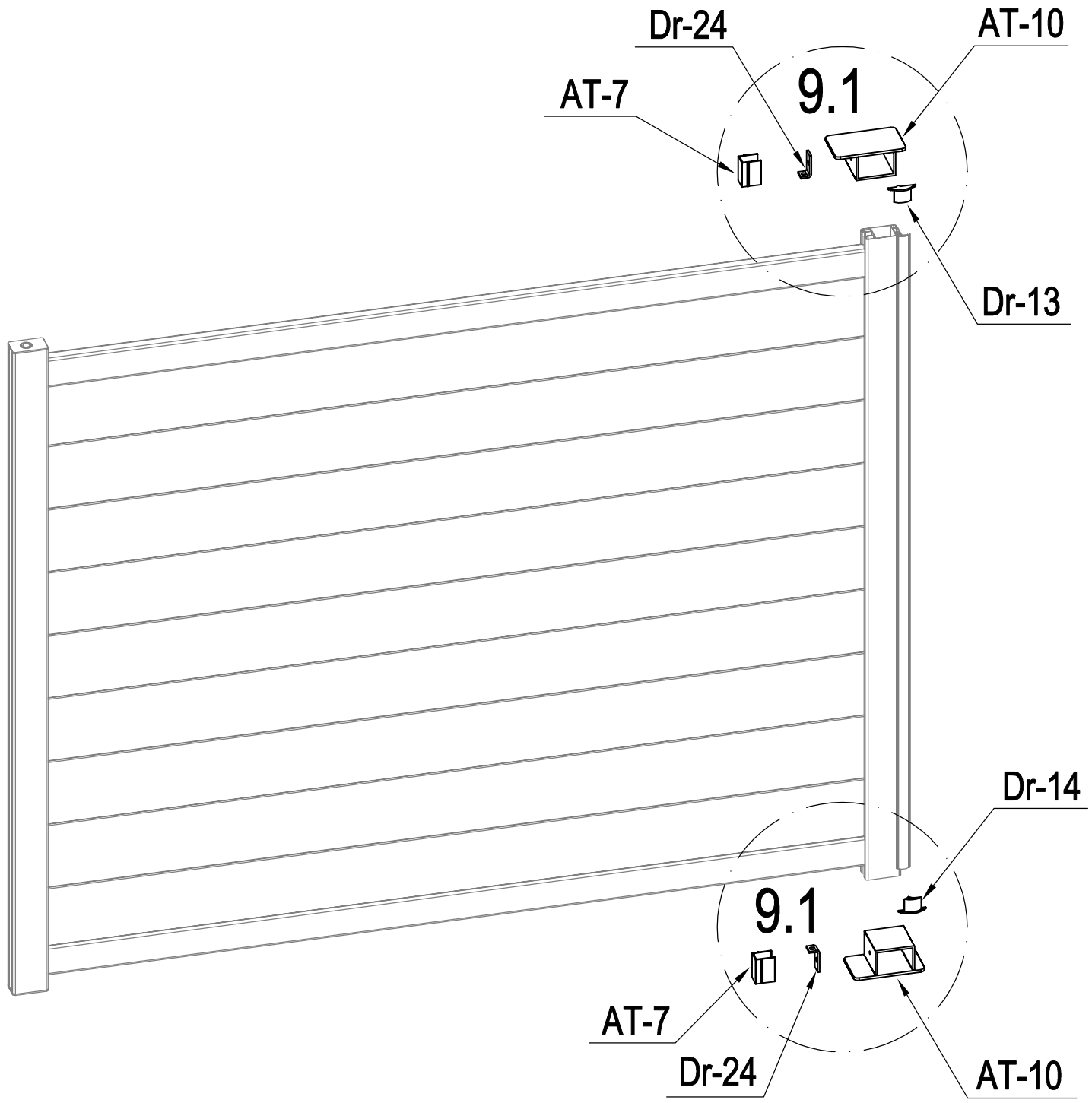

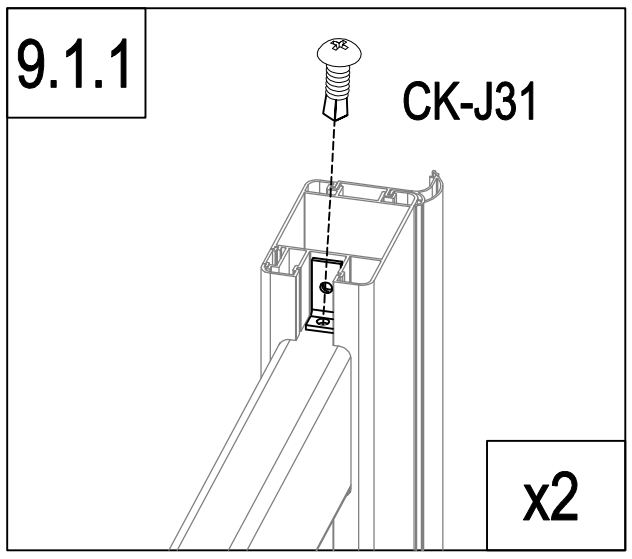

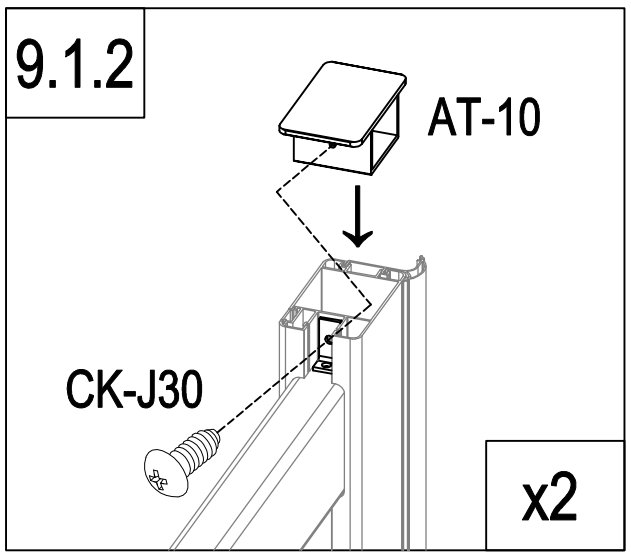

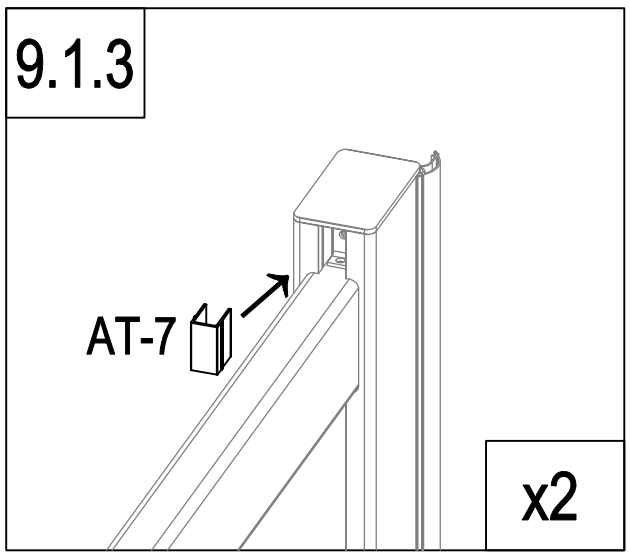

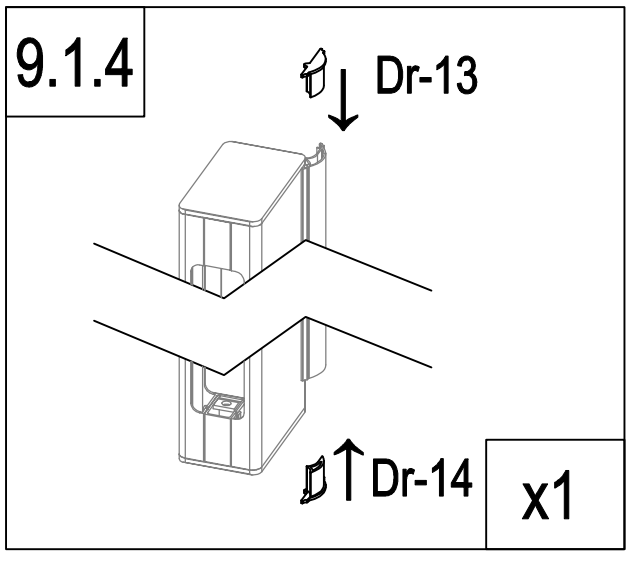

	AT-10	2
	Dr-24	2
	AT-7	2
	Dr-13	1

	Dr-14	1
	CK-J30	2
	CK-J31	2

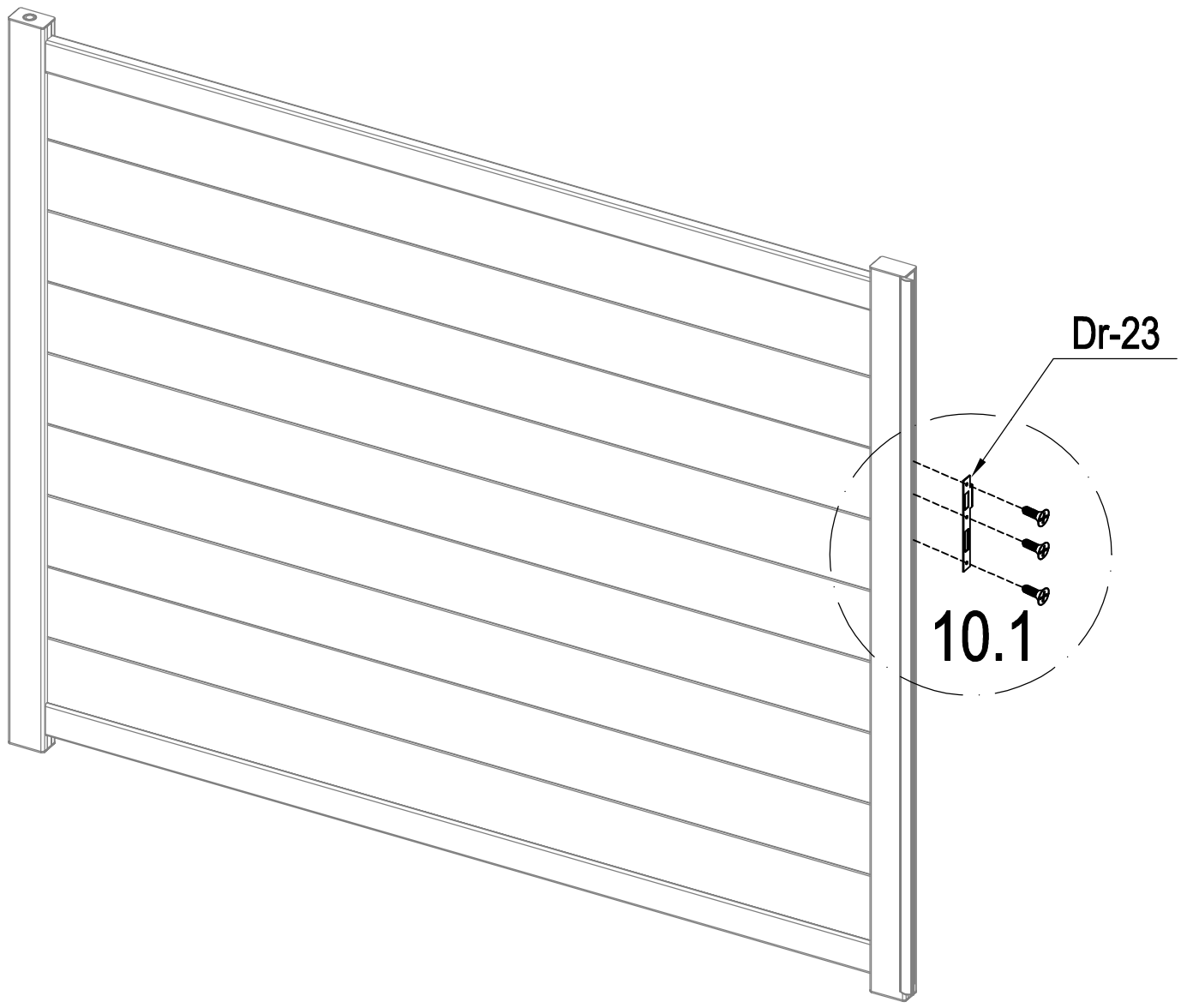

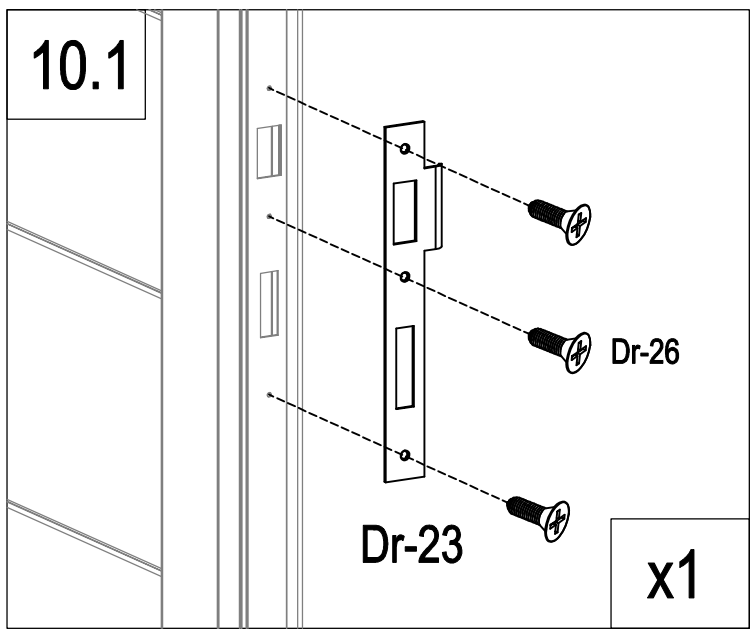

	Dr-23	1
	Dr-26	3

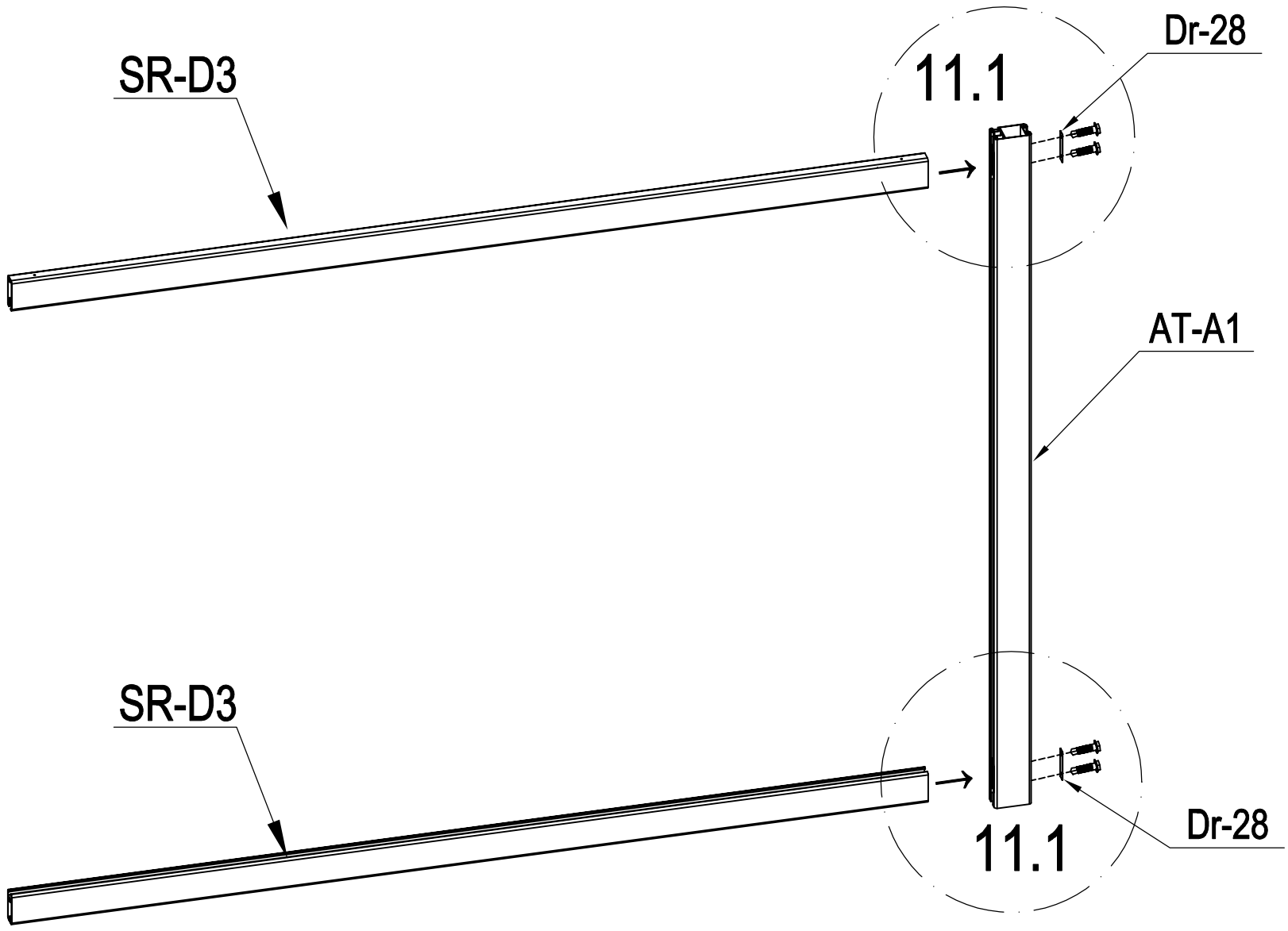

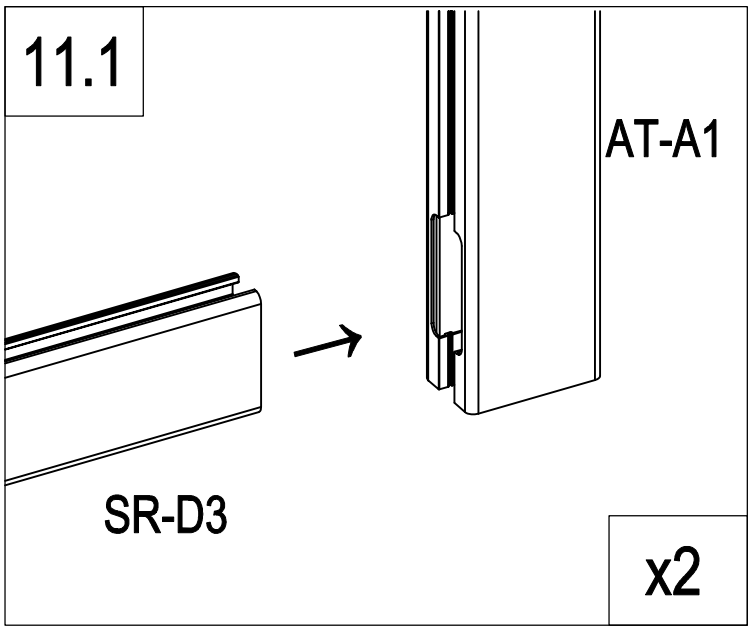

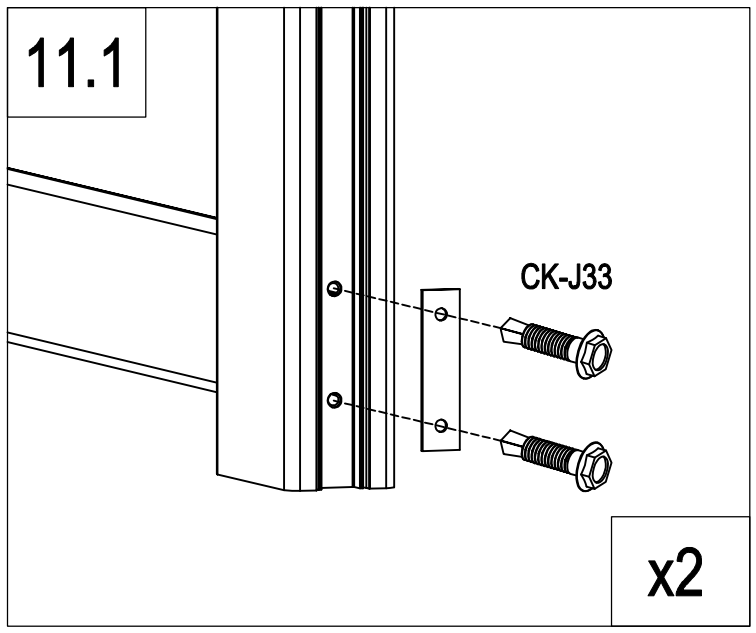

	AT-A1	1
	SR-D3	2
	Dr-28	2
	CK-J33	4

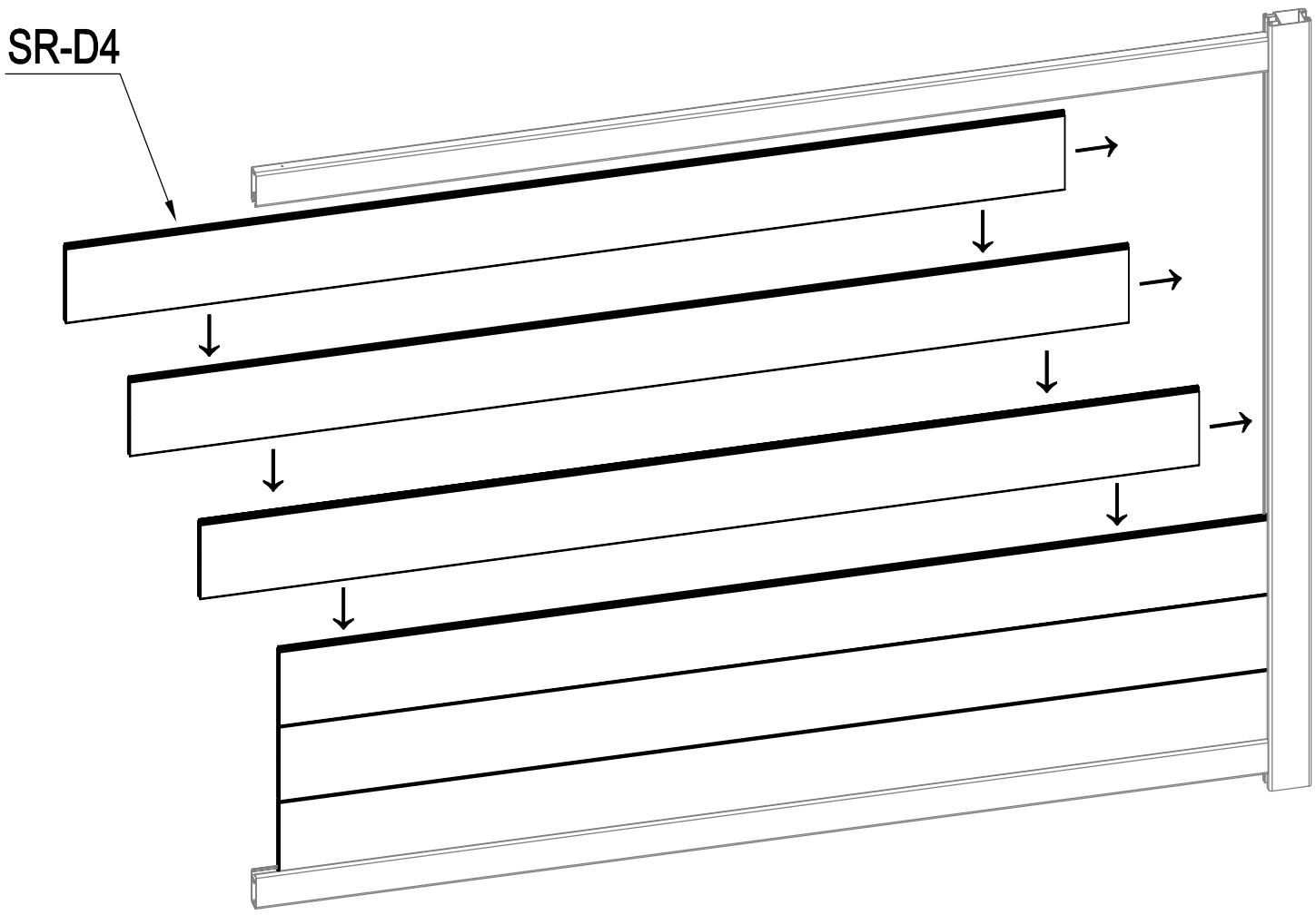

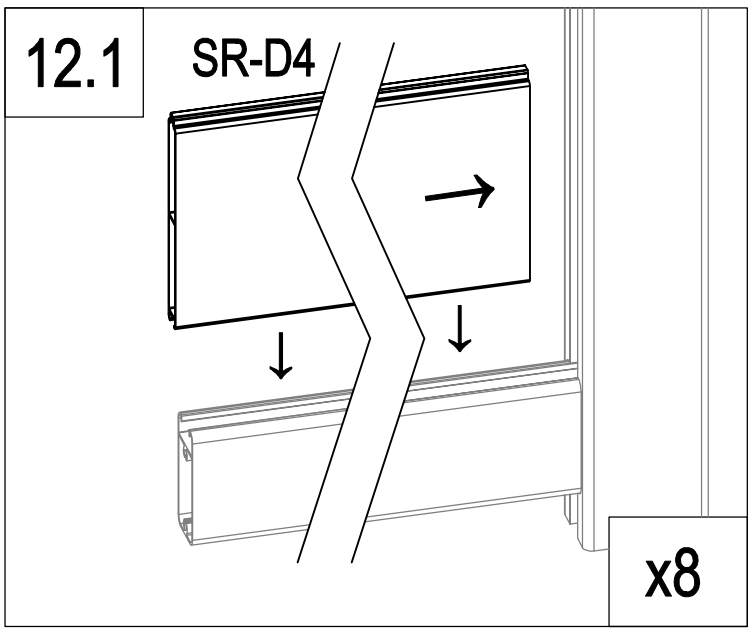

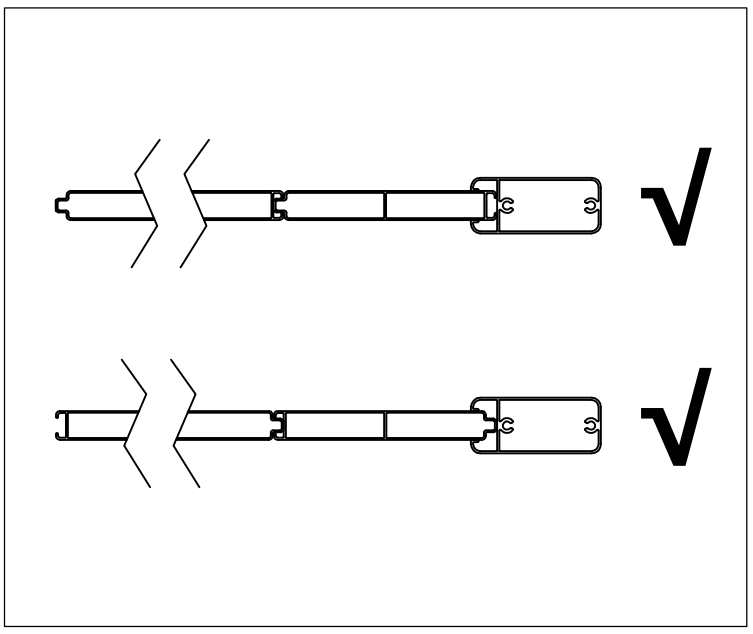

	SR-D4	8

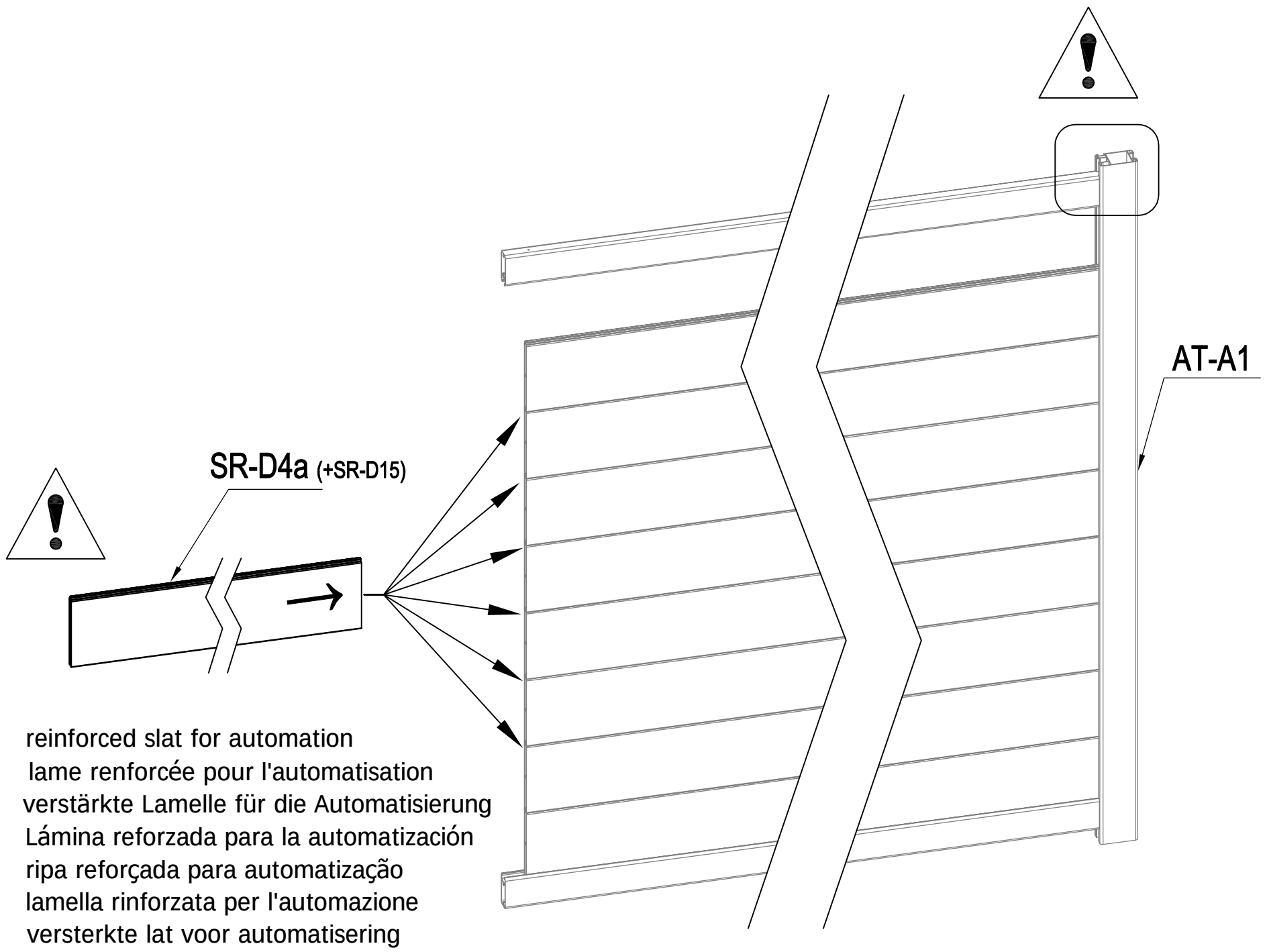

EN: reinforced slat for automation
FR: lame renforcée pour l'automatisation
DE: verstärkte Lamelle für die Automatisierung
ES: Lámina reforzada para la automatización
PT: ripa reforçada para automatização
IT: lamella rinforzata per l'automazione
NL: versterkte lat voor automatisering
PL: wzmocniona listwa do automatyzacji

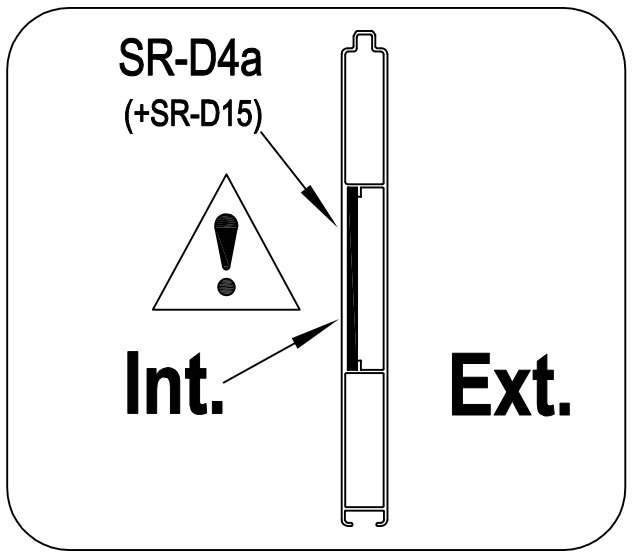

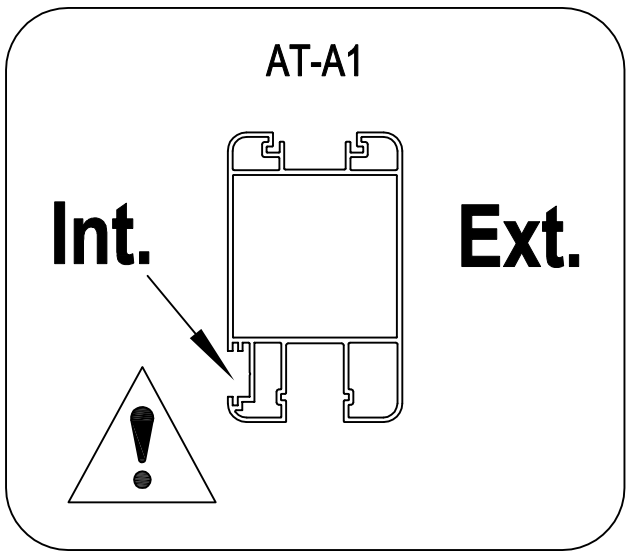

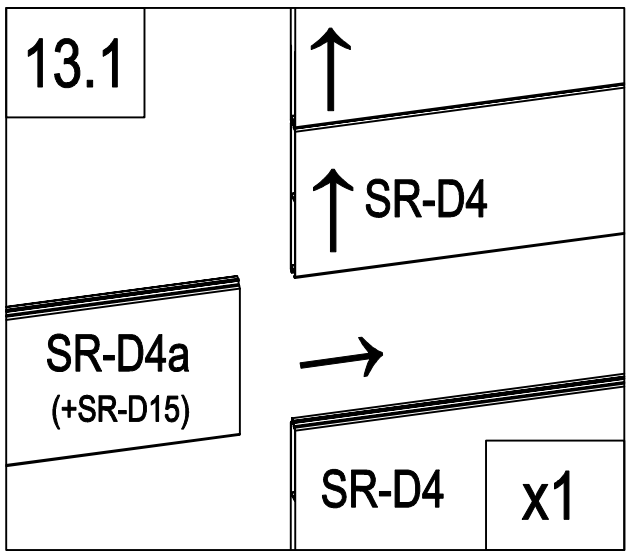

	SR-D4a (+SR-D15)	1

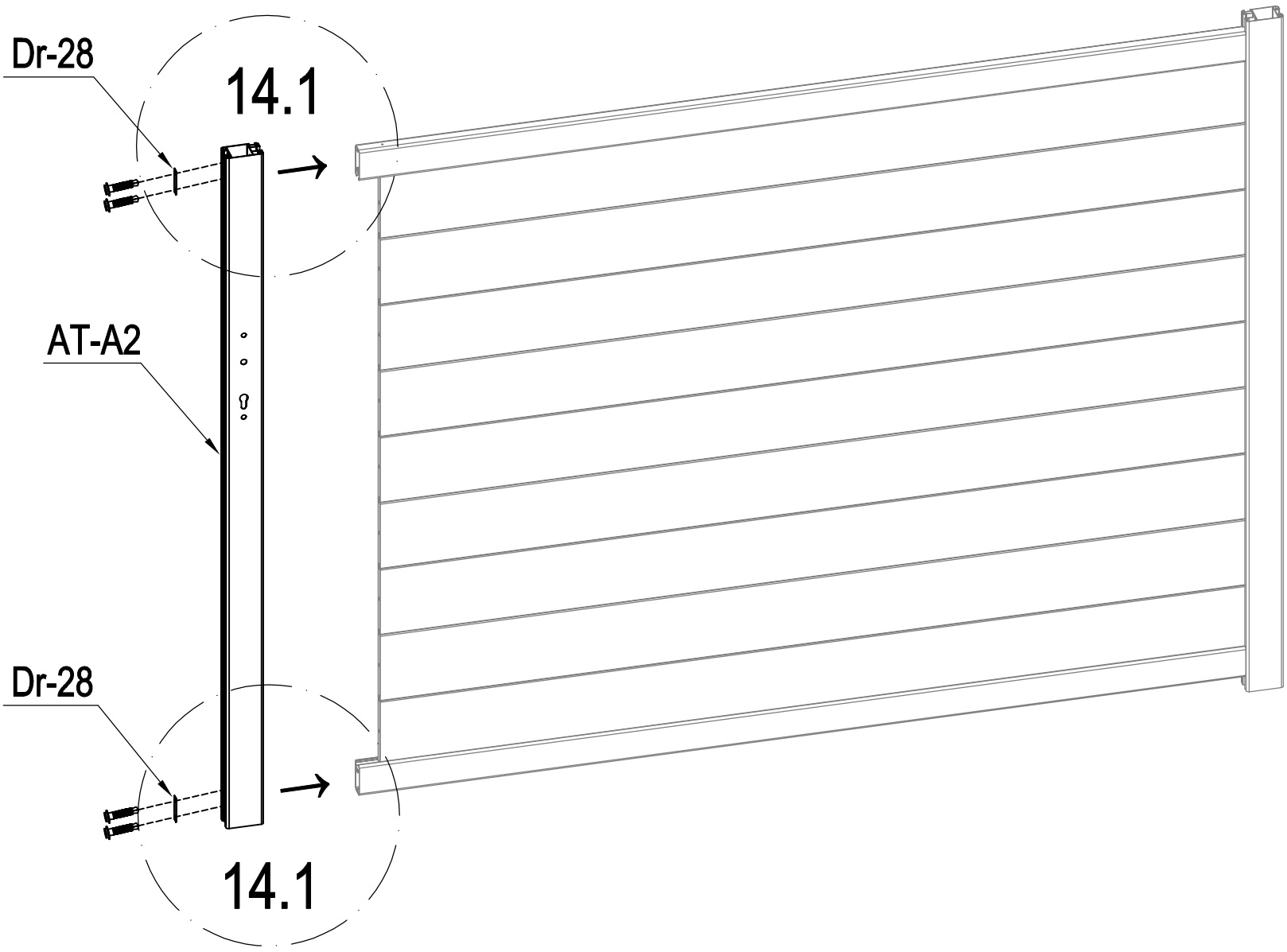

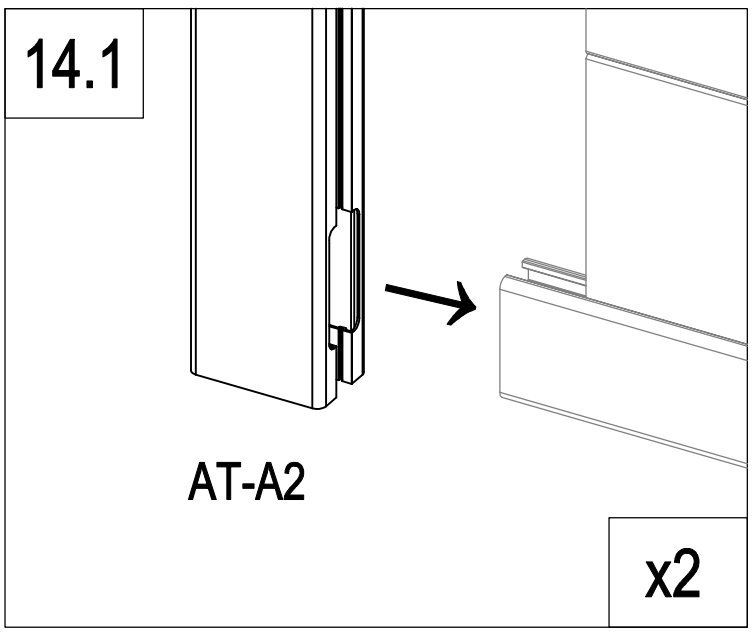

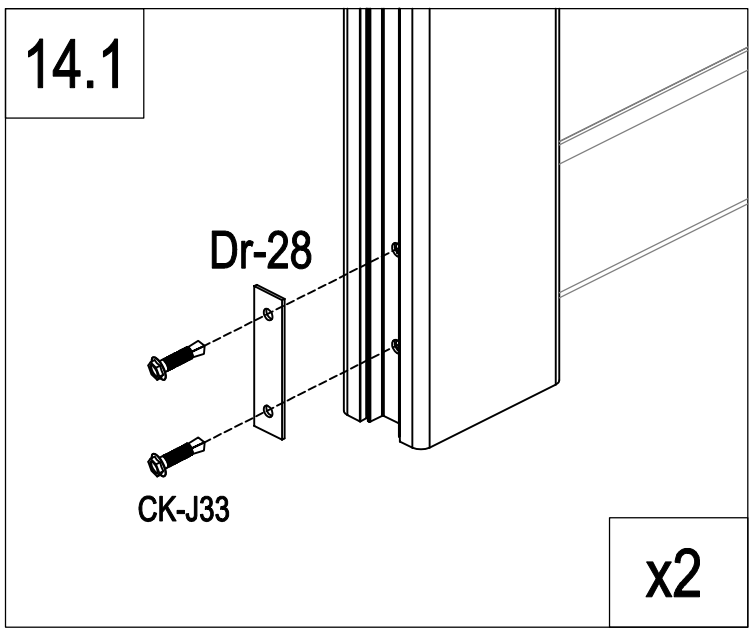

	AT-A2	1
	Dr-28	2
	CK-J33	4

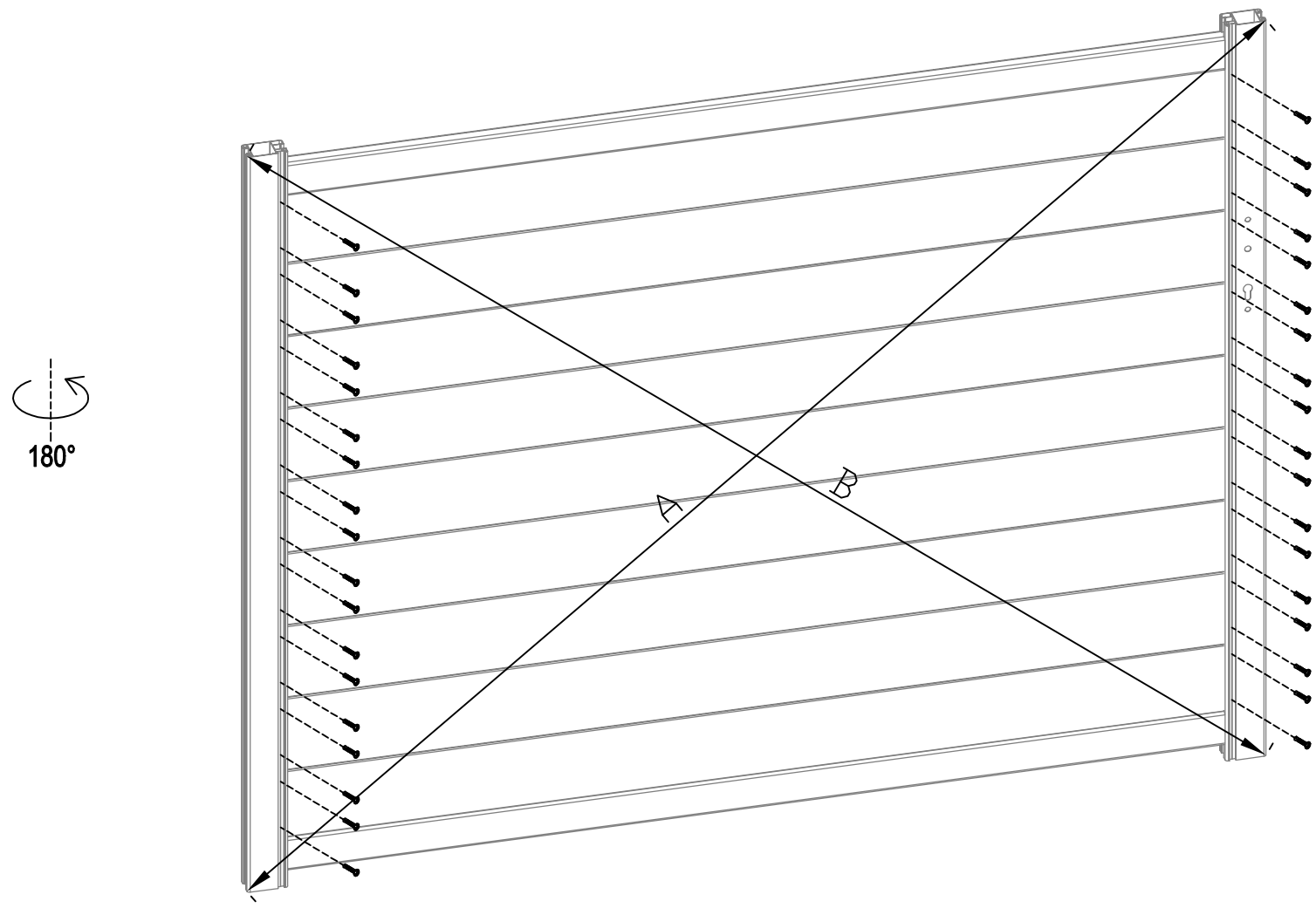

A=B

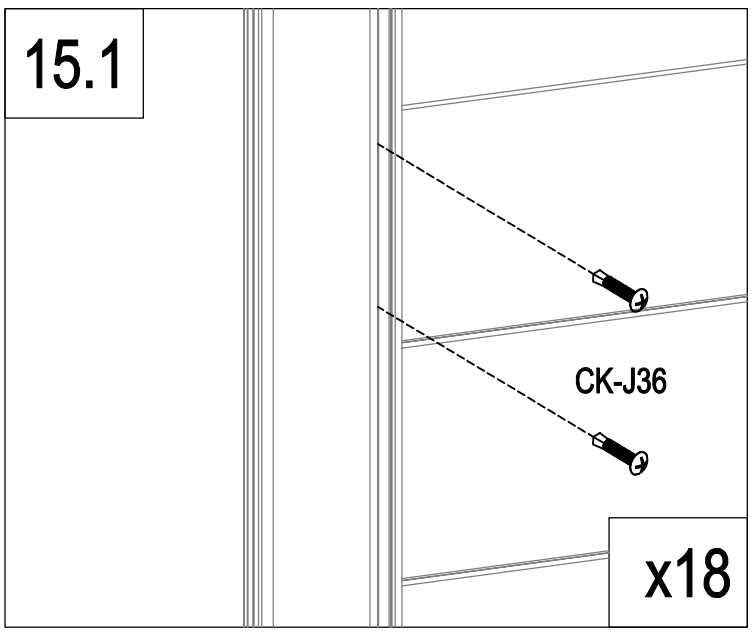

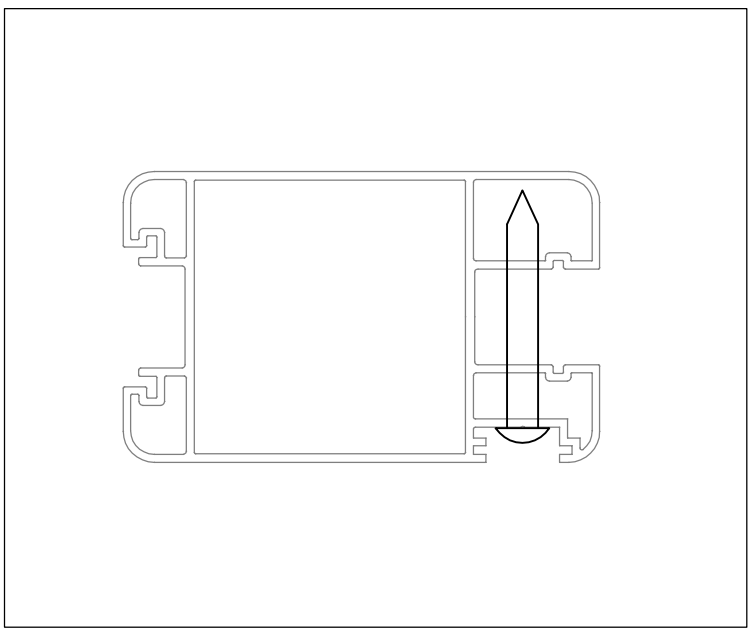

	CK-J36	36

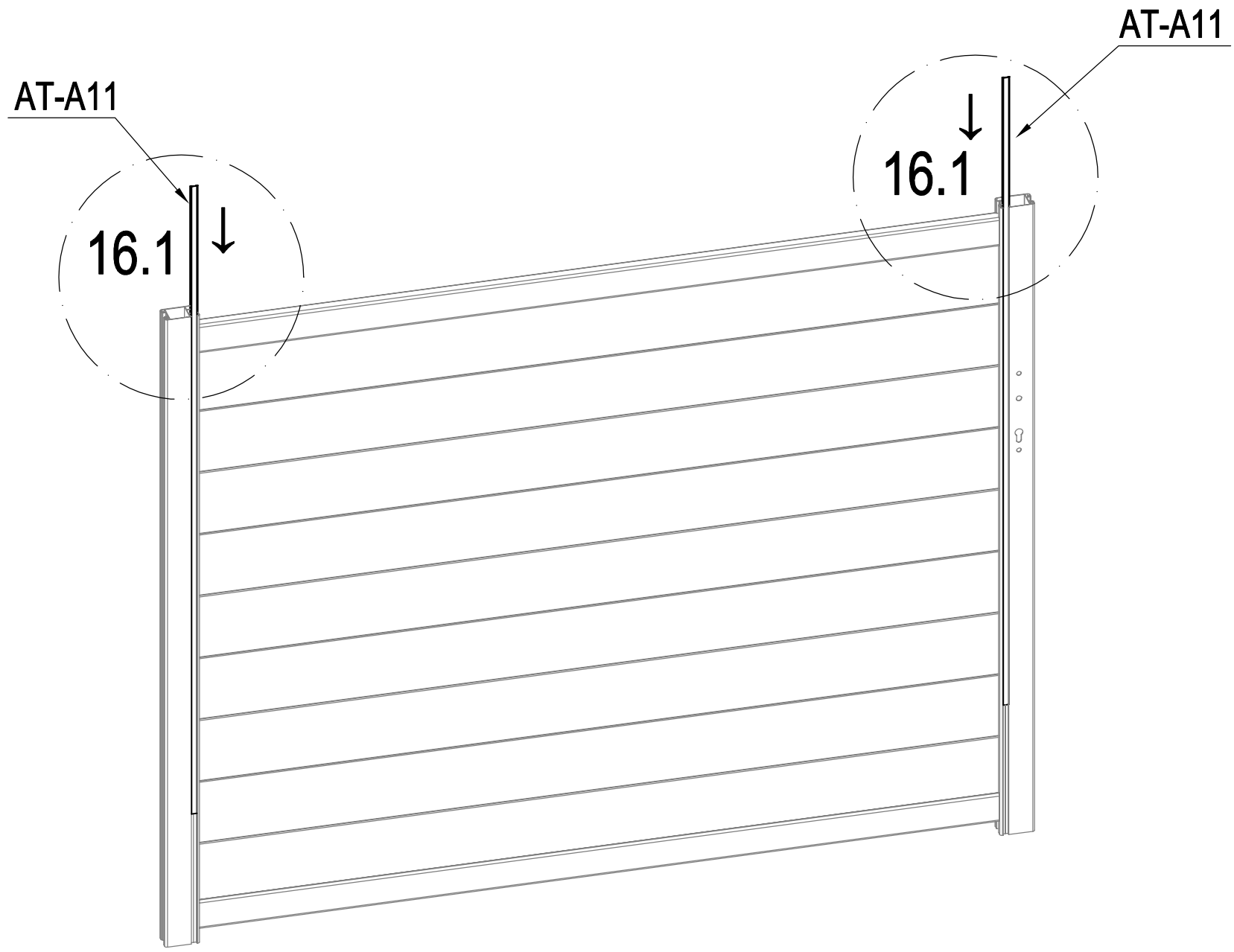

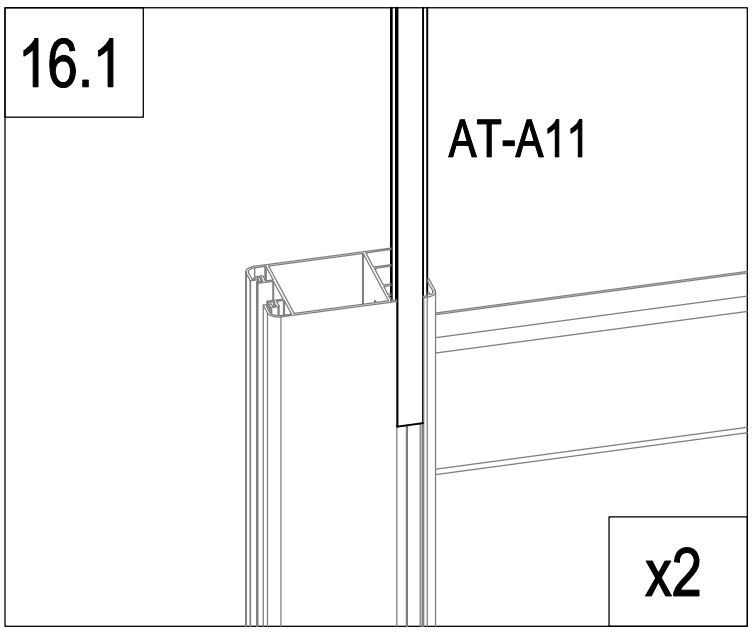

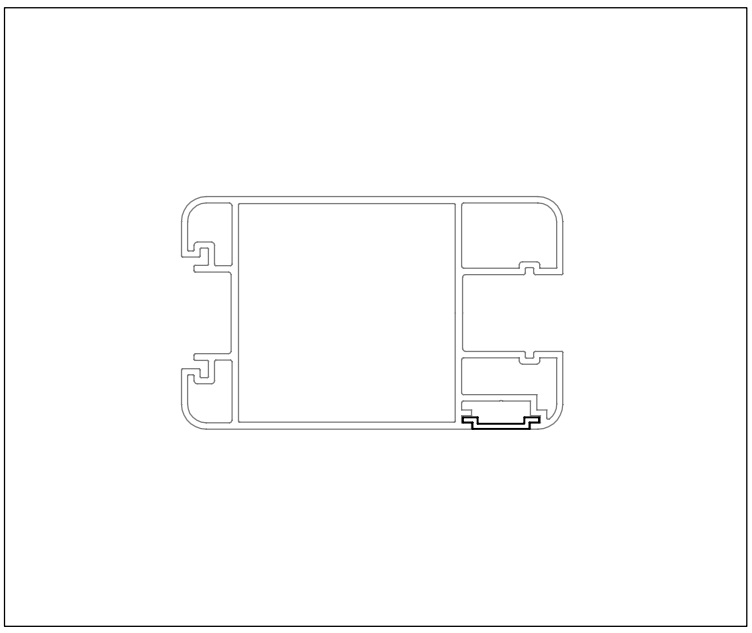

	AT-A11	2

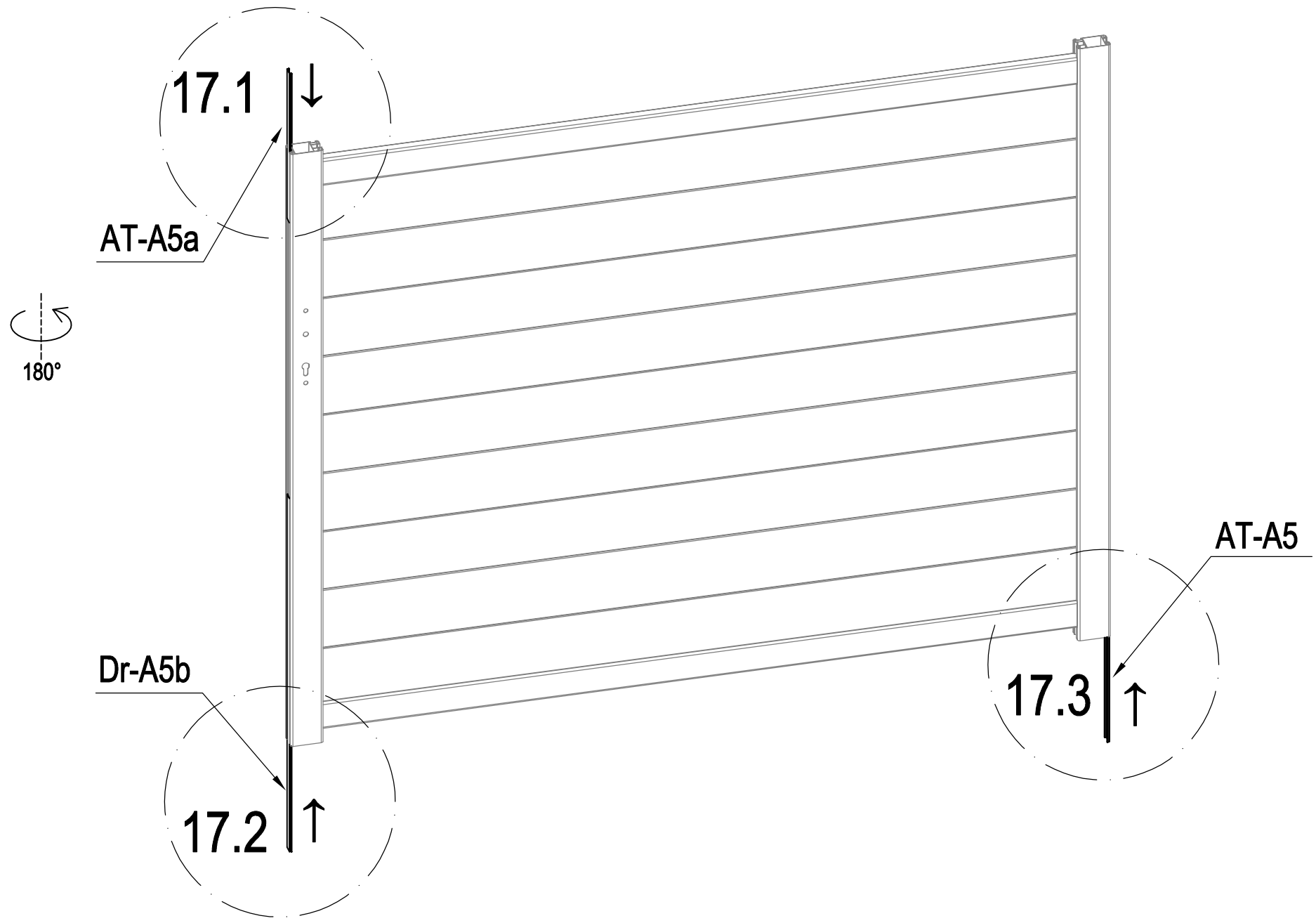

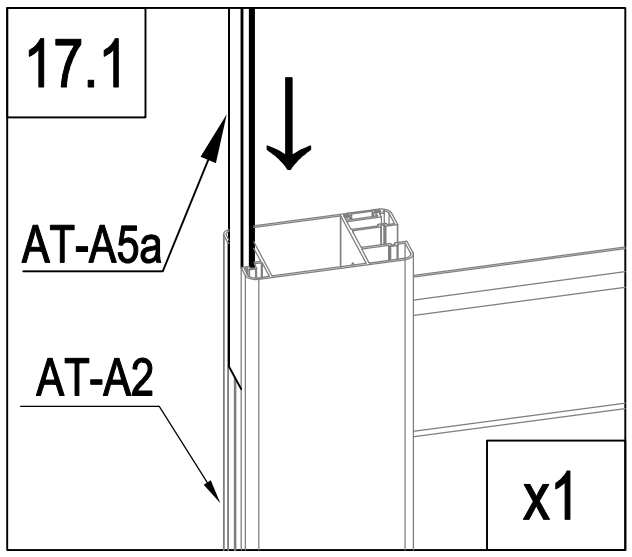

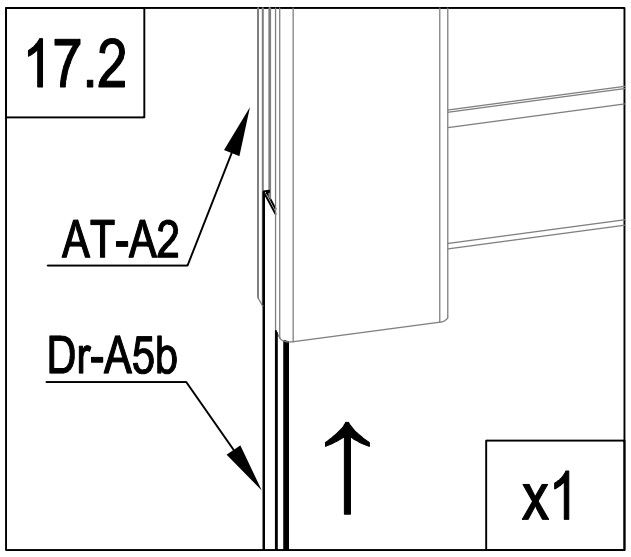

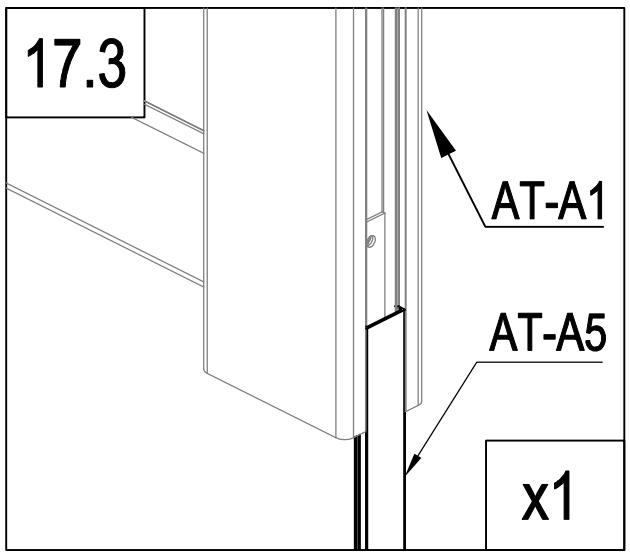

	AT-A5	1
	AT-A5a	1
	Dr-A5b	1

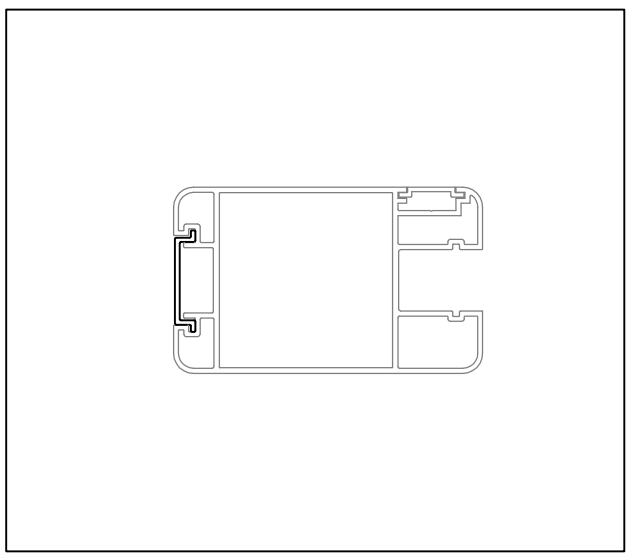

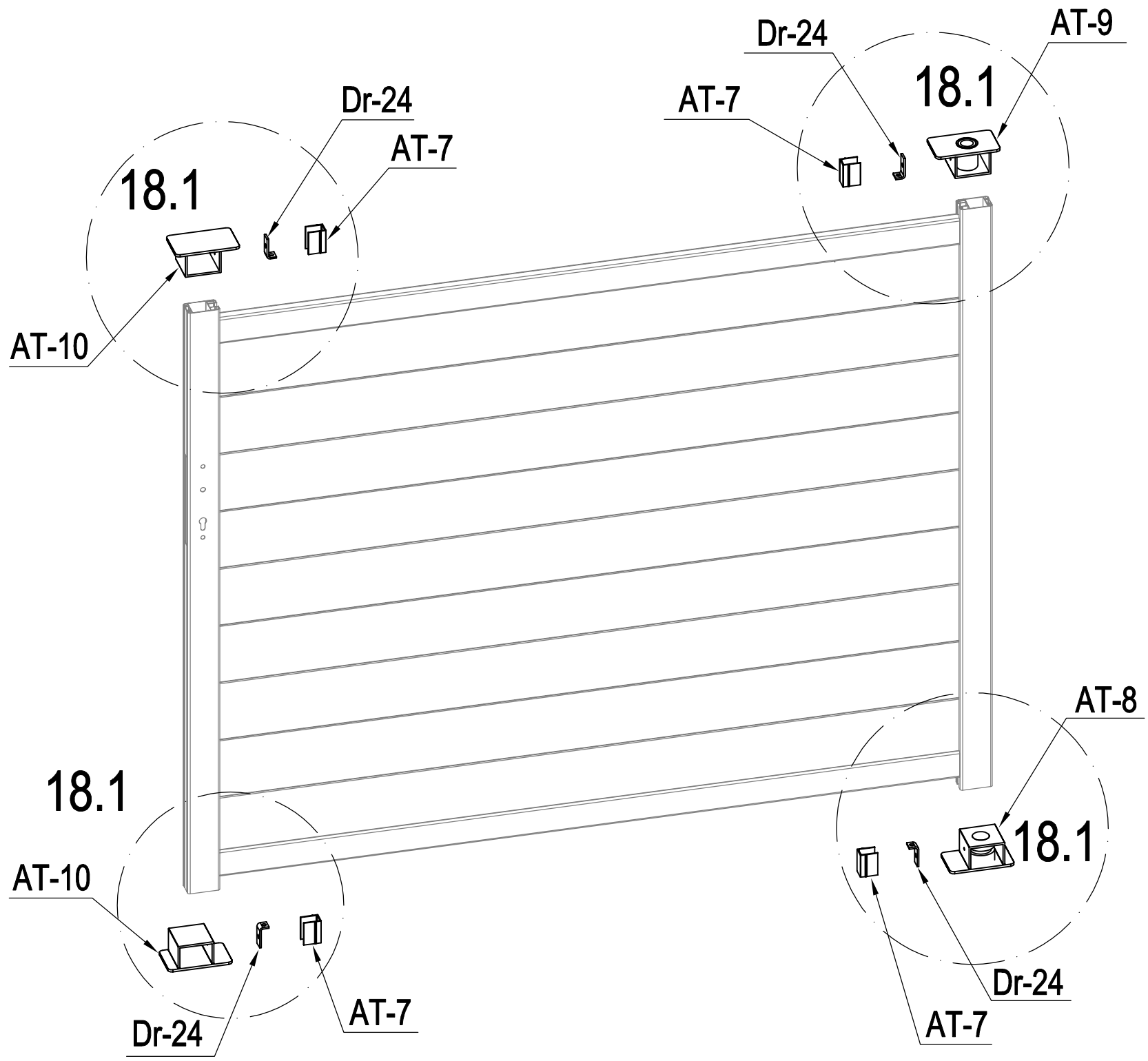

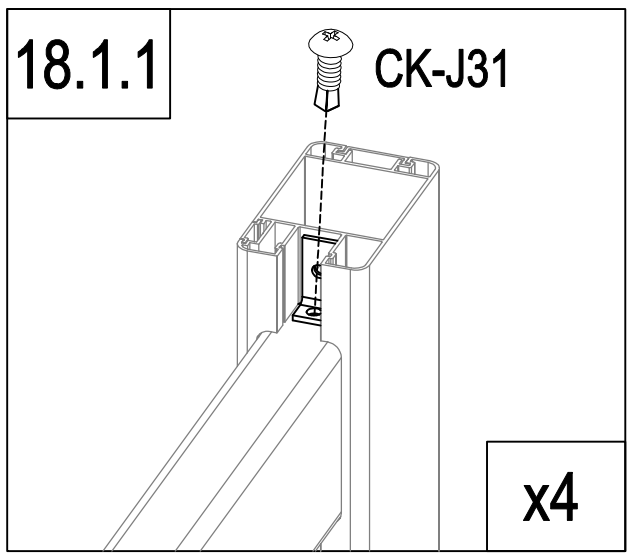

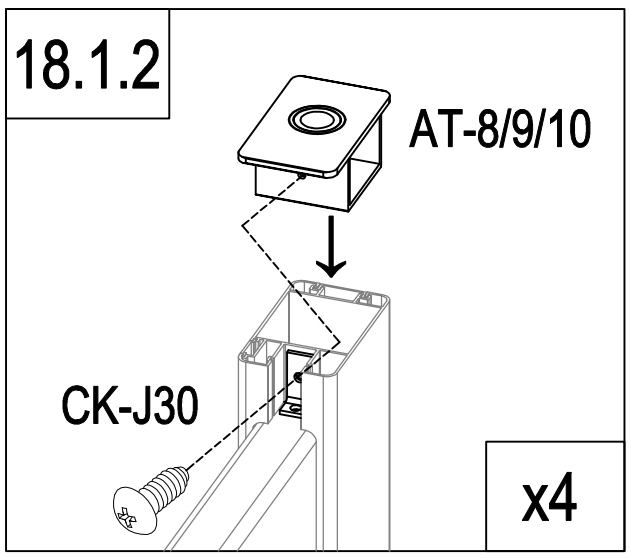

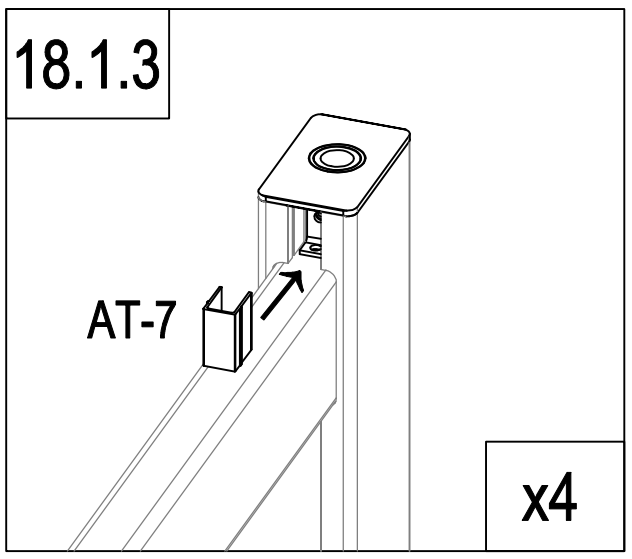

	AT-8	1
	AT-9	1
	AT-10	2
	Dr-24	4

	AT-7	4
	CK-J30	4
	CK-J31	4

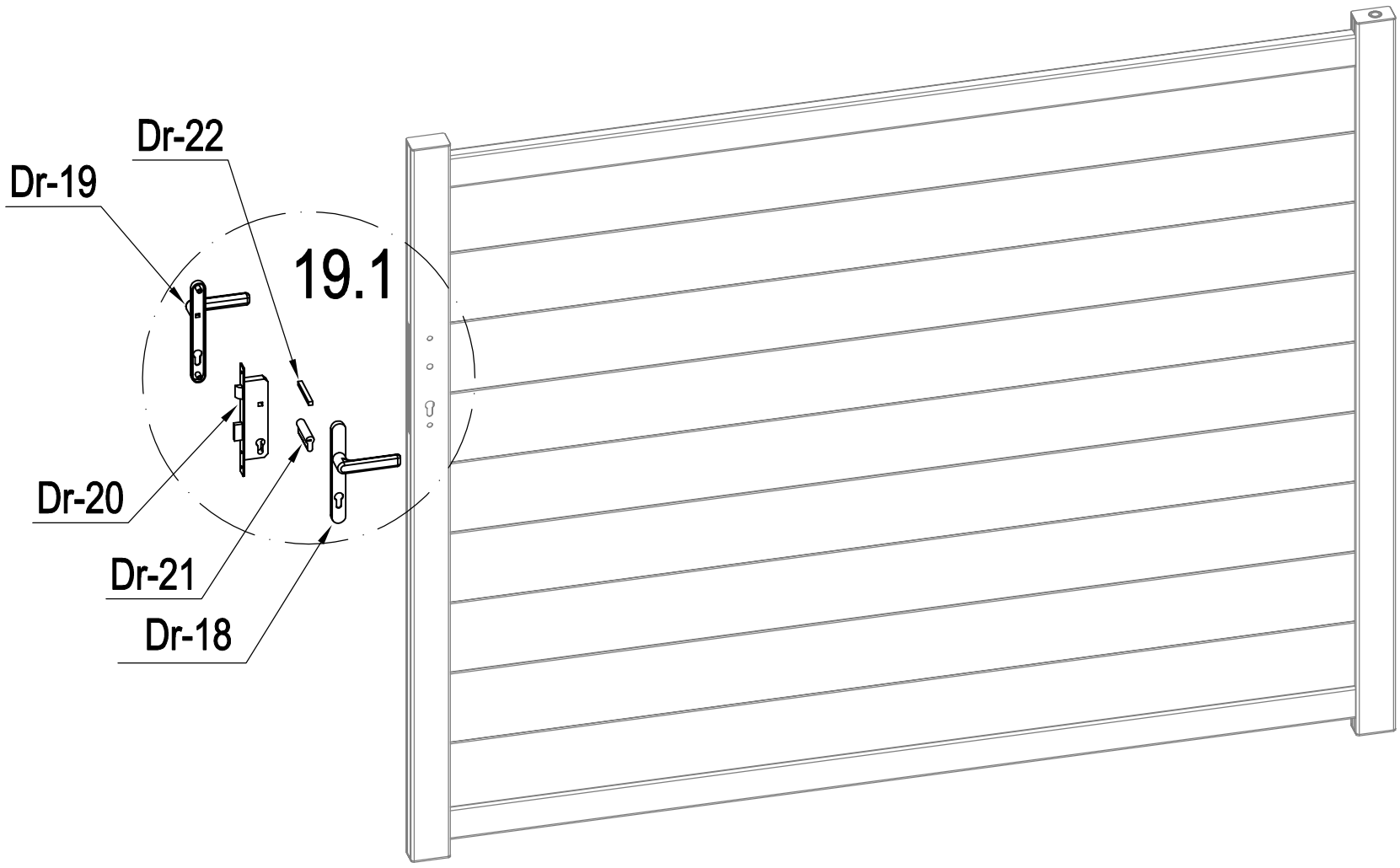

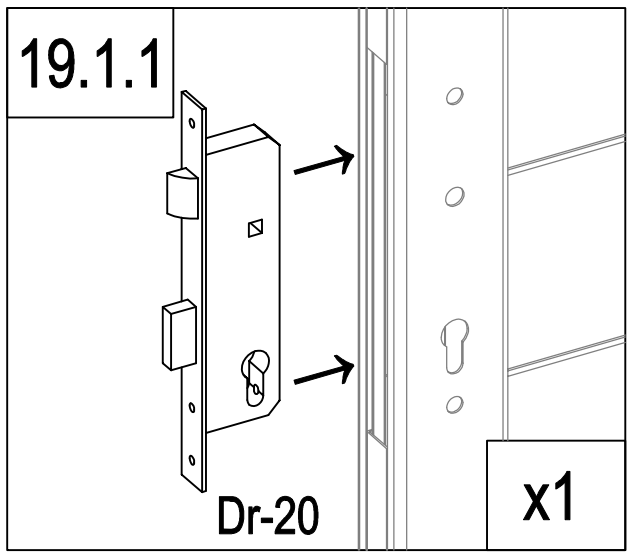

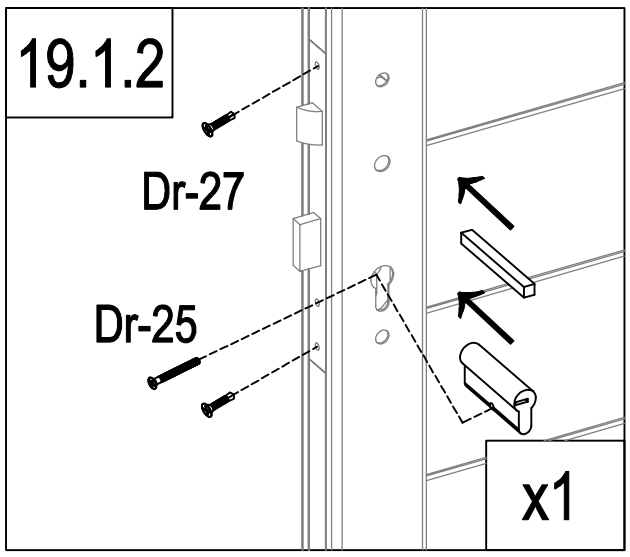

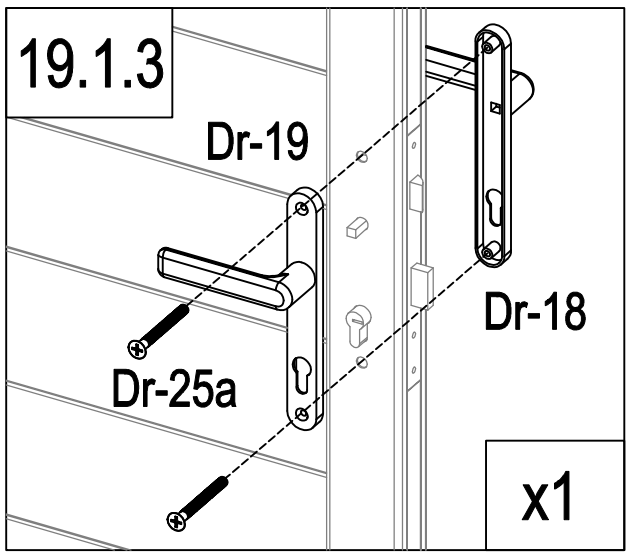

	Dr-20	1
	Dr-21	1
	Dr-22	1
	Dr-25	1

	Dr-18	1
	Dr-19	1
	Dr-25a	2
	Dr-27	2

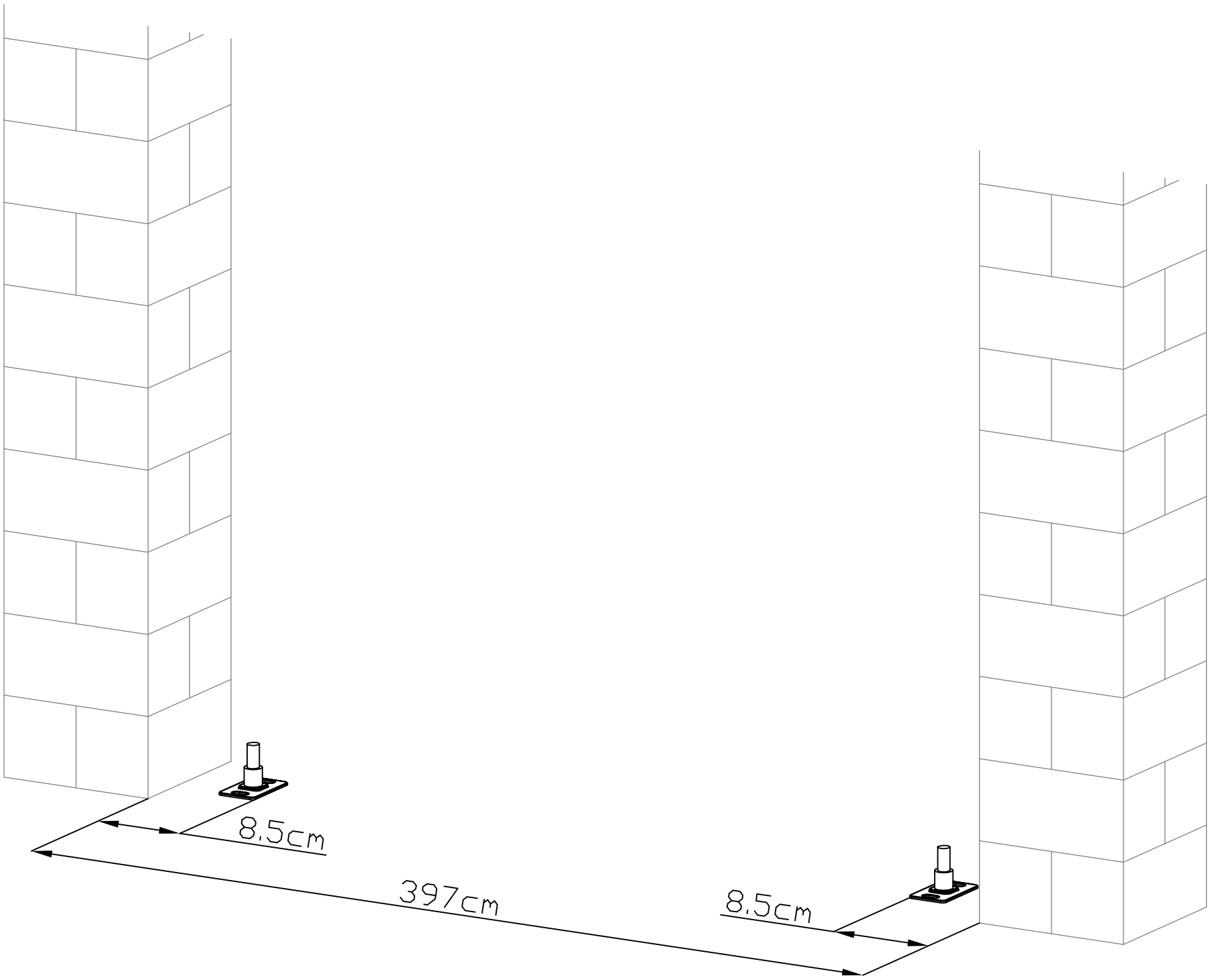

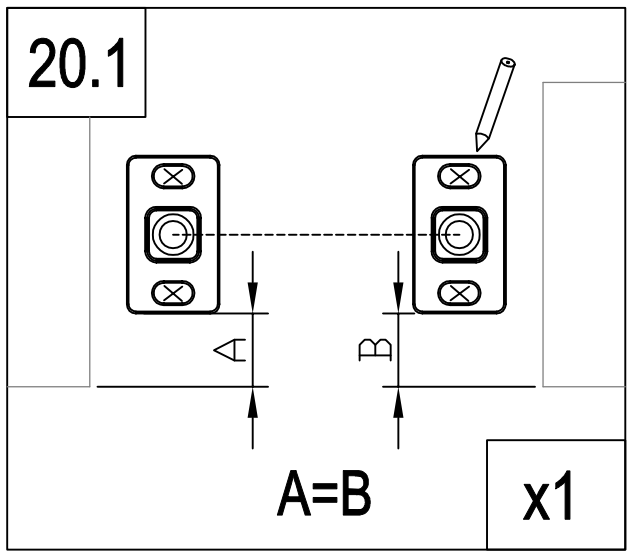

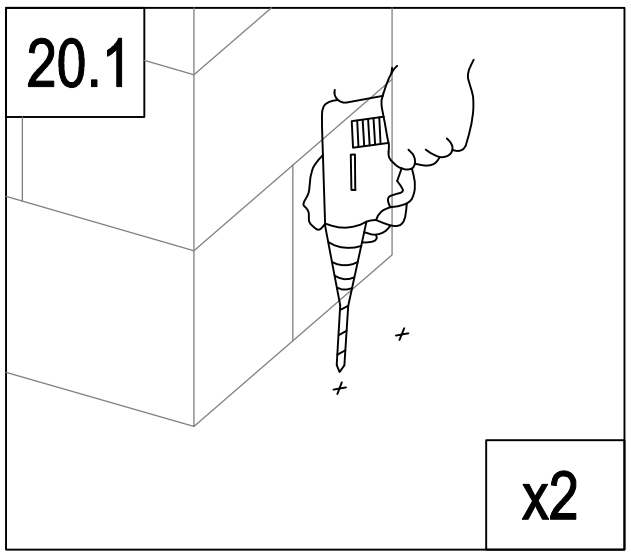

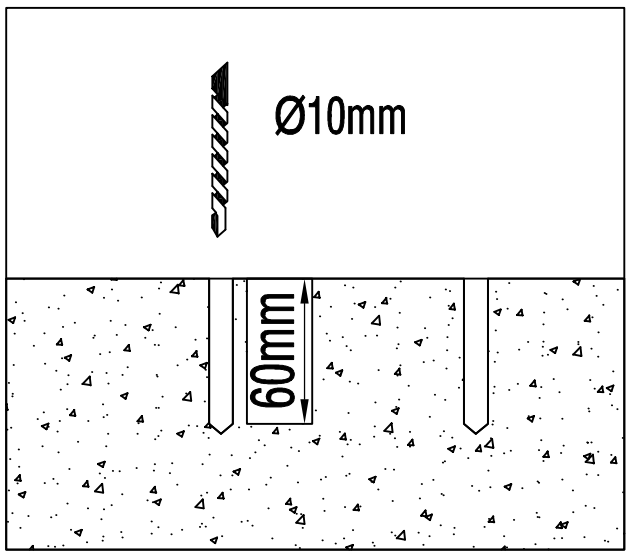

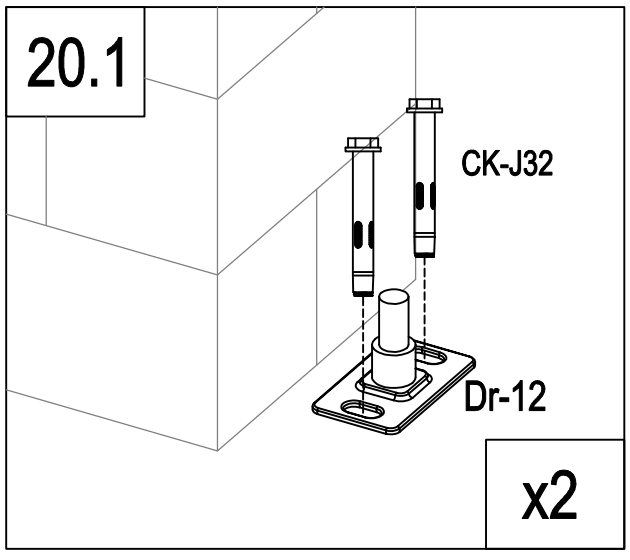

	Dr-12	2
	CK-J32	4

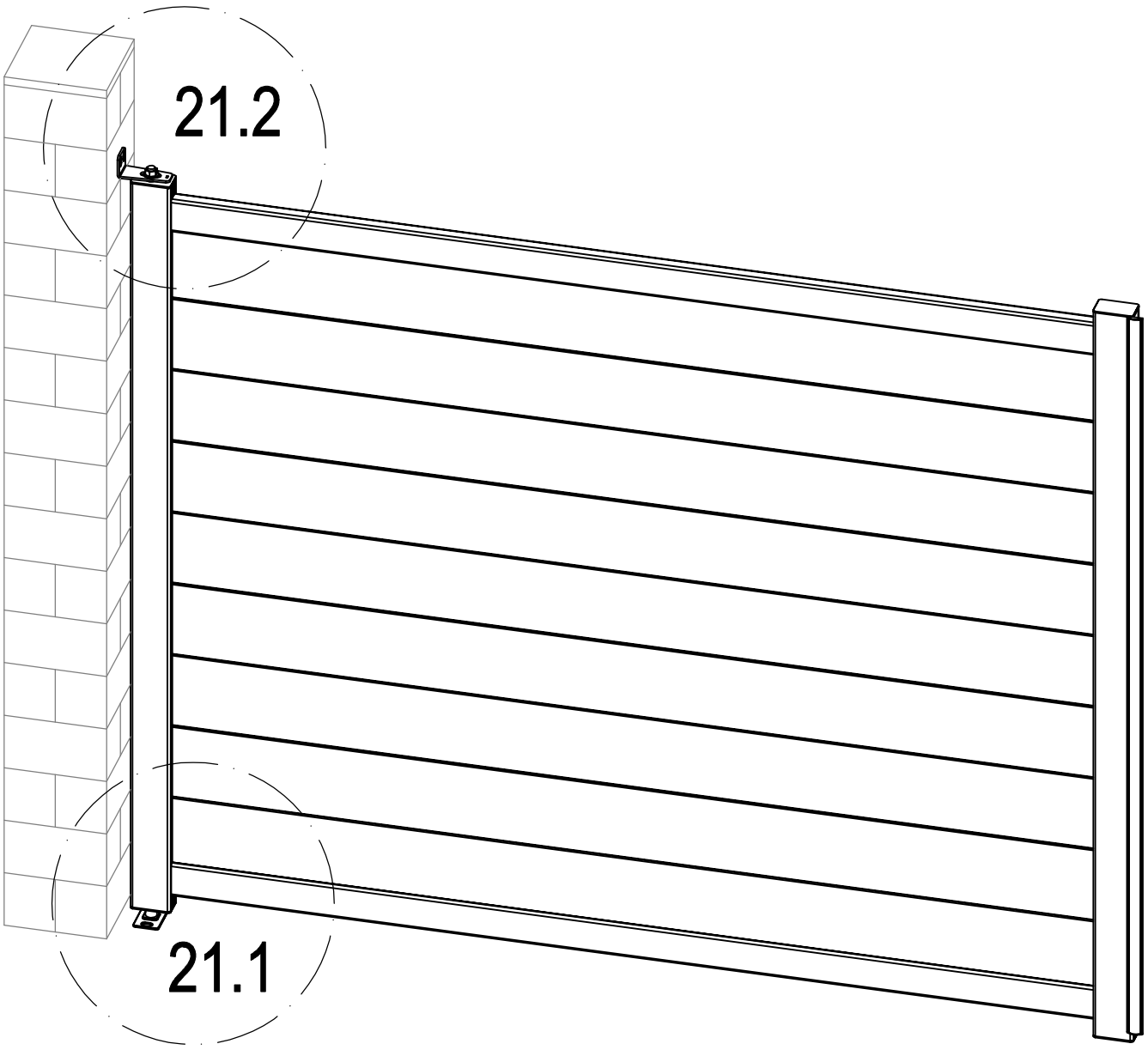

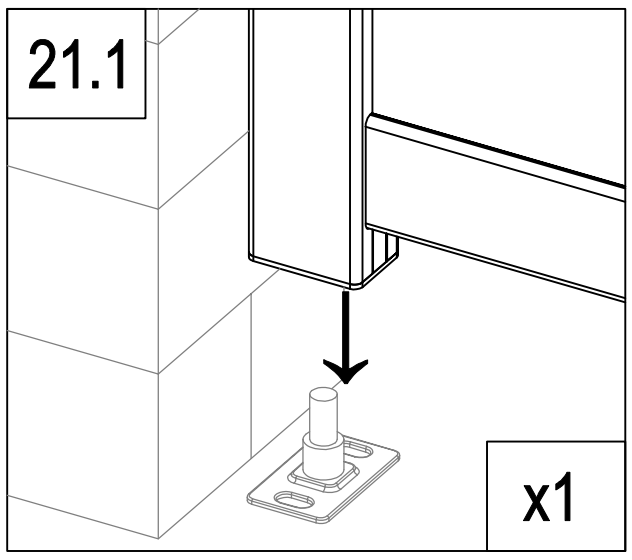

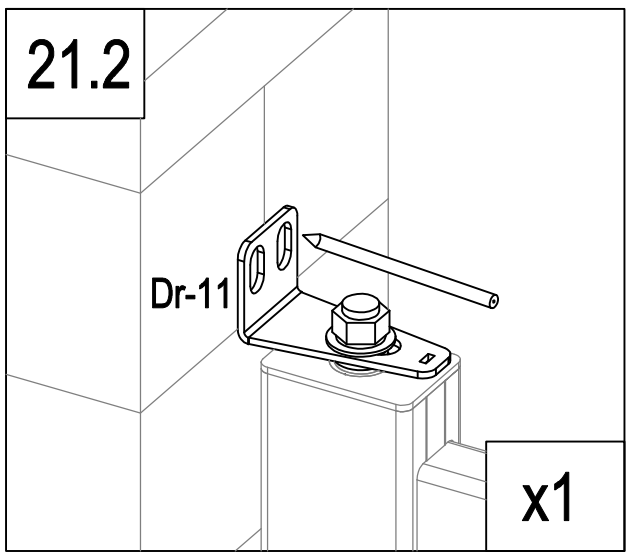

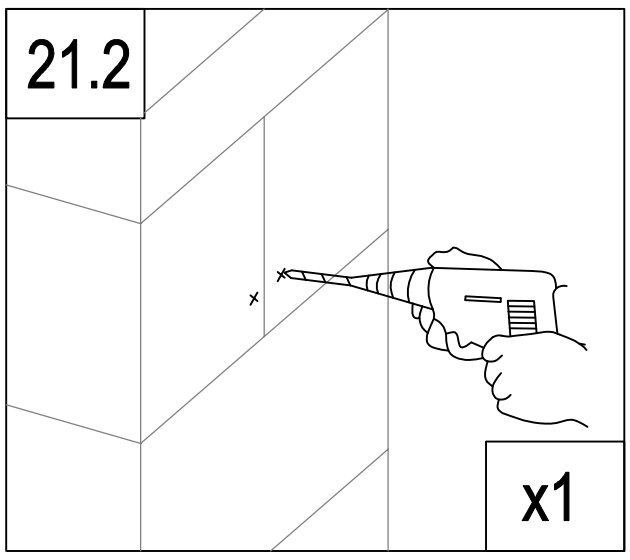

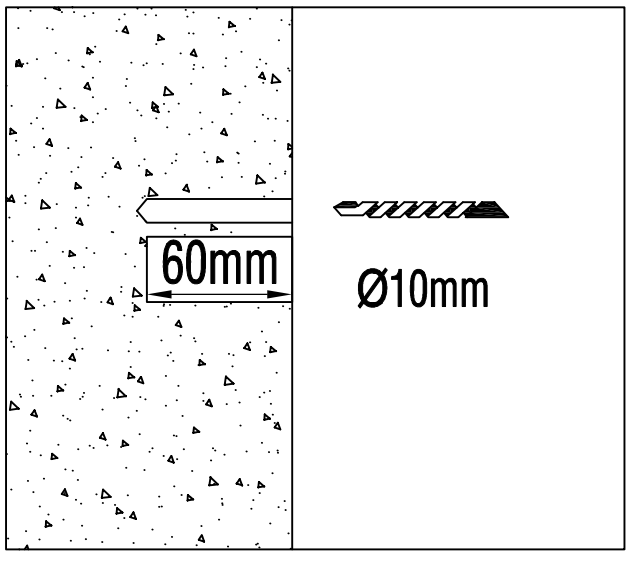

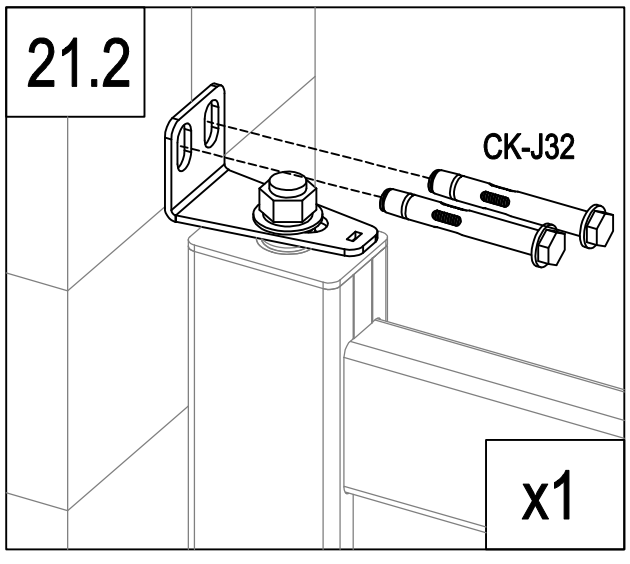

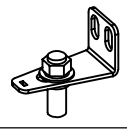	Dr-11	1
	CK-J32	2

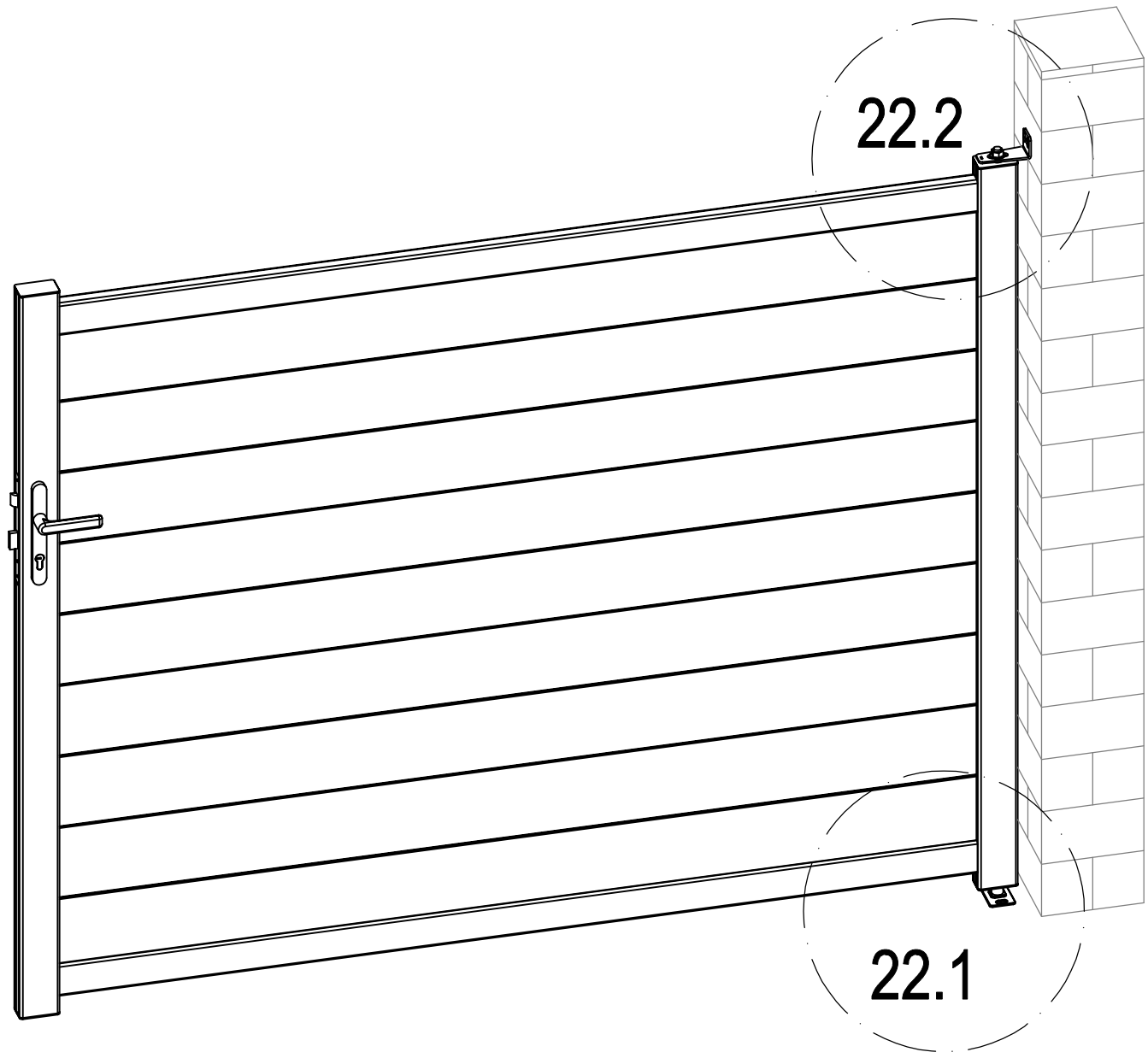

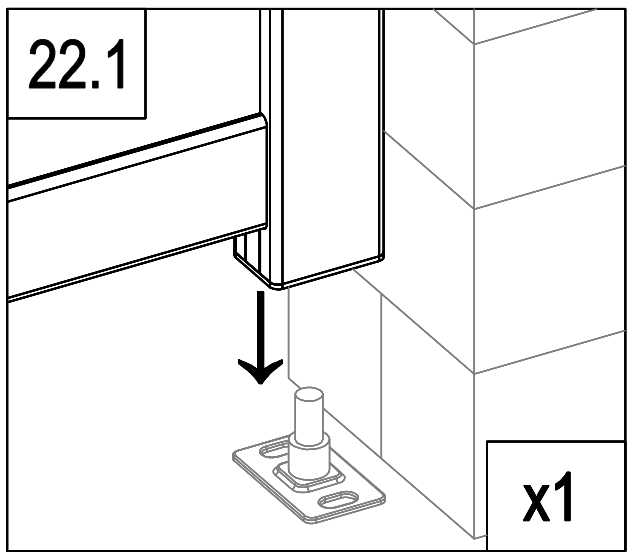

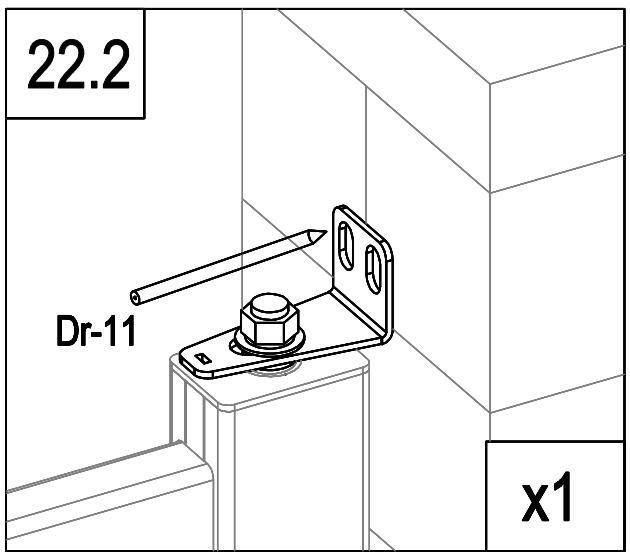

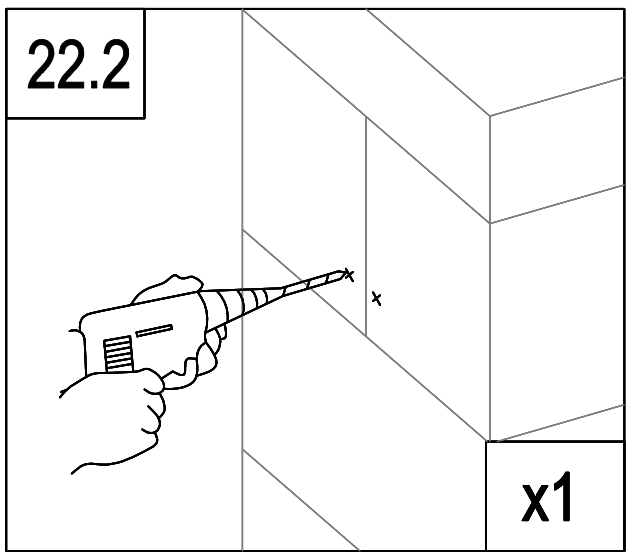

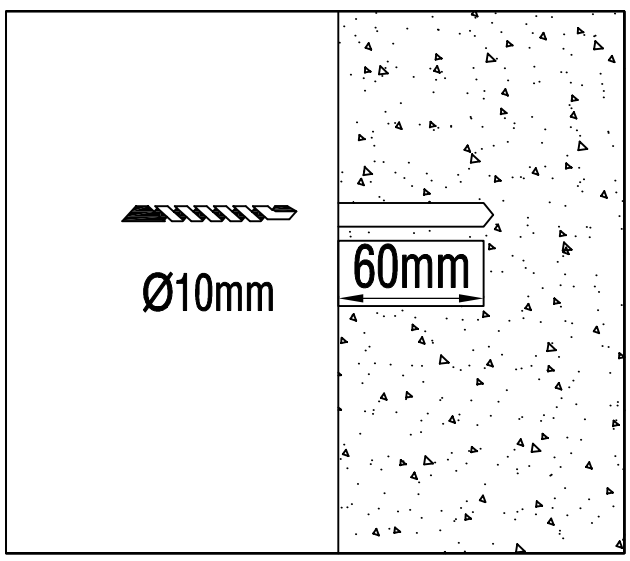

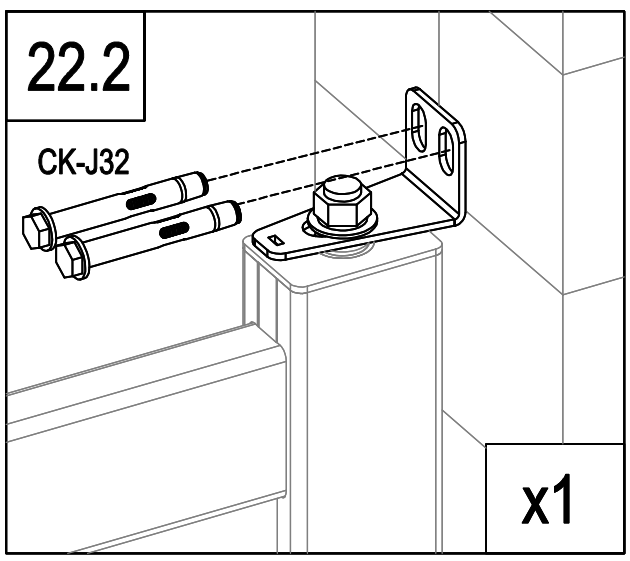

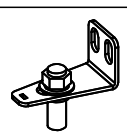	Dr-11	1
	CK-J32	2

22

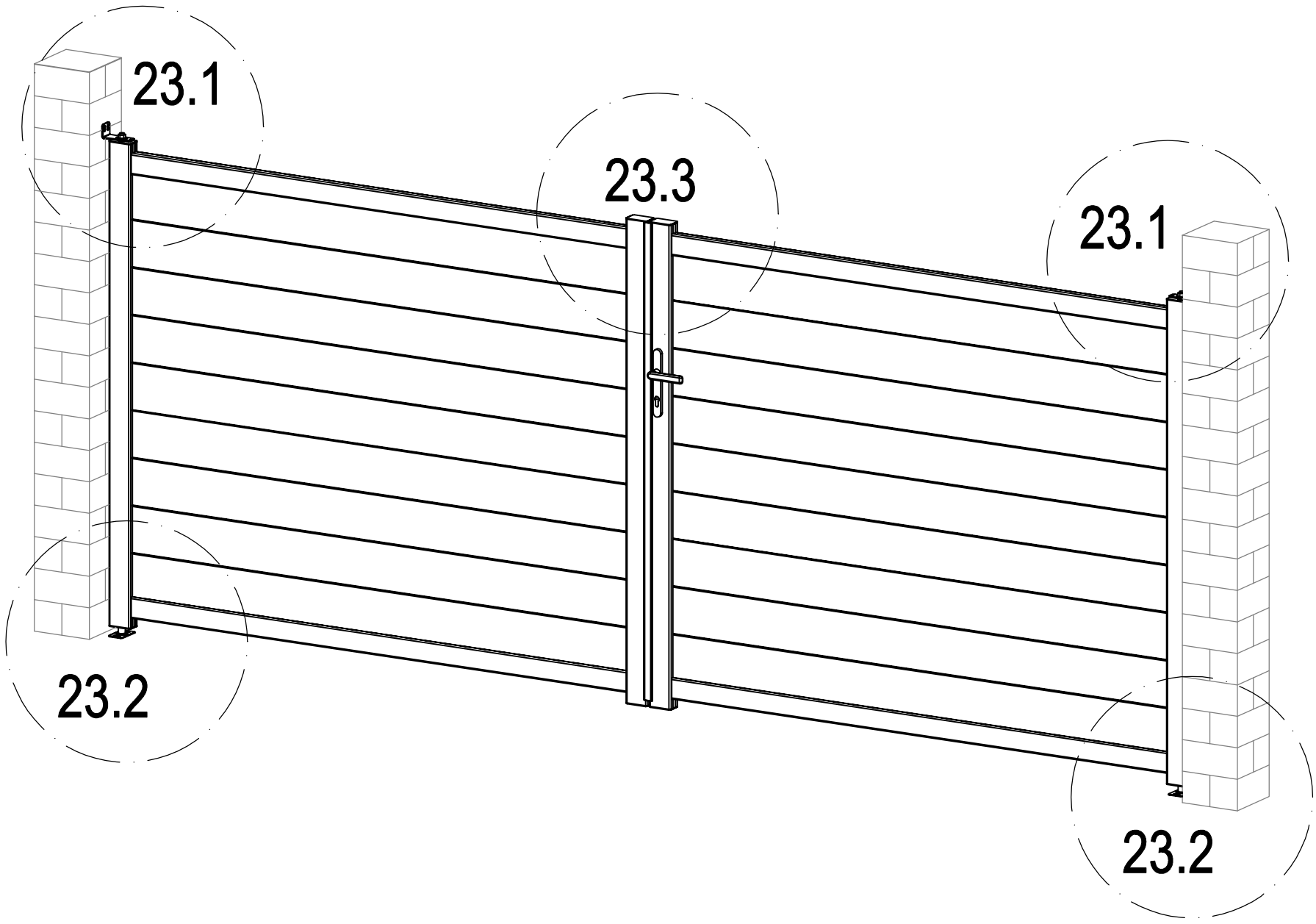

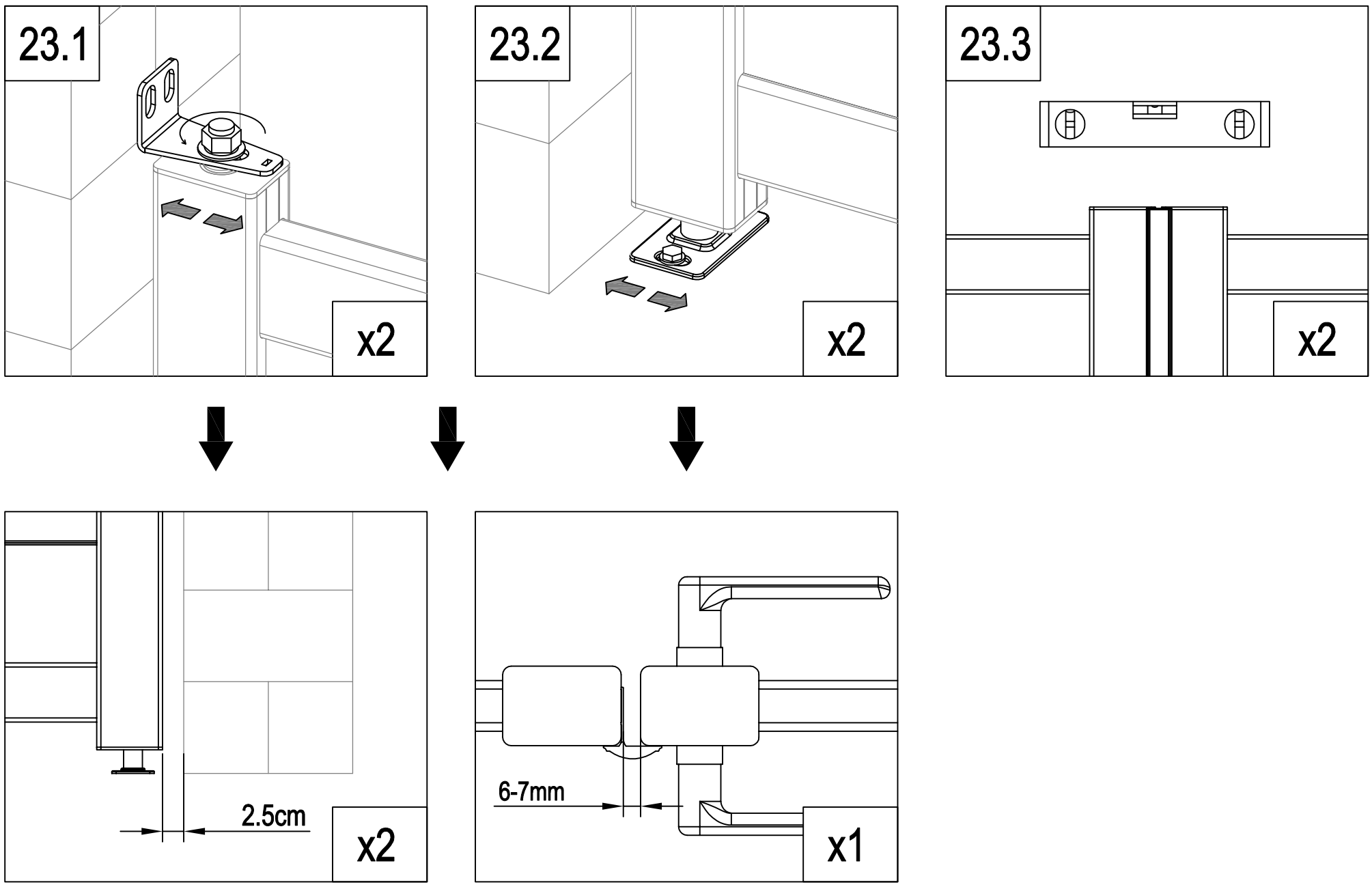

23

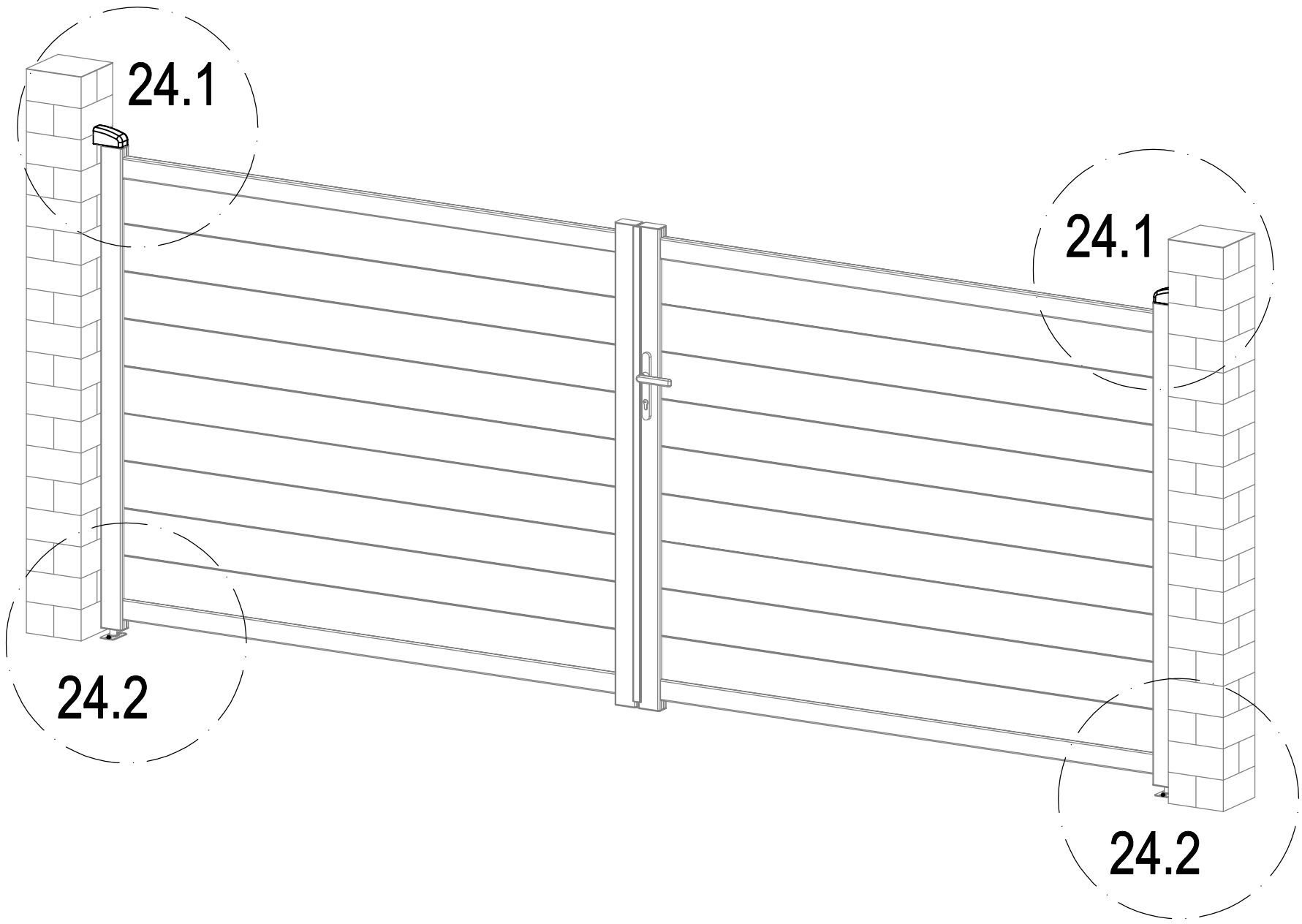

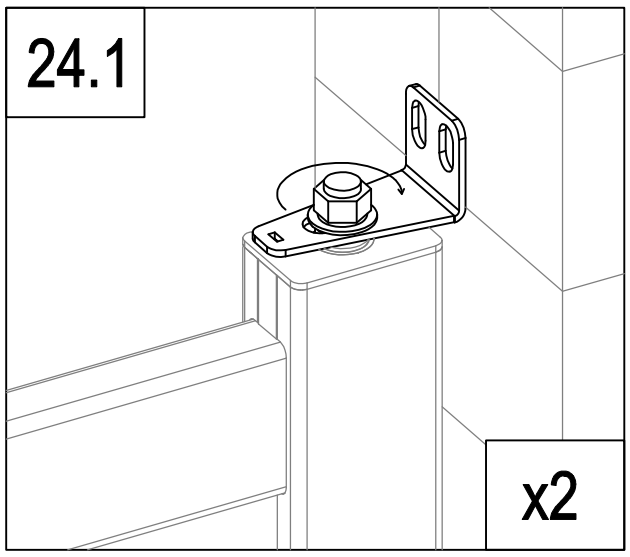

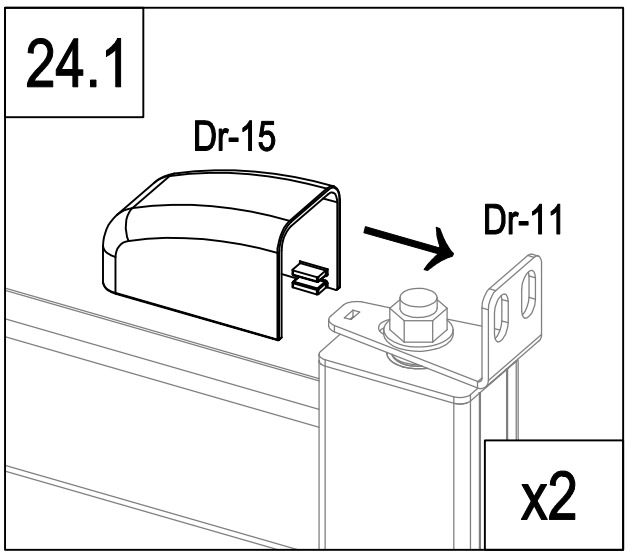

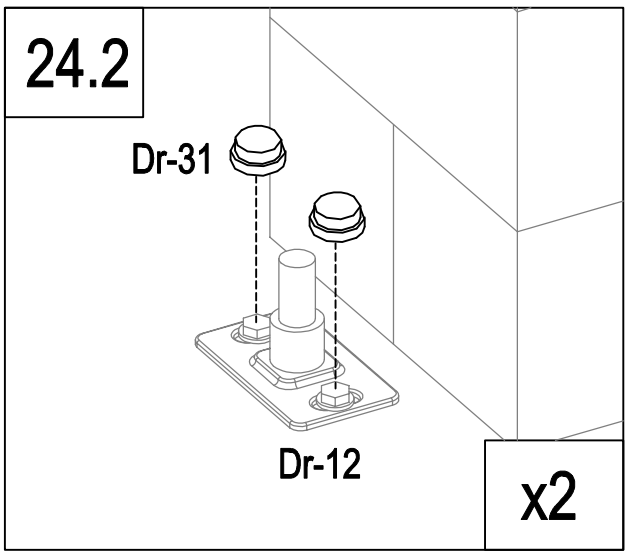

	Dr-15	2
	Dr-31	4

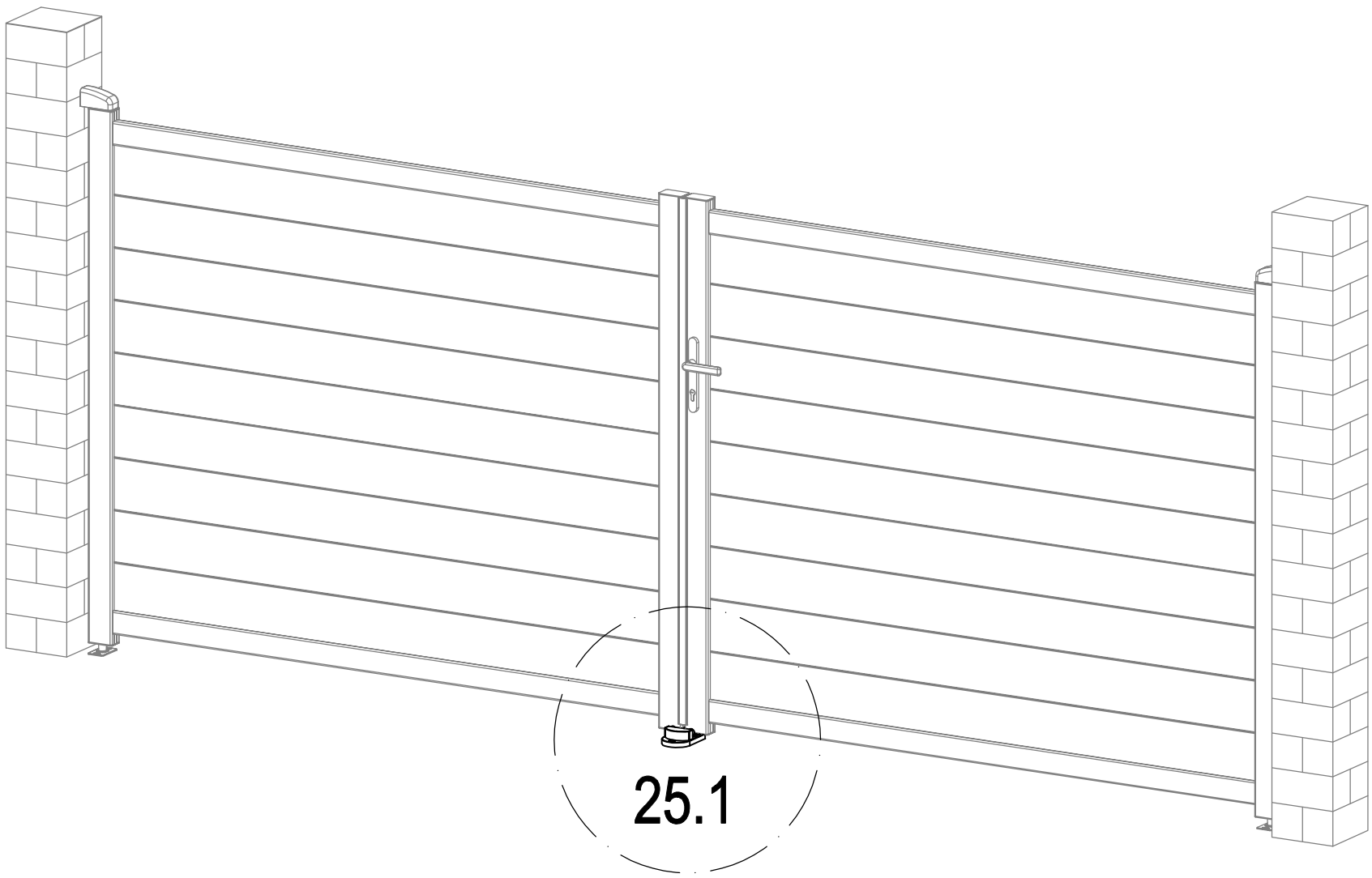

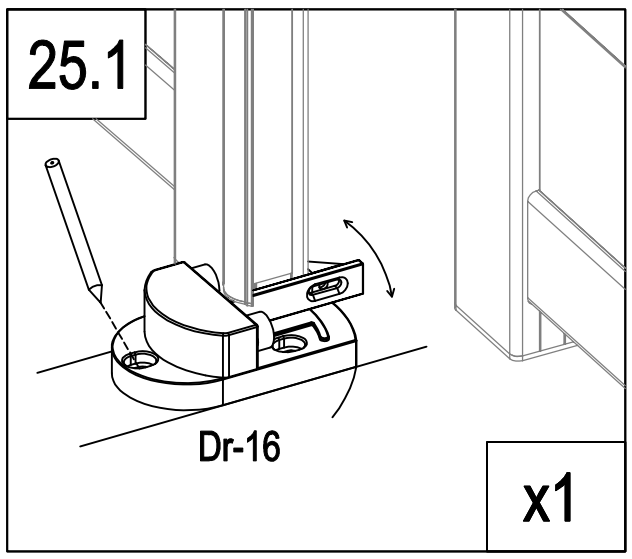

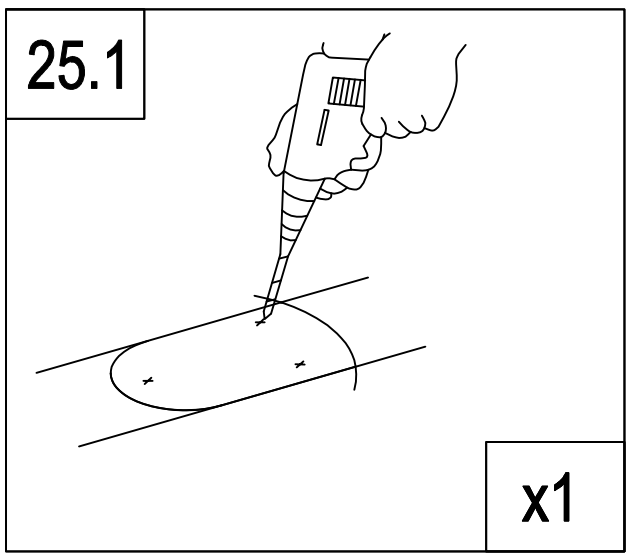

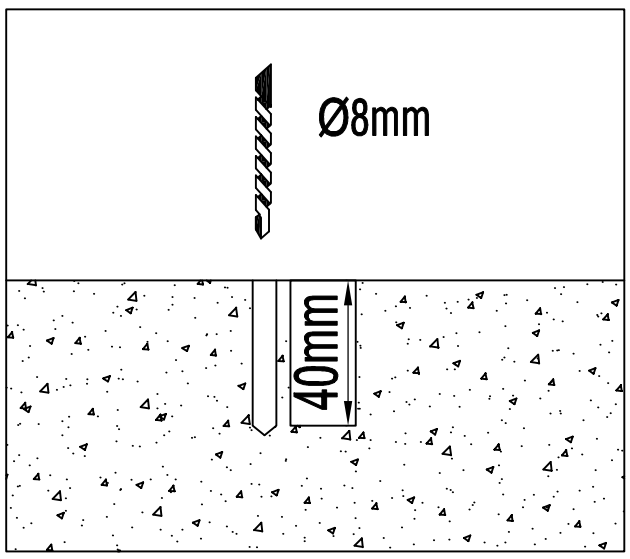

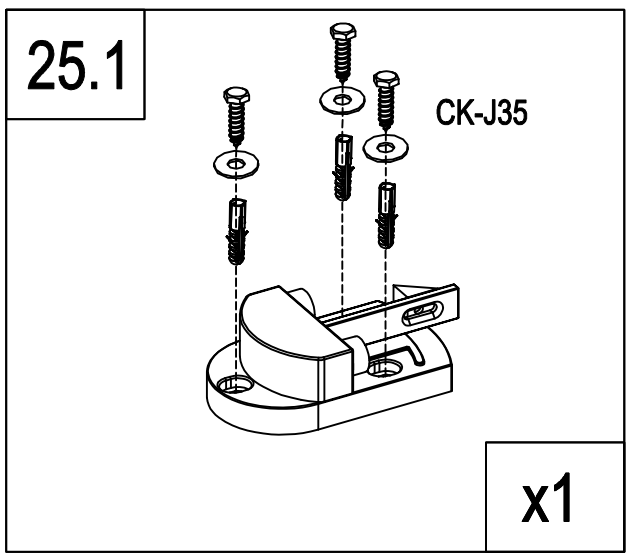

	Dr-16	1
	CK-J34	3
	CK-J35	3

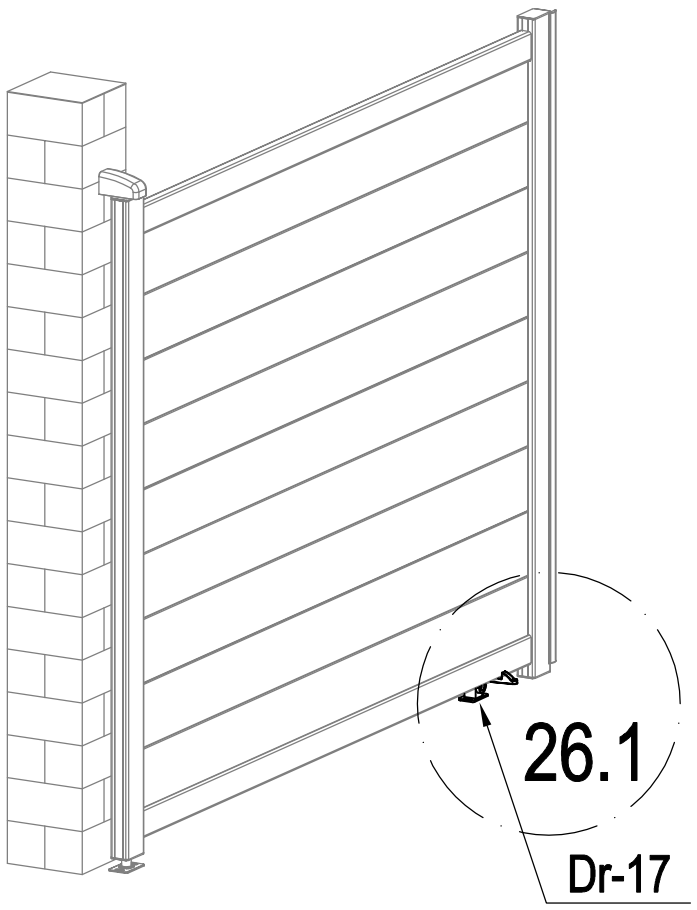

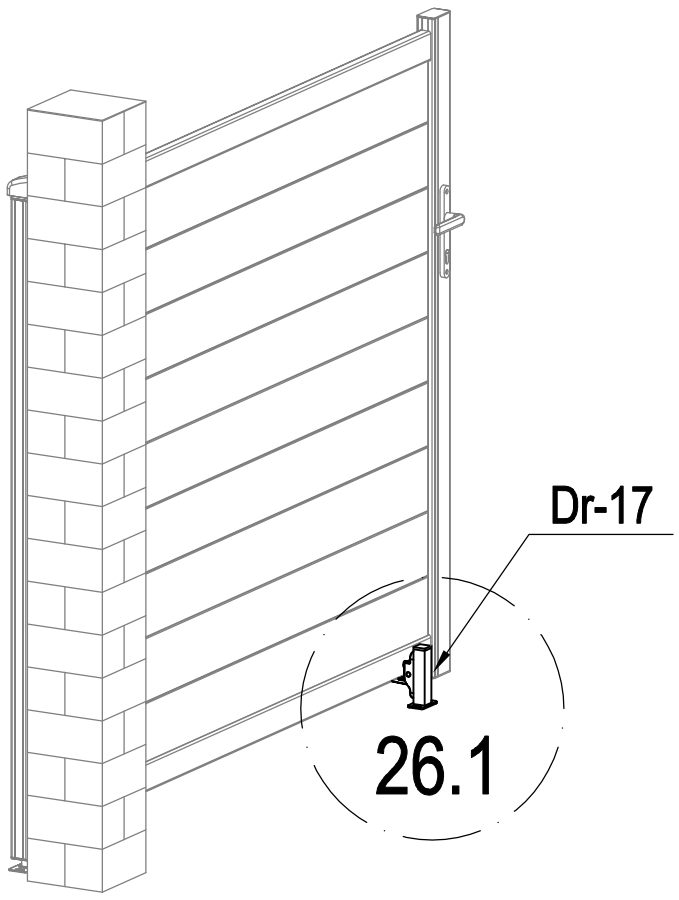

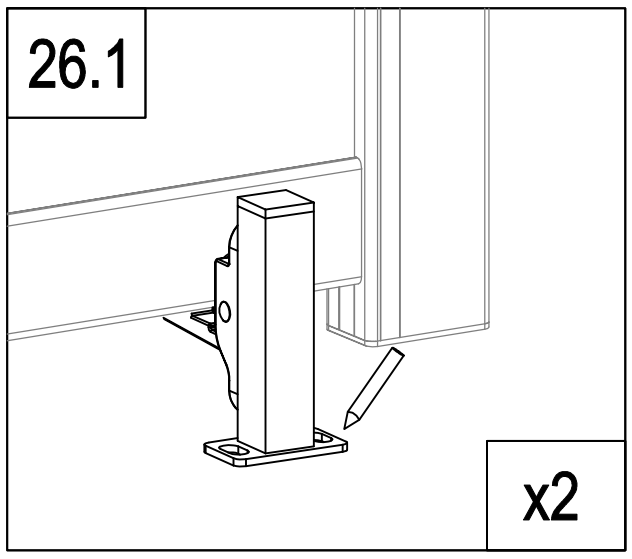

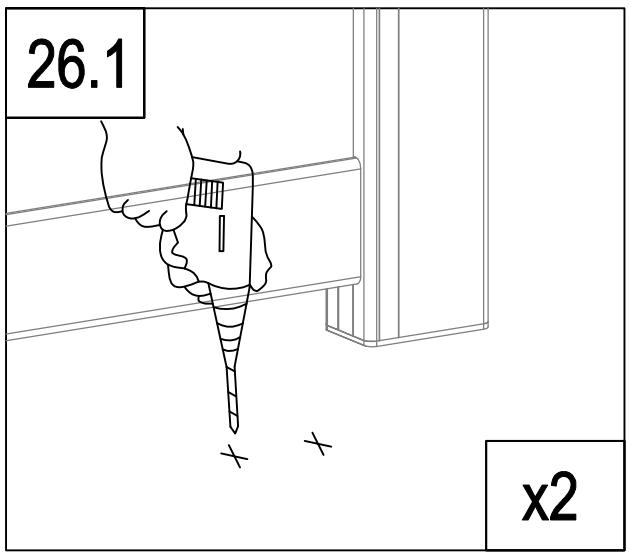

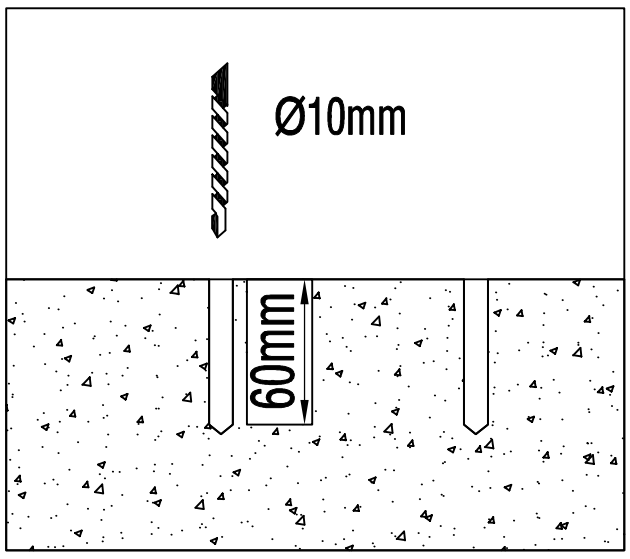

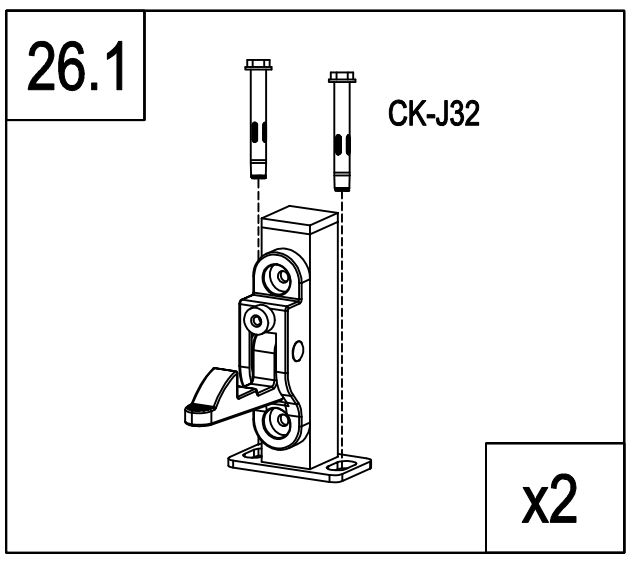

	CK-J32	4
	Dr-17	2